

Made for Motion KTR

Drive Technology

Couplings
Torque limiters
Clamping elements
Torque measuring systems

www.ktr.com

FUTURE WITH A SYSTEM.

KTR have consistently continued to extend their expertise in building systems over the past few decades. Today we are a leading manufacturer providing solutions with highest quality standards in the fields of drive technology, brake and cooling systems as well as hydraulic components to our global business partners.

So what would be more obvious than adapting our company name to this development? KTR Kupplungstechnik GmbH has become KTR Systems GmbH.

The change of name takes account of the growing diversity of our performance range demonstrating the global markets and our customers that we are prepared to take over just more responsibility in machines and plants.

THAT'S WHAT IT IS ALL ABOUT.

KTR has set things in motion for more than 50 years. And since you can go far if you move a lot, KTR has meanwhile become a worldwide leader in the range of drive and fluid technology for industrial applications. Every year several millions of couplings covering a weight from 5 grams to 2 tons or more come off the assembly in KTR performing reliably even under the harshest conditions – on all continents of the earth.



„You can only make big things happen bearing small details in mind."

Andreas Nauen, CEO of KTR





Those who value KTR as a manufacturer will love us as a partner.

It goes without saying that KTR supplies sophisticated products. It may be less obvious that we already supply quality when the product does not yet exist: that is to say as a competent consulting partner and/or sparring partner. On request KTR is there for the customers already during the design stage reverting to the know-how and experience gained from thousands of applications in the field. No matter which question our customers may have: We also advise on site and support you with designing.



We do not conceive ourselves as suppliers, but as solution providers.

Standstill in an industry dealing with motion? That is definitely a no-go for KTR. Although our product portfolio comprises more than 20,000 different couplings and other drive components including brakes and coolers, it only shows part of the options. Specifically with the development of individual solutions KTR makes full use of its strenghts. On behalf of the customer KTR realizes more than 20,000 new developments and product variants some of which become industrial standard every year. Be assured: Together with our sales engineers and the sales team you will always find a tailor-made, cost-effective solution for your application.

Working on the future: the new Power Transmission Center

To make sure that today's drive technology will not be outdated already tomorrow, it must be continuously developed: This is done in the Power Transmission Center. It was opened in Rheine, the location of KTR's headquarters, in April 2015, combining the fields of innovation management, measuring technology, mechatronics and quality management.

An up-to-date R & D center along with a multifunctional assembly hall was built on a total surface of approx. 8,800 square metres. Drive components such as mechanical couplings, torque limiters and torque measuring shafts are developed, assembled and continuously tested here as well as hydraulic components like bellhousings, oil tanks and damping elements.

„We provide for strong connections. In particular with our customers."

Martin Platt, Sales Manager

To ensure a smooth operation, the products are tested and further developed by KTR. For this purpose more than 25 hydraulic and electric test benches are available to the engineers in the PTC. And since nothing is harder than reality, KTR is testing its products under realistic conditions, i. e. conditions similar to operation.

Anyway, KTR's products meet with special demands with external testing, too. One proof for that are the numerous certifications and standards our products were confered in many different fields.

That is how we see ourselves: You can rely on KTR. We disapprove standstill – with us and our customers.

INDEX OF SUBJECTS

A

All-steel gear couplings 104 et seqq.

B

Backlash-free couplings 114 et seqq., 144 et seqq., 158 et seqq., 160 et seqq., 166 et seqq., 176 et seqq.
Ball ratchet couplings 234 et seqq.
Basic programme 32, 86
Bellow-type couplings 144 et seqq.

C

Cam couplings 26 et seqq., 61 et seqq., 118 et seqq.
Clamping hubs 42, 126, 128, 148, 150, 154, 159, 190
Clamping nuts 295
Clamping ring hubs 41, 130 et seqq., 152
Clamping sets 258 et seqq.
Clamping sleeves 270
Coatings 39
Corrosion protection 38, 39, 87, 100
Crowned gear couplings 80 et seqq., 182 et seqq.
Curved-tooth gear couplings 80 et seqq., 182 et seqq.

D

Distance couplings 47 et seqq., 68, 71, 108, 140 et seqq., 170 et seqq.
Double-cardanic shaft couplings 47 et seqq., 87 et seqq., 104 et seqq., 138 et seqq., 160, 162 et seqq.176 et seqq.
Drop-out center design coupling 47 et seqq., 68, 71, 108, 140 et seqq., 170 et seqq.

E

Elastomer couplings 22 et seqq., 98, 114 et seqq., 198 et seqq.,206 et seqq.
External clamping set 288 et seqq.

F

Fail-safe shaft couplings 22 et seqq., 61., 104 et seqq., 118.
Flange couplings 183 et seqq.
Flexible couplings 22 et seqq., 98, 114 et seqq., 198 et seqq., 206 et seqq.

G

Gear couplings 84 et seqq., 104 et seqq., 182 et seqq.

H

Hermetic sealing 210 et seqq.
Highly flexible couplings 98, 198 et seqq.

I

Idle rotating couplings 237-241
Intermediate shafts 51, 97, 110, 141-143, 172
Internal clamping sets 258 et seqq.

K

Kinds of spider hardness 28, 61, 119

L

Lamina couplings 158, 166, 176

M

Magnetic couplings 210 et seqq.
Metal bellow-type couplings 144 et seqq.
Miniature clamping sets 258 et seqq.
Miniature couplings 38, 126 et seqq., 146 et seqq., 158, 160
Mounting flanges 185 et seqq.

O

Overload coupling 224 et seqq.

P

Permanent-magnetic couplings 210 et seqq.
Pin & bush couplings (torsionally flexible) 73 et seqq.
Precision couplings 114 et seqq., 144 et seqq., 158 et seqq., 160 etseqq.
Precision joints 296 et seqq.

R

Rigid shaft couplings 292

S

Safety couplings 224 et seqq.
Safety couplings with retaining elements 234 et seqq.
Servo couplings 114 et seqq., 144 et seqq., 158 et seqq., 160 et seqq.
Servo lamina couplings 158 et seqq.
Shaft couplings 26 et seqq., 61 et seqq. 69 et seqq., 73 et seqq., 84 et seqq., 104 et seqq., 118 et seqq., 144 et seqq., 158-161, 166 et seqq., 176 et seqq., 214 et seqq.
Shaft couplings made of steel 104 et seqq., 148 - 151, 162 et seqq.
Shaft encoder couplings 126, 146, 160
Shaft-hub-connections 258 et seqq.
Shear pin couplings 58
Shear type couplings 46, 47, 69
Shell drop-out center design couplings 44, 45, 47, 48, 96, 136, 140
Shifting hubs 55, 92 et seqq., 113
Stock programme of finish bores 32, 86
Spacer couplings Spacer couplings
Speed measuring shafts 308 et seqq.
Spiders 28, 61, 119
Stainless steel couplings 39, 100
Steel lamina couplings 158, 166, 176

T

Taper clamping bushes 40, 64
Taper clamping ring hubs 41, 130 et seqq., 152
Torque limiters 224 et seqq.
Torque measuring shafts 308 et seqq.
Torsionally flexible couplings 23 et seqq.
Torsionally rigid couplings 292
Torsionally stiff couplings 114 et seqq., 144 et seqq., 159 et seqq.

U

Use with explosion-proof applications 9, 25, 83, 117, 165, 185, 213
Universal clamping sets 258 et seqq.

Summary of products

Couplings

Flexible jaw and pin & bush couplings	22
Gear couplings	80
Backlash-free servo couplings	114
Steel lamina couplings	166
Flange couplings	186
Magnetic couplings	214

Torque limiters

Torque limiters	232
Overload systems	240
Backlash-free overload systems	246

Clamping elements and precision joints

Clamping sets	262
Clamping nut	299
Precision joints	300

Torque measuring technology

Torque measuring shafts	308



SUMMARY OF PRODUCTS / SPECIFICATIONS

	Max. torque [Nm]	Max. circumfer. speed [m/s]	Max. bore diameter [mm]	Torsionally rigid	Flexible	Highly torsionally flexible	Backlash-free	Maintenance-free	Fail-safe	Shear type	Compact dimensions	Double-cardanic	Single-cardanic	High
COUPLINGS														
Flexible jaw and pin & bush couplings														
ROTEX®	35.000	60	200		■			■	■		■	■	■	■
POLY-NORM®	67.000	35	280		■			■	■		■		■	
POLY	6.100	35	145		■			■		■			■	
REVOLEX® KX-D	1.220.000	60	650		■		■	■	■		■		■	■
Gear couplings														
BoWex®	2.500	30	125	■				■		■	■	■	■	
BoWex® HEW Compact	5.000		125			■		■		■	■		■	
GEARex®	2.750.000	–	520	■					■		■	■		■
Backlash-free servo couplings														
ROTEX® GS	5.850	80	110		■		■	■	■		■	■	■	■
TOOLFLEX®	600	40	65	■			■	■		■	■	■		
RADEX®-NC	300	35	55	■			■	■			■	■	■	
COUNTEX®	1	40	14	■			■	■			■	■		
Steel lamina couplings														
RADEX®-N	280.000	65	330	■			■	■			■	■	■	
RIGIFLEX®-N	280.000	100	400	■			■	■			■	■		
RIGIFLEX®-HP	330.000	200	380	■			■	■			■	■		
Flange couplings for I.C.- engines														
BoWex® FLE-PA / FLE-PAC	5.300	50	125	■				■		■	■		■	
MONOLASTIC®	1.500	50	60		■			■		■	■		■	
BoWex-ELASTIC®	45.000		275			■		■		■	■		■	
Magnetic couplings														
MINEX®-S	1.000		90		■			■						
TORQUE LIMITERS														
RUFLEX®	12.000		140								■			■
KTR-SI	8.200		100											
KTR-SI FRE	60.000		200											
SYNTEX®	400		50				■				■			
SYNTEX®-NC	550		60				■				■			■
KTR-SI Compact	3.100		80				■							
CLAMPING SETS														
CLAMPEX®	7.394.000		1.000				■	■			■			■
TORQUE MEASURING SHAFTS														
DATAFLEX®	50.000	–	–	■			■	■						

For legend of certificate please refer to flapper on the cover

...r power density	Axial plug-in	All-steel	Contactless	Friction coupling	Ratchet coupling	Self-centering	Not self-centering	ATEX	GOST R/GOST TR	Bureau Veritas	American Bureau of Shipping	DNV GL	Coupling selection acc. to DIN 740 part II (p. 10 et seqq.)	Coupling selection based on operating factors (p. 14 et seqq.)	Coupling selection acc. to DIN 740 part II with spec. factors (p. 18 et seqq.)	Product pages from page
■								■	■	■	■	■	■			26
■								■	■				■			61
■								■	■				■			69
■								■	■	■	■	■		■		73
■								■	■	■		■	■			84
■								■	■			■	■			98
	■							■		■	■	■		■		104
■								■							■	118
■	■														■	144
								■							■	162
■								■							■	164
	■							■	■	■	■	■		■		170
	■							■	■	■	■	■		■		180
	■							■	■	■	■	■		■		183
■									■	■			■			190
■									■				■			202
■								■	■	■	■	■	■			206
		■						■								216
			■													232
	■			■												240
	■			■												243
				■												246
				■												254
	■			■												259
					■	■			■			■				264
		■														310

COUPLING SELECTION ACCORDING TO DIN 740 PART II

Coupling types

Flexible jaw couplings

ROTEX®

Flexible coupling **(see page 24)**



– Flexible
– Maintenance-free
– Fail-safe
– Compact dimensions
– Axial plug-in

POLY-NORM®

Flexible coupling (see page 24)



– Flexible
– Maintenance-free
– Fail-safe
– Compact dimensions
– Axial plug-in

POLY

Flexible, shear-type coupling (see page **24)**



– Flexible
– Maintenance-free
– Shear type
– Axial plug-in

Gear couplings

BoWex®

Torsionally rigid curved-tooth gear coupling®, **(see page 82)**



– Torsionally rigid
– Maintenance-free
– Shear type
– Compact dimensions
– Single-cardanic or double-cardanic
– Axial plug-in

BoWex® HEW Compact

Highly flexible shaft coupling **(see page 82)**



– Highly flexible
– Maintenance-free
– Shear type
– Compact dimensions
– Single-cardanic
– Axial plug-in

Flange couplings for I.C.- engines

BoWex-ELASTIC®

Highly flexible flange coupling **(see page 188)**



– Flexible to highly flexible
– Maintenance-free
– Shear type
– Compact dimensions
– Single-cardanic
– Axial plug-in

MONOLASTIC®

One-piece, flexible flange coupling **(see page 188)**



– Flexible
– Maintenance-free
– Shear type
– Compact dimensions
– Single-cardanic
– Axial plug-in

BoWex® FLE-PA (PAC)

Torsionally rigid flange coupling (see page **188)**



– Torsionally rigid
– Maintenance-free
– Shear type
– Compact dimensions
– Single-cardanic
– Axial plug-in

COUPLING SELECTION ACCORDING TO DIN 740 PART II

Terminology of coupling selection

Description	Symbol	Definition or explanation
Rated torque of coupling [Nm]	T_{KN}	Torque that can be continuously transmitted over the entire permissible speed range.
Maximum torque of coupling [Nm]	$T_{K\ max.}$	Torque that can be transmitted as dynamic load ≥ 10^5 times or 5 x 10^4 as vibratory load, respectively, over the entire operating life of the coupling
Vibratory torque of coupling [Nm]	T_{KW}	Torque amplitude of the permissible periodical torque fluctuation with a frequency of 10 Hz and a basic load of TKN or dynamic load up to TKN, respectively
Damping power of coupling [W]	P_{KW}	Permissible damping power with an ambient temperature of + 30 °C.
Rated torque of machine [Nm]	T_N	Stationary rated torque on the coupling
Rated torque of driving side [Nm]	T_{AN}	Rated torque of machine, calculated from rated power and rated speed
Rated torque of load side [Nm]	T_{LN}	Maximum figure of the load torque calculated from power and speed
Peak torque of machine [Nm]	T_S	Peak torque on the coupling
Peak torque of driving side [Nm]	T_{AS}	Peak torque with torque shock on driving side, e. g. tilting moment of the electric motor.
Peak torque of load side [Nm]	T_{LS}	Peak torque with torque shock on load side, e. g. braking
Vibratory torque of machine [Nm]	T_W	Amplitude of the vibratory torque effective on the coupling

Description	Symbol	Definition or explanation
Damping power of machine [W]	P_W	Damping power which is effective on the coupling due to the load generated by the vibratory torque
Engine power [kW]	P	Rated power of drive
Speed [rpm]	n	Rated speed of engine
Rotational inertia coefficient of driving side	M_A	Factor taking into account the mass distribution with shocks and vibrations generated on the driving or load side
Rotational inertia coefficient of load side	M_L	
Mass moment of inertia of driving side [kgm²]	J_A	Total of moments of inertia existing on the driving or load side referring to the coupling speed
Mass moment of inertia of load side [kgm²]	J_L	
Mass moment of inertia of coupling [kgm²]	J_{KA}	Mass mom. of inertia of the coupl. half on the drive side
	J_{KL}	Mass mom. of inertia of the coupl. half on the load side
Starting factor	S_Z	Factor considering the additional load caused by the starting frequency per minute.
Shock factor on driving side	S_A	Factor taking into account the shocks arising depending on the application (e. g. starting shocks)
Shock factor on load side	S_L	
Temperature factor	S_t	Temperature factor – Factor considering the lower loading capacity or larger deformation of an elastomer part under load particularly in case of increased temperatures.
Operating factor	S_B	Factor considering the different demands on the coupling dependent on the application.
Screw tightening torque [Nm]	T_A	Screw tightening torque

Temperature factor S_t

	-50 °C	-30 °C /+30 °C	≤ +40 °C	≤ +50 °C	≤ +60 °C	≤ +70 °C	≤ +80 °C	≤ +90 °C	≤ +100 °C	≤ +110 °C	≤ +120 °C
ROTEX®											
T-PUR®	1,0	1,0	1,1	1,2	1,3	1,45	1,6	1,8	2,1	2,5	3,0
PUR	–	1,0	1,2	1,3	1,4	1,55	1,8	2,2	–	–	–
POLY-NORM®											
NBR 78 Shore A	–	1,0	1,2	1,3	1,4	1,6	1,8	–	–	–	–
POLY											
NBR (building block)	–	1,0	1,2	1,3	1,4	1,6	1,8	–	–	–	–
BoWex®											
PA 6.6	1,0	1,0	1,0	1,0	1,0	1,2	1,4	1,6	1,8	–	–
PA-CF	1,0	1,0	1,0	1,0	1,0	1,1	1,2	1,4	1,6	1,9	2,2
BoWex® HEW Compact	–	1,0	1,0	1,0	1,0	1,1	1,4	1,7	–	–	–
BoWex® ELASTIC®											
Standard	–	1,0	1,0	1,0	1,0	1,2	1,6	–	–	–	–
Temperature stable M.*	–	1,0	1,0	1,0	1,0	1,1	1,4	1,7	–	–	–
MONOLASTIC®											
Standard	–	1,0	1,0	1,0	1,0	1,2	1,6	–	–	–	–
BoWex® FLE-PA (PAC)											
PA 6 GF	1,0	1,0	1,0	1,0	1,0	1,0	1,0	1,2	1,4	1,6	1,8
PA-CF	1,0	1,0	1,0	1,0	1,0	1,1	1,2	1,4	1,6	1,9	2,2

* Temperature stable compound is marked with „T“ in front of hardness (e. g. T 50 Sh)
For the selection with PEEK spider a temperature factor is not necessary.
For temperature factors for PA spiders see page 30.

Starting factor S_Z

ROTEX®, POLY-NORM®, POLY, BoWex®, BoWex® HEW Compact				
Starting frequency per hour	< 100	< 200	< 400	< 800
S_Z	1,0	1,2	1,4	1,6
BoWex-ELASTIC®				
Starting frequency per hour	< 10	< 60	< 120	> 120
S_Z	1,0	1,5	2,0	auf Anfrage

Shock factor S_A/S_L

ROTEX®, POLY-NORM®, POLY, BoWex®, BoWex® HEW Compact, BoWex-ELASTIC®	S_A/S_L
Moderate shocks	1,5
Average shocks	1,8
Heavy shocks	2,5

Operating factor S_B

Hydrostatic drives for BoWex® FLE-PA, MONOLASTIC®	
Applications	S_B
Wheel loaders	1,6
Compact loaders	1,6
Hydraulic excavators	1,4
Mobile cranes	1,6
Graders	1,5
Vibration rollers	1,4
Fork lift trucks	1,6
Concrete mixer trucks	1,3
Concrete pumps	1,4
Asphalt finishers	1,4
Concrete cutters	1,4
Road milling machines	1,4

Permissible load on feather key of the coupling hubs

The shaft-hub-connection has to be verified by the customer.

Permissible surface pressure according to DIN 6892 (method C).			
Cast iron GJL	225 N/mm²	Powder metal steel	180 N/mm²
Nodular iron GJS	225 N/mm²	Aluminium diecast Al-D	110 N/mm²
Steel	250 N/mm²	Aluminium semi-finished product Al-H	200 N/mm²
Polyamide	30 N/mm² (up to + 40 °C)	For other steel materials $p_{perm.}$	0,9 • R_e ($R_{p0.2}$)

COUPLING SELECTION ACCORDING TO DIN 740 PART II

Coupling selection

The coupling selection is based on DIN 740 part 2. The coupling has to be dimensioned such that the permissible coupling load is not exceeded during any operating condition. For this purpose the actual loads have to be compared to the permissible parameters of the coupling. The torques specified T_{KN} /$T_{K\,max.}$ refer to the couplings. The shaft-hub-connection has to be investigated by the customer.

1. Drives without periodical torsional vibrations

For example centrifugal pumps, fans, screw compressors, etc. The coupling selection is based on reviewing the rated torque T_{KN} and the maximum torque $T_{K\,max.}$

1.1 Loading generated by rated torque

Considering the ambient temperature the permissible rated torque T_{KN} of the coupling must at least equal the rated torque T_N of the machine.

$$T_N\,[Nm] = 9550 \bullet \frac{P\,[kW]}{n\,[rpm]}$$

$$T_{KN} \geq T_N \bullet S_t$$

1.2 Loading generated by torque shocks

The permissible maximum torque of the coupling $T_{K\,max.}$ must at least equal the sum of the peak torque T_S and rated torque of the machine T_N taking into account the shock frequency S_Z and the ambient temperature S_t. This applies in case if the rated torque of the machine T_N is superimposed by a shock process. Knowing the mass distribution, direction and kind of shock it is possible to calculate the peak torque T_S.

$$T_{K\,max.} \geq T_S \bullet S_z \bullet S_t + T_N \bullet S_t$$

Shock on drive side

$$T_S = T_{AS} \bullet M_A \bullet S_A$$

Shock on load side

$$T_S = T_{LS} \bullet M_L \bullet S_L$$

$$M_A = \frac{J_L}{(J_A + J_L)}$$

$$M_L = \frac{J_A}{(J_A + J_L)}$$

For drives with A. C. motors and big masses on the load side we recommend to do a calculation of the peak starting torque by our simulation program.

2. Drives with periodical torsional vibrations

For drives subject to torsional vibrations, e. g. diesel engines, piston compressors, piston pumps, generators etc. it is necessary to perform a torsional vibration calculation for a selection ensuring a safe operation. If requested, we will do the torsional vibration calculation and the coupling selection in our company. For the necessary details refer to KTR standard 20004.

2.1 Loading generated by rated torque

Considering the ambient temperature the permissible rated torque T_{KN} of the coupling must at least equal the rated torque of the machine T_N.

$$T_{KN} \geq T_N \bullet S_t$$

2.2 Passing through the resonance range

Considering the temperature the peak torque T_S arising when passing through the resonance range must not exceed the maximum torque $T_{K\,max.}$ of the coupling.

$$T_{K\,max.} \geq T_S \bullet S_t$$

2.3 Loading generated by vibratory torque shocks

Considering the ambient temperature the permissible vibratory torque T_{KW} of the coupling must not be exceeded by the biggest periodical vibratory torque T_W with operating speed. With higher operating frequencies f > 10 Hz the heat generated by damping in the elastomer is considered as damping power P_W. The permissible damping power P_{KW} of the coupling depends on the ambient temperature and must not be exceeded by the damping power generated.

$$T_{KW} \geq T_W \bullet S_t$$

$$P_{KW} \geq P_W$$

With torsionally rigid couplings the damping power can be neglected.

Coupling selection for BoWex® FLE-PA and MONOLASTIC®

1. Loading by rated torque

For drives with small mass moments on the load side (hydrostatic drives) the selection can be simplified using operating factors.

$$T_{KN} \geq T_N \bullet S_B \bullet S_t$$

Please note:

For drives subject to high torsional vibrations, e.g. diesel engines, piston compressors, piston pumps, generators, etc., it is necessary to perform a torsional vibration calculation to ensure a safe operation. This applies in particular with large mass moments of inertia on the load side. If requested, we perform the torsional vibration calculation and the coupling selection in our company.

COUPLING SELECTION ACCORDING TO DIN 740 PART II

Example of calculation

Requested: Axial-plug in coupling damping vibrations → ROTEX®

Application: Connection of IEC standard motor and screw compressor

→ Coupling selection following page 12, item 1: Drives without periodical torsional vibrations

Given: Details of driving side

Rotary current motor:	Size 315 L	→ S_A =1.8 (see page 11)
Motor output:	P = 160 kW	
Speed:	n = 1485 rpm	
Moment of inertia of driving side:	J_{Motor} = 2.9 kgm²	
Starting frequency:	6 times per hour	→ S_Z =1.0 (see page 11)
Ambient temperature:	+ 70 °C	→ S_t =1.45 using T-PUR® (see page 11)
Peak torque (starting torque) T_{AS}	= 2 • T_{AN}	

Given: Details of load side

Screw compressor

Rated torque of load side:	T_{LN} = 930 Nm
Moment of inertia of load side:	$J_{compressor}$ = 6.8 kgm²

Calculation

1.1 Loading by rated torque

- Rated torque of drive T_{AN}

$$T_{AN} = 9550 \bullet \frac{P\,[kW]}{n\,[rpm]} \rightarrow 9550 \bullet \frac{160\ kW}{1485\ rpm} = \underline{1029\ Nm}$$

- Rated torque of load side T_{LN}

$$T_{KN} \geq T_{LN} \bullet S_t \rightarrow 930\ Nm \bullet 1.45 = 1348.5\ Nm \rightarrow T_{KN} \geq \underline{1348{,}5\ Nm}$$

- Coupling selection

  ROTEX® Size 90 - spider 92 Shore A with:

  T_{KN} = 2400 Nm

  $T_{K\,max.}$ = 4800 Nm

  Mass moments of inertia of page 59

  J_{KA} = 0,0673 kgm²

  J_{KL} = 0,0673 kgm²

1.2 Loading by torque shocks

- Shock on driving side without load torque being overlapping

$T_{K\,max.} \geq T_S \bullet S_Z \bullet S_t + T_N \bullet S_t \rightarrow T_N = 0$

Shock on driving side $T_S = T_{AS} \bullet M_A \bullet S_A$

$$M_A = \frac{J_L}{(J_A + J_L)} \rightarrow \frac{6{,}8673\ kgm^2}{2{,}9673\ kgm^2 + 6{,}8673\ kgm^2} \rightarrow M_A = = \underline{0{,}7}$$

$J_A = J_{Motor} + J_{KA}$ → 2,9 kgm² + 0,0673 kgm² → $J_A = \underline{2{,}9673\ kgm^2}$

$J_L = J_{compressor} + J_{KL}$ → 6,8 kgm² + 0,0673 kgm² → $J_L = \underline{6{,}8673\ kgm^2}$

Starting torque $T_{AS} = 2 \bullet T_{AN}$ → 2 • 1029 Nm= $\underline{2058\ Nm}$

→ Shock on driving side T_S = 2058 • 0,7 • 1,8 = $\underline{2593{,}1\ Nm}$

→ $T_{K\,max.} \geq 2593{,}1\ Nm \bullet 1 \bullet 1{,}45 = \underline{3760\ Nm}$

$T_{K\,max.}$ with 4800 Nm ≥ 3760 Nm ✓

Result

The coupling is sufficiently dimensioned.

Please note:

The shaft-hub-connection has to be verified by the customer separately.

COUPLING SELECTION BASED ON OPERATING FACTORS

Coupling types

Lamina couplings

RADEX®-N

Steel lamina coupling (see page 168)



- Torsionally rigid
- Backlash-free
- Maintenance-free
- Compact dimensions
- Single-cardanic or double-cardanic
- All-steel

RIGIFLEX®-N

Steel lamina coupling (see page 168)



- Torsionally rigid
- Backlash-free
- Maintenance-free
- Double-cardanic
- All-steel
- Coupling in accordance with API 610, API 671 optionally

RIGIFLEX®-HP

High-performance steel lamina coupling (see page 168)



- Torsionally rigid
- Backlash-free
- Maintenance-free
- Double-cardanic
- All-steel
- Coupling design as per API 671

Pin & bush couplings

REVOLEX® KX-D

Flexible pin & bush coupling (see page 73)



- Flexible
- Maintenance-free
- Fail-safe
- Compact dimensions
- Axial plug-in

Gear couplings

GEARex®

All-steel gear coupling (see page 82)



- Torsionally rigid
- Fail-safe
- Compact dimensions
- Double-cardanic
- High power density
- All-steel

Terminology of coupling selection

Description	Symbol	Definition or explanation
Rated torque of coupling [Nm]	T_{KN}	Torque that can be continuously transmitted over the entire permissible speed range.
Maximum torque of coupling [Nm]	$T_{K\ max.}$	Torque that can be transmitted as dynamic load ≥ 10^5 times or 5 x 10^4 as vibratory load, respectively, over the entire operating life of the coupling
Vibratory torque of coupling [Nm]	T_{KW}	Torque amplitude of the permissible periodical torque fluctuation with a frequency of 10 Hz and a basic load of T_{KN} or dynamic load up to T_{KN}, respectively
Rated torque of machine [Nm]	T_N	Stationary rated torque on the coupling
Peak torque of machine [Nm]	T_S	Peak torque on the coupling

Description	Symbol	Definition or explanation
Engine power [kW]	P	Rated power of drive
Speed [rpm]	n	Rated speed of engine
Starting factor	S_Z	Factor taking into account load caused by starting frequency per hour
Direction factor	S_R	Considers the torsional direction
Temperature factor	S_t	Temperature factor – Factor considering the lower loading capacity particularly in case of increased temperatures.
Operating factor	S_B	Factor considering the different demands on the coupling dependent on the application.

COUPLING SELECTION BASED ON OPERATING FACTORS

Factors

Temperature factor S_t

	–30 °C +30 °C	≤ +40 °C	≤ +60 °C	≤ +80 °C	≤ +150 °C	≤ +200 °C	≤ +230 °C	≤ +270 °C
REVOLEX® KX-D	1,0	1,2	1,4	1,8	–	–	–	–
GEARex®	1,0	1,0	1,0	1,0	–	–	–	–
RADEX®-N, RIGIFLEX®-N, RIGIFLEX®-HP	1,0	1,0	1,0	1,0	1,0	1,10	1,25	1,43

Starting factor S_Z

Starting frequency per hour	<10	<25	<50
S_Z	1,0	1,2	1,4

Direction factor S_R

Same torsional direction	1,0
Alternating torsional direction	1,7

Operating factor S_B

Application		Application	
Construction machines		**Mixers**	
Manoeuvre winches	1,50 – 2,00	Constant density	1,75 – 2,25
Swing gears	1,50 – 2,00	Variable density	2,00 – 2,50
Miscellaneous winches	1,50 – 2,00	**Grinders**	
Filters, cable winches	1,75 – 2,25	Centrifugal mills	1,75 – 2,00
Multi-bucket excavators	1,75 – 2,25	Beater mills	1,75 – 2,00
Running gears (caterpillars)	1,75 – 2,25	Autogenous mills	1,75 – 2,00
Impellers	1,75 – 2,25	Hammer and ball mills	2,00 – 2,50
Cutter drives	2,00 – 2,50	**Food industry**	
Elevators	1,50 – 2,00	Sugarcane harvesters	1,25 – 1,50
Conveyors		Sugar-beet harvesters	1,25 – 1,50
Bucket elevators	1,50 – 2,00	Sugar-beet washing	1,25 – 1,50
Elevators	1,75 – 2,25	Kneading machines	1,75 – 2,00
Hauling winches	1,50 – 2,00	Sugarcane breakers	1,75 – 2,00
Apron conveyors	1,25 – 1,75	Sugarcane mills	1,75 – 2,00
Rubber belt conveyors (bulk)	1,25 – 1,75	**Oil industry**	
Boom plate bucket conveyors	1,25 – 1,75	Filter presses for paraffin	1,50 – 2,00
Rotary conveyors	1,50 – 1,75	Rotary furnaces	1,75 – 2,00
Steel plate conveyors	1,50 – 1,75	**Paper machines**	
Worm conveyors	1,25 – 1,50	Couch rolls	1,75 – 2,25
Steel belt conveyors	1,75 – 2,00	Calanders	1,75 – 2,25
Conveyors	1,75 – 2,00	Wet presses	1,75 – 2,25
Rubber belt conveyor (bulk)	1,75 – 2,00	**Pumps**	
Inclined lifts	1,75 – 2,00	Radial pumps	1,25 – 1,75
Shaking slides	2,00 – 2,25	Centrifugal pumps (light liquid)	1,50 – 2,00
Generators		Centrifugal pumps (viscous liquid)	2,25 – 2,50
Frequency converters	1,75 – 2,00	Gear and vane pumps	1,50 – 1,75
Generators	1,50 – 2,00	Piston pumps, plunger pumps and press pumps	2,00 – 2,50
Rubber & nylon industry		**Agitators**	
Rubber calenders and rolling mills	1,25 – 2,00	Light liquid	1,25 – 1,50
Mixers	1,25 – 2,00	Viscous liquid	1,50 – 1,75
Extruders	1,25 – 2,00	Liquid with constant density	1,25 – 1,50
Lifters/cranes		Liquid with variable density	1,50 – 2,00
Bridge cranes for steel industry	2,00 – 2,25	**Textile industry**	
Cranes (heavy load operation)	2,00 – 2,25	Winders	1,25 – 1,75
Running gears	1,75 – 2,25	Printing and dyeing machines	1,25 – 1,75
Lifting gears	1,75 – 2,25	Shredders	1,50 – 2,00
Woodworking machinery		**Fans, ventilators and blowers**	
Planing machines	1,50 – 1,75	Light-weight fans	1,25 – 1,75
Barking machines	1,75 – 2,00	Large blowers	1,75 – 2,50
Saw frames	1,75 – 2,00	Centrifugal fans	1,25 –1,50
Compressors		Industrial fans	1,25 –1,50
Centrifugal compressors	1,50 – 2,00	Rotary blowers	1,25 –1,75
Rotary compressors	1,50 – 2,00	Fans (axial / radial)	1,25 –1,75
Turbo compressors	2,00 – 2,50	Fans for cooling towers	1,50 – 2,00
Piston compressors	2,50 – 3,00	**Wastewater treatment plants**	
Metal industry		Rakes	1,25 – 1,50
Wire pulls	1,25 – 1,50	Worm pumps	1,25 – 1,50
Winders	1,25 – 1,50	Concentrators	1,25 – 1,50
Winding drums	1,50 – 2,00	Mixers	1,25 – 1,75
Wire drawing machines	2,00 – 2,50	Aerators	1,75 – 2,00
Plate shears	2,00 – 2,50	**Machine tools**	
Block pushers	2,00 – 2,50	Scissors	1,50 – 2,00
Blooming and slabbing	2,00 – 2,50	Dressing rollers	1,50 – 2,00
De-scalers	2,00 – 2,50	Bending machines	1,50 – 2,00
Hot-rolling mill	2,00 – 2,50	Hole punching machines	1,75 – 2,50
Cold rolling mills	2,00 – 2,50	Levelling machines	1,75 – 2,50
Billet shears	2,00 – 2,50	Hammers	1,75 – 2,50
Plugging machines	2,00 – 2,50	Presses	1,75 – 2,50
Continuous casting machines	2,00 – 2,50	Forging presses	1,75 – 2,50
Shifting devices	2,00 – 2,50	**Other**	
Application	2,00 – 2,50	Equipment for transport of persons	2,00 – 2,50
Roller tables (heavy-weight)	2,00 – 2,50	Rock crushers	2,50 – 3,00
Mixers		Rolling mill drives	2,00 – 2,50
Constant density	1,75 – 2,25		
Variable density	2,00 – 2,50		

COUPLING SELECTION BASED ON OPERATING FACTORS

Coupling selection

The coupling selection is based on operating factors. The coupling has to be dimensioned in a way that the permissible coupling load is not exceeded with any operating condition. For this purpose the actual loads have to be compared to the permissible parameters of the coupling. The shaft-hub-connection has to be investigated by the customer.

1. Drives without periodical torsional vibrations

For example centrifugal pumps, fans, screw compressors etc. The coupling selection requires that the rated torque T_{KN} and maximum torque $T_{K\ max.}$ are reviewed.

1.1 Loading generated by rated torque

Considering the operating factor, the ambient temperature and the torsional direction, the permissible rated torque T_{KN} of the coupling must at least equal the rated torque of the machine T_N.

$$T_N\ [Nm] = 9550 \bullet \frac{P\ [kW]}{n\ [rpm]}$$

$$T_{KN} \geq T_N \bullet S_B \bullet S_t \bullet S_R$$

1.2 Loading generated by torque shocks

Taking into account all relevant factors, the permissible maximum torque of the coupling $T_{K\ max.}$ must at least equal the sum of the peak torque T_S and rated torque of the machine T_N. This applies if the rated torque of the machine T_N is superimposed by a shock process. For drives with A. C. motor and big masses on the load side we recommend to do a calculation of the peak driving torque by our simulation program.

$$T_{K\ max.} \geq (T_N + T_S) \bullet S_Z \bullet S_t \bullet S_R$$

2. Drives with periodical torsional vibrations

For drives subject to torsional vibrations, e. g. diesel engines, piston compressors, piston pumps, generators etc. it is necessary to perform a torsional vibration calculation for a selection ensuring a safe operation. If requested, we will do the torsional vibration calculation and the coupling selection in our company. For the necessary details refer to KTR standard 20004.

COUPLING SELECTION BASED ON OPERATING FACTORS

Example of calculation

Requested: Double-cardanic steel lamina coupling for bridging a shaft distance dimension → RADEX®-N

Application: Connection of IEC standard motor and radial pump

▪ Coupling selection following page 16, item 1: Drives without periodical torsional vibrations

Given: Details of driving side

Rotary current motor:	Size 315 L	
Motor output:	P = 200 kW	
Speed:	n = 1500 rpm	
Starting frequency:	6 times per hour	→ S_Z =1.0 (see page 15)
Ambient temperature:	+ 65 °C	→ S_t =1.0 (see page 15)
Peak torque (starting torque) T_{AS}	= 2 • T_{AN}	
Diameter of motor shaft	80 mm	

Given: Details of load side

Radial pump		→ S_B =1.5 (see page 15)
Rated torque of load side:	T_{LN} = 930 Nm	
Diameter of pump shaft	75 mm	
Distance dimension of motor shaft - pump shaft (DBSE)	= 250 mm	
Direction of torque	same	→ S_R =1,0 (see page 15)

Calculation

1.1 Loading by rated torque

● Rated torque of drive T_{AN}

$$T_{AN} = 9550 \bullet \frac{P\,[kW]}{n\,[rpm]} \rightarrow 9550 \bullet \frac{200\ kW}{1500\ rpm} = \underline{1273\ Nm}$$

● Load produced by rated torque

$$T_{KN} \geq T_{AN} \bullet S_B \bullet S_t \bullet S_R \rightarrow 1273\ Nm \bullet 1{,}5 \bullet 1 \bullet 1 = 1348{,}5\ Nm \rightarrow T_{KN} \geq \underline{1909{,}5\ Nm}$$

1.2 Loading by torque shocks

● Shock on driving side without load torque being overlapping

$$T_{K\,max.} \geq (T_N + T_S) \bullet S_Z \bullet S_t \bullet S_R \rightarrow T_N = 0$$

$$\text{Starting torque } T_{AS} = 2 \bullet T_{AN} \rightarrow 2 \bullet 930\ Nm = \underline{1860\ Nm}$$

→ $T_{K\,max.} \geq 1860\ Nm \bullet 1 \bullet 1 \bullet 1 = \underline{1860\ Nm}$

● Coupling selection

T_{KN} = 2400 Nm

$T_{K\,max.}$ = 4800 Nm

Result

The coupling is sufficiently dimensioned.

Please note:

The shaft-hub-connection has to be verified by the customer separately.

COUPLING SELECTION ACC. TO DIN 740 PART II WITH SPECIFIC FACTORS

Coupling types

Backlash-free servo couplings

ROTEX® GS



Backlash-free, flexible jaw coupling (see page 116)

– Backlash-free and flexible
– Maintenance-free
– Fail-safe
– Compact dimensions, high power density
– Single-cardanic or double-cardanic
– Axial plug-in
– High speeds

TOOLFLEX®



Backlash-free, torsionally rigid metal bellow-type coupling (see page 116)

– Backlash-free and torsionally rigid
– Maintenance-free
– Shear type
– Compact dimensions
– Double-cardanic
– Axial plug-in (as an option)
– All-steel

RADEX®-NC



Backlash-free, torsionally rigid servo lamina coupling (see page 116)

– Backlash-free and torsionally rigid
– Maintenance-free
– Compact dimensions
– Single-cardanic or double-cardanic
– All-steel

COUNTEX®



Backlash-free, torsionally rigid shaft encoder coupling (see page 116)

– Backlash-free and torsionally rigid
– Maintenance-free
– Compact dimensions
– Double-cardanic
– Axial plug-in

Terminology of coupling selection

Description	Symbol	Definition or explanation
Rated torque of coupling [Nm]	T_{KN}	Torque which can be transmitted continuously over the entire permissible speed range, taking into account the factors.
Maximum torque of coupling [Nm]	$T_{K\ max.}$	Torque which can be transmitted over the entire service life of the coupling as dynamic load ≥ 10^5 or as alternating load $5 \cdot 10^4$ taking into account the factors.
Rated torque of machine [Nm]	T_N	Stationary rated torque on the coupling
Rated torque of driving side [Nm]	T_{AN}	Constantly occuring driving torque as per the data indicated by the motor manufacturer
Peak torque [Nm]	T_S	Peak torque on the coupling
Peak torque of driving side [Nm]	T_{AS}	Peak torque with torque shock on driving side, e. g. starting torque of the servo motor as per the data indicated by the motor manufacturer.
Peak torque of load side [Nm]	T_{LS}	Peak torque with torque shock on load side, e. g. braking
Screw tightening torque [Nm]	T_A	Screw tightening torque
Friction torque [Nm]	T_R	Torque that can be transmitted through the frictionally engaged shaft-hub-connection

Description	Symbol	Definition or explanation
Rotational inertia coefficient of driving side	M_A	Factor considering the mass distribution with shocks and vibrations generated on the driving or load side.
Rotational inertia coefficient of load side	M_L	
Mass moment of inertia of driving side[kgm²]	J_A	Total of moments of inertia existing on the driving or load side referring to the coupling speed.
Mass moment of inertia of load side [kgm²]	J_L	
Mass moment of inertia of coupling [kgm²]	J_{KA}	Mass mom. of inertia of coupling half on the drive side
	J_{KL}	Mass mom. of inertia of coupling half on the load side
Mass moment of inertia [kgm²]	$J_{Mot}/J_{Sp}/J_{HS}$	Mass moment of inertia of the motor/mass moment of inertia of the spindle/mass moment of inertia of the main spindle
Temperature factor	S_t	Temperature factor - Factor considering the lower loading capacity or larger deformation of an elastomer part under load particularly with increased temperatures.
Operating factor	S_B	Factor considering the different demands on the coupling dependent on the application.

COUPLING SELECTION ACC. TO DIN 740 PART II WITH SPECIFIC FACTORS

Factors

Temperature factor S_t														
	-50 °C	-40 °C	-30 °C	-20 °C/ +30 °C	≤ +40 °C	≤ +50 °C	≤ +60 °C	≤ +70 °C	≤ +80 °C	≤ +90 °C	≤ +100 °C	≤ +110 °C	≤ +120 °C	≤ +200 °C
ROTEX® GS														
Polyurethane 80 Sh-A-GS	1,0	1,0	1,0	1,0	1,2	1,3	1,4	1,55	1,8	–	–	–	–	–
Polyurethane 92 Sh-A-GS	–	1,0	1,0	1,0	1,2	1,3	1,4	1,55	1,8	2,2	–	–	–	–
Polyurethane 98 Sh-A-GS	–	–	1,0	1,0	1,2	1,3	1,4	1,55	1,8	2,2	–	–	–	–
Polyurethane 64 Sh-D-GS	–	–	–	1,0	1,2	1,3	1,4	1,55	1,8	2,2	3,0	3,0	–	–
Polyurethane 72 Sh-D-GS	–	–	–	1,0	1,2	1,3	1,4	1,55	1,8	2,2	3,0	3,0	–	–
Hytrel 64 Sh-D-H-GS	1,0	1,0	1,0	1,0	1,2	1,3	1,4	1,5	1,6	1,8	2,0	2,3	2,8	–
Hytrel 72 Sh-D-H-GS	1,0	1,0	1,0	1,0	1,2	1,3	1,4	1,5	1,6	1,8	2,0	2,3	2,8	–
TOOLFLEX®														
Size 5 to 12	–	–	1,0	1,0	1,0	1,0	1,0	1,0	1,0	1,0	1,0	–	–	–
Size 16 to 65	–	–	1,0	1,0	1,0	1,0	1,0	1,0	1,0	1,0	1,0	1,0	1,0	1,1
RADEX-NC®														
EK and DK	–	–	1,0	1,0	1,0	1,0	1,0	1,0	1,0	1,0	1,0	1,0	1,0	1,1

Operating factor S_B		
ROTEX® GS*		
Backlash-free drives		
Main spindle drive of machine tools		2,0 – 5,0
Gentle shocks	Grinders, small milling machines / drills	1,6 – 2,4
Average shocks	Milling machines / drills with interrupted cut	2,4 – 3,0
Heavy shocks	Fly cutters etc.	3,0 – 5,0
Positioning drives		
Ball screw drive/toothed belt drive		2,5 – 4,0
Gearboxes	i 3 – ≤ 5	8,0
	i >5 – ≤ 7	5,0
	i >7	3,0
Servohydraulic drives		
With pulsating load [1]		1,2 – 1,3
With alternating load [2]		1,3 – 1,5
TOOLFLEX®, RADEX®-NC		
Uniform motion		1,5
Nonuniform motion		2,0
Shocking motion		2,5 – 4,0
For drives on machine tools (servo motors) values from 1.5 - 2 must be used.		

Start-up factor S_Z	
Starting frequency per minute	
< 20	1,0
< 60	1,2
< 120	1,4
< 180	1,6
< 240	1,8
> 240	2,0

* When using the spider64 Sh-D-GS or 72 Sh-D-GS a minimum factor of 4 or steel hubs have to be used.
[1] With pulsating load the use of aluminium is permissible.
[2] With alternating load please make use of steel hubs.

Shaft encoder drives: Subject to the low torques to be transmitted the coupling size for shaft encoder drives is selected according to the shaft diameters to be connected.

Coupling selection

The coupling selection of the backlash-free servo couplings is based on DIN 740 part 2, but with specific factors. The coupling has to be dimensioned in a way that the permissible coupling load is not exceeded during any operating condition. For this purpose the actual loads have to be compared to the permissible parameters of the coupling. The shaft-hub-connection has to be investigated by the customer. The size of the coupling must be selected so that the following conditions are met.

1. Backlash-free drives

$T_{KN} \geq T_N \bullet S_t \bullet S_B$ and $T_{KN} \geq T_S \bullet S_t \bullet S_B$

In case of load torque: $T_{KN} \geq T_S \bullet S_t \bullet S_B + T_N \bullet S_t$

Considering the ambient temperature and the operating factor, the permissible rated torque T_{KN} of the coupling must at least equal the rated torque of the machine T_N.
Considering the ambient temperature and the operating factor, the permissible rated torque T_{KN} of the coupling must at least equal the peak torque arising.
The following applies for the peak torque T_S:

Shock on driving side $T_S = T_{AS} \bullet M_A \bullet S_Z$ → $M_A = \frac{J_L}{(J_A + J_L)}$

2. Servohydraulic drives

$T_{KN} \geq T_{AS} \bullet S_t \bullet S_B$

Taking into account the ambient temperature and the operating factor, the permissible rated torque T_{KN} of the coupling has to correspond at least to the peak torque of the driving side T_{AS}.

$S_t \bullet S_B$ with use of aluminium at least 1,5.

Please note:
For general applications (not backlash-free applications) please follow coupling selection according to DIN 740 part 2 (page 10 et seqq.)

COUPLING SELECTION ACC. TO DIN 740 PART II WITH SPECIFIC FACTORS

Example of calculation for positioning drives

Requested: Backlash-free coupling damping vibrations → ROTEX® GS

Application: Connecting servo motor and ball screw drive for backlash-free positioning

→ Coupling selection following page 19, item 1: Backlash-free drives

Given: Details of driving side

Servo motor

Rated torque T_{AN}:	43 Nm	
Max. driving torque T_{AS}:	144 Nm	
Moment of inertia J_{Mot}:	0,0108 kgm²	
Diameter of motor shaft	32 k6 without feather keyway	
Ambient temperature:	40 °C	→ S_t = 1,2 **(see page 19)**
Starts per minute	15	→ S_Z = 1,0 **(see page 19)**

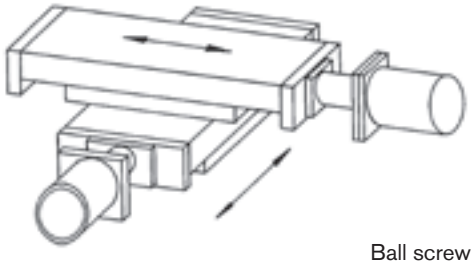

Ball screw

Given: Details of machine on driving side

Ball spindle J_{SP}:	0,0038 kgm²	
Spindle pitch s:	10 mm	
Diameter of spindle shaft:	30 k6 without feather keyway	
Mass of slide + work piece m_{Sl}:	1030 kg	
No load torque available		
Required:	High torsional stiffness	→ S_B = 4 **(s. Seite 19)**

Calculation

1. Backlash-free drives

- Loading by rated torque (pre-selection)

$T_{KN} \geq T_{AN} \bullet S_t \bullet S_B$ → 43 Nm • 1,2 • 4 → $T_{KN} \geq$ 206,4 Nm

- Coupling selection (pre-selection)

ROTEX® GS 38

Spider 98 Shore-A with clamping ring hubs 6.0 light:

T_{KN} = 325 Nm

$T_{K\ max.}$ = 650 Nm

Mass moments of inertia (see page **130**)

J_{KA} = 0,000517 kgm²

J_{KL} = 0,000517 kgm²

- Load by maximum driving torque, not including load torque

$T_{KN} \geq T_S \bullet S_t \bullet S_B$

Shock on driving side $T_S = T_{AS} \bullet M_A \bullet S_Z$ → = 144 Nm • 0,379 • 1,0 → T_S = 54,58 Nm

$M_A = \frac{J_L}{(J_A + J_L)}$ → $= \frac{0{,}006917\ kgm^2}{(0{,}011317\ kgm^2 + 0{,}006917\ kgm^2)}$ → M_A = 0,379

$J_A = J_{Mot} + J_{KL}$ → 0,0108 kgm² + 0,000517 kgm² → J_A = 0,011317 kgm²

$J_L = J_{Sp} + J_{Sl} + J_{KL}$ → 0,0038 kgm² + 0,0026 kgm² + 0,000517 kgm² → J_L = 0,006917 kgm²

$J_{Sl} = m_{Sl} \bullet \left(\frac{s}{2 \bullet \pi}\right)^2$ → 1030 kg • $\left(\frac{0{,}01}{2 \bullet \pi}\right)^2$ → J_{Sl} = 0,0026 kgm²

→ $T_{KN} \geq$ 54,58 Nm • 1,2 • 4 → $T_{KN} \geq$ 261,9 Nm

T_{KN} with 325 Nm ≥ 261,9 Nm

- Review of shaft-hub-connection: Friction torque for clamping ring hubs type 6.0 light

The coupling has to be dimensioned such that the permissible friction torque is not exceeded during any operating condition.

$T_R \geq T_{AS}$ values T_R see page 130

Friction torque of ROTEX® GS 38 clamping ring hub 6.0 light Ø30 H7/k6 T_R = 563 Nm > 144 Nm

Result

The coupling is sufficiently dimensioned.

COUPLING SELECTION ACC. TO DIN 740 PART II WITH SPECIFIC FACTORS

Example of calculation for main spindle drives

Requested: Backlash-free, axial plug-in coupling for high speeds → ROTEX® GS

Application: Connecting servo motor and and main spindle in a grinding machine

→ Coupling selection following page 19, item 1: Backlash-free drives

Given: Details of driving side

Servo motor

Rated torque with operation T_{AN}:	130 Nm	
Max. driving torque T_{AS}:	190 Nm	
Max. speed:	6000 rpm	
Moment of inertia J_{Mot}:	0,316 kgm²	
Diameter of motor shaft	30 k6 without feather keyway	
Ambient temperature:	60 °C	→ S_t = 1,4 **(see page 19)**
Start-up factor S_Z:	<20 1/min	→ S_Z = 1,0 **(see page 19)**

Given: Details of machine on driving side

Moment of inertia of load side J_{HS}	0,1094 kgm²	
Diameter of main spindle shaft:	30 k6 without feather keyway	
No load torque available		
Required:	average shocks	→ S_B = 2 **(see page 19)**

Calculation

1. Backlash-free drives

- Belastung durch das Nenndrehmoment (Bearbeitungsmoment)

$T_{KN} \geq T_{AN} \bullet S_t \bullet S_B$ → 130 Nm • 1,4 • 2,4 → $T_{KN} \geq$ 436,8 Nm

- Kupplungsauswahl

ROTEX® GS 42

Spider 98 Shore-A with clamping ring hubs 6.0 light:

T_{KN} = 450 Nm

$T_{K\,max.}$ = 900 Nm

Mass moments of inertia of page 130

J_{KA} = 0,001117 kgm²

J_{KL} = 0,001117 kgm²

- Load by maximum driving torque, not including load torque (Beschleunigung der Spindel)

$T_{KN} \geq T_S \bullet S_t \bullet S_B$

Shock on driving side $T_S = T_{AS} \bullet M_A \bullet S_Z$ → = 190 Nm • 0,258 • 1,0 → T_S= 49,02 Nm

$M_A = \frac{J_L}{(J_A + J_L)}$ → = $\frac{0{,}110517\ kgm^2}{(0{,}317117\ kgm^2 + 0{,}110517\ kgm^2)}$ → M_A = 0,258

$J_A = J_{HSt} + J_{KL}$ → 0,1094 kgm² + 0,001117 kgm² → J_L= 0,110517 kgm²

$J_L = J_{Mot} + J_{KL}$ → 0,316 kgm² + 0,001117 kgm² → J_A= 0,317117 kgm²

$T_{KN} \geq$ 49,02 Nm • 1,4 • 2,4 → $T_{KN} \geq$ 164,7 Nm

T_{KN} with 450 Nm ≥ 164.7 Nm

- Review of shaft-hub-connection: Friction torque for clamping ring hubs type 6.0 light

The coupling has to be dimensioned such that the permissible friction torque is not exceeded during any operating condition.

$T_R \geq T_{AS}$ values T_R see page 130

Friction torque of ROTEX® GS 42 clamping ring hub 6.0 light Ø30 H7/k6 T_R = 645 Nm > 190 Nm

Result

The coupling is sufficiently dimensioned.

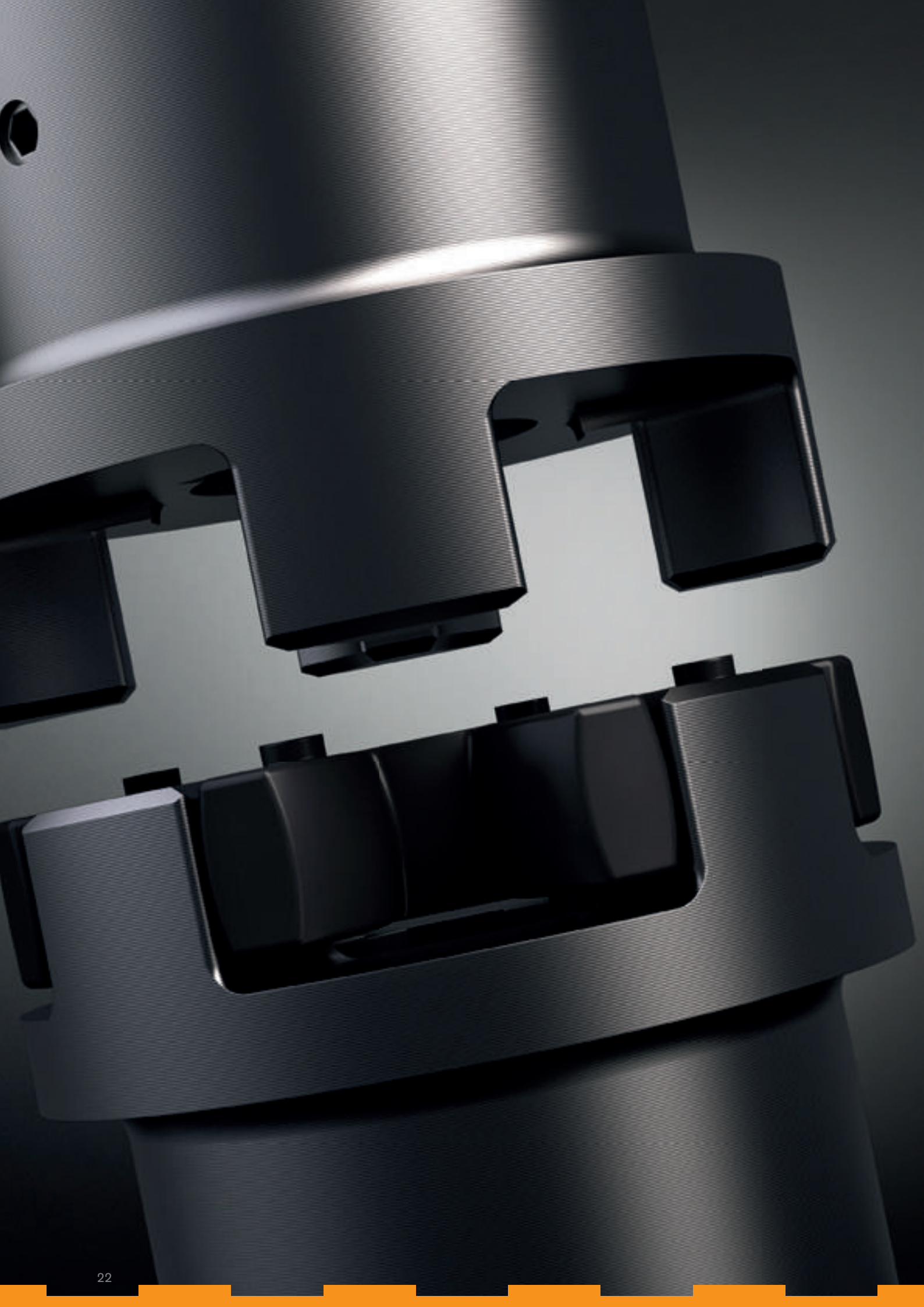

Flexible jaw and pin & bush couplings

Types and operating description 24

ROTEX®
Hub types 26
Displacements 27
Standard spiders 28
Special spiders 30
Selection of standard IEC motors 31
Cylindrical bores and spline bores 32
Inch bores and taper bores 33
Standard type, material cast and powder metal 34
Standard type, material steel / UL / marine 36
Standard type, material aluminium 38
Standard type, material steel with CDP coating and material stainless steel 39
Type with taper clamping bush 40
Type with clamping ring hubs 41
Type with clamping hubs 42
Type with flange programme 43
Type A-H drop-out center design coupling 44
Type S-H drop-out center design coupling with SPLIT hubs 45
Type SP single-cardanic shaft coupling (Non Sparking) 46
Type SP ZS-DKM-C double-cardanic shaft coupling (Non Sparking) 47
Type ZS-DKM-H double-cardanic shaft coupling 48
Type DKM double-cardanic shaft coupling 49
Type CF, CFN, DF, DFN flange programme 50
Type ZR intermediate shaft programme 51
Type BTAN and SBAN with brake druml / with brake disk 52
Type AFN-SB drop-out center design coupling with brake disk 54
Type SD shiftable coupling shiftable at standstill 55
Type FNN for mounting of fan 56
Other types with clamping sets 57
Other types with torque limiters 58
Weights and mass moments of inertia 59

POLY-NORM®
Technical data 61
Selection of standard IEC motors 62
Type AR, two-part 63
Type AR for taper clamping bush 64
Type ADR, three-part 65
Types BTA, SBA with brake drum, brake disk 66
Type ADR-SB with brake disk for stop brake 67
Type AZR, standard drop-out center design coupling 68

POLY
Selection of standard IEC motors 69
Type PKZ, two-part and PKD, three-part 70
Type PKA, drop-out center design coupling 71
Displacements / elastomer sets / screws 72

REVOLEX®
Technical data 73
Type KX-D, material cast 74
Type KX-D, material steel 75
Type KX-D with brake disk 76
Technical data of pins 78
Assembly / other types 79

ROTEX®



POLY-NORM®



POLY



REVOLEX®



FLEXIBLE JAW AND PIN & BUSH COUPLINGS
TYPES AND OPERATING DESCRIPTION

Properties of flexible jaw and pin & bush couplings

				
Product	**ROTEX®**	**POLY-NORM®**	**POLY**	**REVOLEX®**
Type	Torsionally flexible jaw-type coupling			Torsionally flexible pin & bush coupling
Properties				
Torsionally flexible	●	●	●	●
Damping vibrations	●	●	●	●
Maintenance-free	●	●	●	●
Axial plug-in	●	●	●	●
Shear type			●	
Fail-safe	●	●		●
Compensating for misalignment	●	●	●	●
Types				
Variant diversity	very high	average	average	high
Special features	Extensive basic programme available from stock while customized solutions can be realized	Basic programme available from stock	Basic programme available from stock	Extensive programme, ideal for customized solutions, for applications with high performances
Applications/core industries	Manifold applications, applicable in all industries	Pump industry, industrial gearboxes	Chemical pumps, high-pressure pumps,...	Industrial gearboxes, conveyor systems, industrial fans, ropeways, agitators, generators, ...
Surface	Allover machining, very good dynamic properties	Shell surface machined	Shell surface machined	Allover machining, very good dynamic properties
Torque range TKN [Nm]				
Min.	1	40	42	3800
Max.	35.000	67.000	6.100	1.220.000
Max. circumferential speed v [m/s]				
Cast EN-GJL (dynamic balancing)	35	35	35	35
Steel + cast EN-GJS (dynamic balancing)	60			60
Hub materials available				
Steel (semi-finished product) » customized solutions available	●			●
Cast iron (GJL) » subject to mould	●	●	●	●
Nodular iron (GJS) » subject to mould	●	○		○
Aluminium semi-finished product (Al-H) » customized solution available	●			
Aluminium diecast (Al-D)	●			
Stainless steel	●			
Corrosion-protected types	●	○	○	○
Spiders / elastomers				
Material	T-PUR, PA, PEEK, Hytrell, ...	NBR (up to size 180) T-PUR (from size 200)	NBR	NR, NBR NBR electrically insulating
Degree of hardness	flexible to torsionally rigid	flexible	flexible	flexible
Temperature range in °C, min. / max. (standard)	- 50 / + 120	- 30 / + 80	- 30 / + 80	- 30 / + 80
Temperature range in °C, min. / max. (special)	- 50 / + 250	- 30 / + 80	- 30 / + 80	- 50 / + 80

● ≈ Standard
○ ≈ On request

FLEXIBLE JAW AND PIN & BUSH COUPLINGS
TYPES AND OPERATING DESCRIPTION

Product finder of jaw and pin & bush couplings

				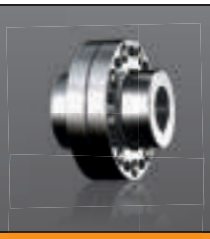
Product	**ROTEX®**	**POLY-NORM®**	**POLY**	**REVOLEX®**
Type	Torsionally flexible jaw-type coupling			Torsionally flexible pin & bush coupling
Geometries				
Design	compact	short	short	short
Mass moment of inertia	low	average	high	average
Shaft distance dimension	low / average	low	low	low
Types (extract)				
Elastomers can be disassembled radially » with no need of displacing driving/driven side	AFN, A-H, S-H, ZR, DF, DNF, CF-H	ADR, ADR-SB	PKD	standard
Intermediate shaft types » bridging larger shaft distances	ZR, ZWN	–	–	customized
Standard spacers 100 mm to 250 mm	ZS-DKM-H	AZR	PKA	customized
Shaft-to-shaft connection	standard	standard	standard	standard
Flange-to-shaft connection	CF, CFN	–	–	customized
Flange-to-flange connection » particularly short mounting lengths	DF, DNF	–	–	customized
Double-cardanic » compensating for big displacements » lower restoring forces	ZS-DKM-H, ZR, ZWN	–	–	–
Certifications/type examinations				
ATEX	●	●	●	●
UL-listed	●			
GOST R/ GOST TR	●	●	●	●
DNV/GL	●			●
ABS	●			O
Bureau Veritas	●			O
LR	O			O
RS CLASS	O			O
CCS	O			O
NEW ClassNK	O			

● ≈ Standard
O ≈ On request

Hub types

Due to the numerous applications of ROTEX® for many different applications and mounting situations, this coupling system is available with various hub types. These types mainly differ in that they offer either positive or frictionally engaged connections, but mounting situations like, for example, gear shafts with integrated transmission cams or similar applications are covered, too.

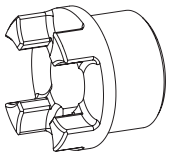

Type 1.0 hub
with feather keyway and setscrew

Positive locking power transmission, permissible torque depending on the permissible surface pressure. Not suitable for backlash-free power transmission with heavily reversing operation.

Type 1.1 hub
without feather keyway with setscrew

Non-positive torque transmission for crimp and glued connections. (No ATEX release)

Type 1.3 hub
with spline bore (see page 32)

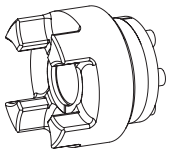

Type 4.2 hub
with CLAMPEX® clamping set KTR 250

Frictionally engaged, backlash-free shaft-hub-connection for the transmission of average torques.

Type 4.1 for CLAMPEX® clamping set KTR 200
type 4.3 for CLAMPEX® clamping set KTR 400

Frictionally engaged, backlash-free shaft-hub-connection for the transmission of high torques.

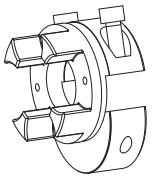

Type 7.5 clamping hub type DH
without feather keyway for
double-cardanic connection

Frictionally engaged, backlash-free shaft-hub-connection for radial assembly of coupling. Transmittable torques depending on bore diameter (For ATEX category 3 only)

Type 7.6 clamping hub type DH
with feather keyway for double-cardanic connection

Positive locking power transmission with additional friction fit for radial assembly of coupling. The frictional engagement avoids or reduces the reverse backlash. Surface pressure of the keyway connection is reduced.

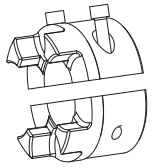

Type 7.0 SPLIT hub
without feather keyway

Split hub made of cast iron. Frictionally engaged, backlash-free shaft-hub-connection-. Transmittable torques depending on bore diameter (For ATEX category 3 only)

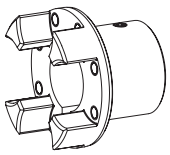

FNN hub

Coupling hub to be connected to an attachment such as brake drum, brake disk and fan.

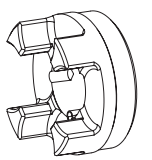

TB1 hub/TB2 hub

Coupling hub for taper clamping bushes. TB1 screwed on cam side. TB2 screwed externally.

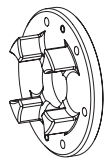

Driving flange design 3b

Driving flange to connect to customer's component. For dimensions see page 50

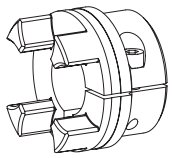

Type 2.0 clamping hub
single slotted without feather keyway

Frictionally engaged, backlash-free shaft-hub-connection. Transmittable torques depending on bore diameter (see page 42). (For ATEX category 3 only)

Type 2.1 clamping hub
single slotted with feather keyway

Positive locking power transmission with additional frictionally engaged condition. The frictional engagement avoids or reduces the reverse backlash. Surface pressure of the keyway connection is reduced.

Type 2.3 clamping hub
with spline bore (see page 42)

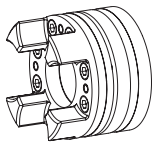

Type 6.0 clamping ring hub
(see ROTEX® GS series)

Integrated frictionally engaged shaft-hub-connection for the transmission of higher torques. Screwing on elastomer side. For details about torque and dimensions see page 41. Suitable for high speeds.

Type 6.5 clamping ring hub
(see ROTEX® GS series)

Design like 6.0, except for clamping screws externally. As an example for radial disassembly of intermediate pipe (special design).

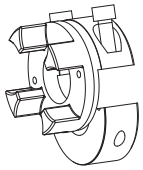

Type 7.8 clamping hub type H
without feather keyway

Frictionally engaged, backlash-free shaft-hub-connection for radial assembly of coupling. Transmittable torques depending on bore diameter (For ATEX category 3 only)

Type 7.9 clamping hub type H
with feather keyway

Positive locking power transmission with additional friction fit for radial assembly of coupling. The frictional engagement avoids or reduces the reverse backlash. Surface pressure of the keyway connection is reduced.

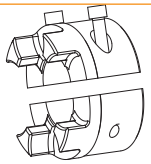

Type 7.1 SPLIT hub
with feather keyway

Split hub made of cast iron. Positive locking power transmission with additional frictionally engaged condition. The frictional engagement avoids or reduces the reverse backlash. Surface pressure of the keyway connection is reduced.

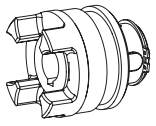

SD hub shifting hub

Coupling hub for separating or switching on the driving/ driven machine with standstill of the machine. Can be combined with slip ring and shiftable linkage.

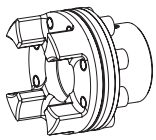

Type 3Na + 4N
Driving flange with flange type K

For type AFN and BFN:
With type AFN the spider can be replaced while being assembled without having to disassemble the driving and driven side.

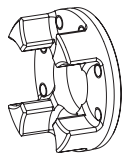

Driving flange design 3Na

Driving flange to connect to customer's component. For dimensions see page 50

Displacements

Axial displacement ΔKa

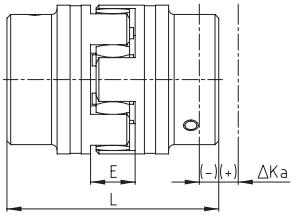

$L_{max.} = L + \Delta Ka$

Radial displacement ΔKr

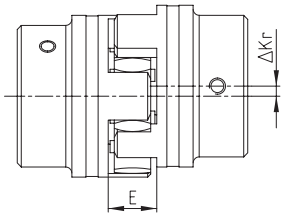

Angular displacement ΔKw [degrees]

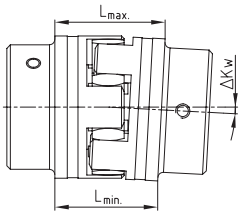

$\Delta Kw\ [mm] = L_{max} - L_{min}$

Displacements for spider 92 and 98 Shore-A																	
ROTEX® Size	14	19	24	28	38	42	48	55	65	75	90	100	110	125	140	160	180
Max. axial displacement ΔKa [mm]	-0,5 +1,0	-0,5 +1,2	-0,5 +1,4	-0,7 +1,5	-0,7 +1,8	-1,0 +2,0	-1,0 +2,1	-1,0 +2,2	-1,0 +2,6	-1,5 +3,0	-1,5 3,4	-1,5 +3,8	-2,0 +4,2	-2,0 +4,6	-2,0 +5,0	-2,5 +5,7	-3,0 +6,4
Max. radial displacement with n= 1500 RPM ΔKr [mm]	0,17	0,20	0,22	0,25	0,28	0,32	0,36	0,38	0,42	0,48	0,50	0,52	0,55	0,60	0,62	0,64	0,68
Max. angular displacement with n= 1500 RPM ΔKw [degrees]	1,2	1,2	0,9	0,9	1,0	1,0	1,1	1,1	1,2	1,2	1,2	1,2	1,3	1,3	1,2	1,2	1,2
ΔKw [mm]	0,67	0,82	0,85	1,05	1,35	1,70	2,00	2,30	2,70	3,30	4,30	4,80	5,60	6,50	6,60	7,60	9,00

Displacements for spider 64 Shore-D																	
ROTEX® size	14	19	24	28	38	42	48	55	65	75	90	100	110	125	140	160	180
Max. axial displacement ΔKa [mm]	-0,5 +1,0	-0,5 +1,2	-0,5 +1,4	-0,7 +1,5	-0,7 +1,8	-1,0 +2,0	-1,0 +2,1	-1,0 +2,2	-1,0 +2,6	-1,5 +3,0	-1,5 +3,4	-1,5 +3,8	-2,0 +4,2	-2,0 +4,6	-2,0 +5,0	-2,5 +5,7	-3,0 +6,4
Max. radial displacement with n= 1500 RPM ΔKr [mm]	0,11	0,13	0,15	0,18	0,21	0,23	0,25	0,27	0,30	0,34	0,36	0,37	0,40	0,43	0,45	0,46	0,49
Max. angular displacement with n= 1500 RPM ΔKw [degrees]	1,1	1,1	0,8	0,8	0,9	0,9	1,0	1,0	1,1	1,1	1,1	1,1	1,2	1,2	1,1	1,1	1,1
ΔKw [mm]	0,57	0,76	0,76	0,90	1,25	1,40	1,80	2,00	2,50	3,00	3,80	4,30	5,30	6,00	6,10	7,10	8,00

Displacements for spider PA, PEEK															
ROTEX® size	14	19	24	28	38	42	48	55	65	75	90	100	110	125	140
Max. axial displacement ΔKa [mm]	-0,5 +1,0	-0,5 +1,2	-0,5 +1,4	-0,7 +1,5	-0,7 +1,8	-1,0 +2,0	-1,0 +2,1	-1,0 +2,2	-1,0 +2,6	-1,5 +3,0	-1,5 +3,4	-1,5 +3,8	-2,0 +4,2	-2,0 +4,6	-2,0 +5,0
Max. radial displacement with n= 1500 RPM ΔKr [mm]	0,08	0,10	0,11	0,12	0,14	0,16	0,18	0,19	0,21	0,24	0,25	0,26	0,27	0,30	0,31
Max. angular displacement with n= 1500 RPM ΔKw [degrees]	0,60	0,45	0,45	0,50	0,50	0,55	0,55	0,55	0,60	0,60	0,60	0,60	0,65	0,65	0,60
ΔKw [mm]	0,33	0,41	0,42	0,52	0,67	0,85	1,00	1,15	1,35	1,65	2,15	2,40	2,80	3,25	3,30

The above-mentioned figures of displacement of flexible ROTEX® couplings are standard values taking into account the load of the coupling up to the rated torque TKN and an operating speed n = 1500 rpm along with an ambient temperature of + 30° C.
The displacement figures may only be used one by one - if they appear simultaneously, they must be limited in proportion. Care should be taken to maintain the distance dimension E accurately in order to allow for axial clearance of the coupling while in operation. Detailed mounting instructions are shown on our homepage (www.ktr.com).

Properties of standard spiders

ROTEX® 14	ROTEX® 19	ROTEX® 24 - 65	ROTEX® 75 - 160	ROTEX® 180
	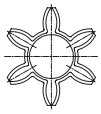	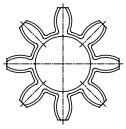	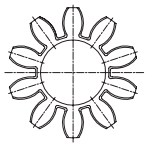	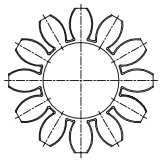

Spider type (hardness Shore)	92 Shore-A (T-PUR®)	92 Shore-A
	 T-PUR®	
Size	14 to 180	14 to 90
Material	T-PUR®	Polyurethane (PUR)
Permissible temperature range Permanent temperature Short-term temperature	 -50 °C to +120 °C -50 °C to +150 °C	 -40 °C to +90 °C -50 °C to +120 °C
Properties	– significantly higher service life expectancy – very good temperature resistance – improved damping of vibrations – good damping, average flexibility – suitable for all hub materials	– good damping, average flexibility – suitable for all hub materials

Spider type (Shore hardness)	98 Shore-A (T-PUR®) [1]	98 Shore-A [1]
	 T-PUR®	
Size	14 to 180	14 to 90
Material	T-PUR®	Polyurethane (PUR)
Permissible temperature range Permanent temperature Short-term temperature	 -50 °C to +120 °C -50 °C to +150 °C	 -30 °C to +90 °C -40 °C to +120 °C
Properties	– significantly higher service life expectancy – very good temperature resistance – improved damping of vibrations – transmission of high torques with average damping – recommended hub material: steel, GJL and GJS	– transmission of high torques with average damping – recommended hub material: steel, GJL and GJS

Spider type (Shore hardness)	64 Shore-D (T-PUR®)	64 Shore-D
	 T-PUR®	
Size	14 to 180	14 to 90
Material	T-PUR®	Polyurethane (PUR)
Permissible temperature range Permanent temperature Short-term temperature	 -50 °C to +120 °C -50 °C to +150 °C	 -30 °C to +110 °C -30 °C to +130 °C
Properties	– significantly higher service life expectancy – very good temperature resistance – improved damping of vibrations – transmission of very high torques with low damping – recommended hub material: steel and GJS	– transmission of very high torques with low damping – suitable for displacing critical speeds – suitable with high humidity, resistant to hydrolysis – recommended hub material: steel and GJS

Härtegrad

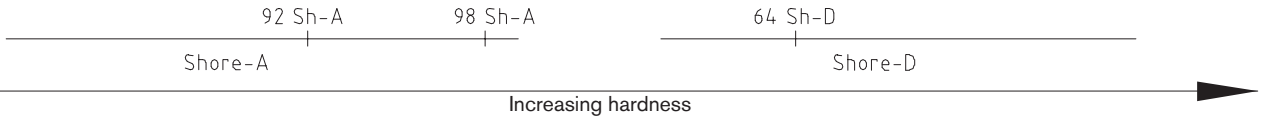

Technical data of standard spiders

92 Shore-A spider made of T-PUR® and PUR

ROTEX® Size	Max. speed V=35 m/s GJL	Max. speed V=40 m/s steel	Twist angle ϕ with TKN	Twist angle ϕ with TK max	Torque [Nm] DIN 740 [1] Rated (T_{KN})	Max ($T_{K\,max}$)	Vibratory (T_{KW})	$T_{Kmax.}$ [2]	Damping power P_{KW} [W] [1]	Relative damping ψ	Resonance factor V_R	Torsion spring stiffness C dyn. [Nm/rad] 1.0 T_{KN}	0.75 T_{KN}	0.5 T_{KN}	0.25 T_{KN}
14	22200	25400	6,4°	10°	7,5	15	2,0	22,5	–			0,38x10³	0,31x10³	0,24x10³	0,14x10³
19	16700	19000			10	20	2,6	30	4,8			1,28x10³	1,05x10³	0,8x10³	0,47x10³
24	12100	13800			35	70	9,1	105	6,6			4,86x10³	3,98x10³	3,01x10³	1,79x10³
28	10100	11500			95	190	25	285	8,4			10,9x10³	8,94x10³	6,76x10³	4,01x10³
38	8300	9500			190	380	49	570	10,2			21,05x10³	17,26x10³	13,05x10³	7,74x10³
42	7000	8000			265	530	69	795	12,0			23,74x10³	19,47x10³	14,72x10³	8,73x10³
48	6350	7250			310	620	81	930	13,8			36,7x10³	30,09x10³	22,75x10³	13,49x10³
55	5550	6350			410	820	107	1230	15,6			50,7x10³	41,59x10³	31,45x10³	18,64x10³
65	4950	5650	3,2°	5°	625	1250	163	1875	18,0	0,80	7,90	97,1x10³	79,65x10³	60,2x10³	35,7x10³
75	4150	4750			1280	2560	333	3840	21,6			113,3x10³	92,9x10³	70,3x10³	41,65x10³
90	3300	3800			2400	4800	624	7200	30,0			190,1x10³	155,9x10³	117,9x10³	69,9x10³
100	2950	3350			3300	6600	858	9900	36,0			253,1x10³	207,5x10³	156,9x10³	93x10³
110	2600	2950			4800	9600	1248	14400	42,0			415,5x10³	336,9x10³	257,6x10³	177,4x10³
125	2300	2600			6650	13300	1729	19950	48,0			647,7x10³	537,3x10³	412,2x10³	277,5x10³
140	2050	2350			8550	17100	2223	25650	54,6			813,4x10³	670,2x10³	519,7x10³	351,7x10³
160	1800	2050			12800	25600	3328	38400	75,0			1298x10³	1104x10³	901,9x10³	655,7x10³
180	1550	1800			18650	37300	4849	55950	78,0			2327x10³	1981x10³	1618x10³	1176x10³

98 Shore-A spider made of T-PUR® and PUR

ROTEX® Size	Max. speed V=35 m/s GJL	Max. speed V=40 m/s steel	Twist angle ϕ with TKN	Twist angle ϕ with TK max	Torque [Nm] DIN 740 [1] Rated (T_{KN})	Max ($T_{K\,max}$)	Vibratory (T_{KW})	$T_{Kmax.}$ [2]	Damping power P_{KW} [W] [1]	Relative damping ψ	Resonance factor V_R	Torsion spring stiffness C dyn. [Nm/rad] 1.0 T_{KN}	0.75 T_{KN}	0.5 T_{KN}	0.25 T_{KN}
14	22200	25400	6,4°	10°	12,5	25	3,3	37,5	–			0,56x10³	0,46x10³	0,35x10³	0,21x10³
19	16700	19000			17	34	4,4	51	4,8			2,92x10³	2,39x10³	1,81x10³	1,07x10³
24	12100	13800			60	120	16	180	6,6			9,93x10³	8,14x10³	6,16x10³	3,65x10³
28	10100	11500			160	320	42	480	8,4			26,77x10³	21,95x10³	16,6x10³	9,84x10³
38	8300	9500			325	650	85	975	10,2			48,57x10³	39,83x10³	30,11x10³	17,85x10³
42	7000	8000			450	900	117	1350	12,0			54,5x10³	44,69x10³	33,79x10³	20,03x10³
48	6350	7250			525	1050	137	1575	13,8			65,3x10³	53,54x10³	40,48x10³	24x10³
55	5550	6350			685	1370	178	2055	15,6			95x10³	77,9x10³	58,88x10³	34,9x10³
65	4950	5650	3,2°	5°	940	1880	244	2820	18,0	0,80	7,90	129,5x10³	106,2x10³	80,3x10³	47,6x10³
75	4150	4750			1920	3840	499	5760	21,6			197,5x10³	162x10³	122,5x10³	72,6x10³
90	3300	3800			3600	7200	936	10800	30,0			312,2x10³	256x10³	193,6x10³	114,7x10³
100	2950	3350			4950	9900	1287	14850	36,0			383,3x10³	314,3x10³	237,6x10³	140,9x10³
110	2600	2950			7200	14400	1872	21600	42,0			805,9x10³	663,1x10³	515,3x10³	360,5x10³
125	2300	2600			10000	20000	2600	30000	48,0			1207x10³	1003x10³	787,6x10³	552,5x10³
140	2050	2350			12800	25600	3328	38400	54,6			1549x10³	1283x10³	979,8x10³	674,1x10³
160	1800	2050			19200	38400	4992	57600	75,0			2481x10³	2137x10³	1781x10³	1275x10³
180	1550	1800			28000	56000	7280	84000	78,0			4220x10³	3635x10³	3031x10³	2170x10³

Spider 64 Shore-D made of T-PUR® and PUR

ROTEX® Size	Max. speed V=35 m/s GJL	Max. speed V=40 m/s steel	Twist angle ϕ with TKN	Twist angle ϕ with TK max	Torque [Nm] DIN 740 [1] Rated (T_{KN})	Max ($T_{K\,max}$)	Vibratory (T_{KW})	$T_{Kmax.}$ [2]	Damping power P_{KW} [W] [1]	Relative damping ψ	Resonance factor V_R	Torsion spring stiffness C dyn. [Nm/rad] 1.0 T_{KN}	0.75 T_{KN}	0.5 T_{KN}	0.25 T_{KN}
14	22200	25400	4,5°	7,0°	16	32	4,2	48	9,0			0,76x10³	0,62x10³	0,47x10³	0,28x10³
19	16700	19000			21	42	5,5	63	7,2			5,35x10³	4,39x10³	3,32x10³	1,97x10³
24	12100	13800			75	150	19,5	225	9,9			15,11x10³	12,39x10³	9,37x10³	5,55x10³
28	10100	11500			200	400	52	600	12,6			27,52x10³	22,57x10³	17,06x10³	10,12x10³
38	8300	9500			405	810	105	1215	15,3			70,15x10³	57,52x10³	43,49x10³	25,78x10³
42	7000	8000			560	1120	146	1680	18,0			79,9x10³	65,5x10³	49,52x10³	29,35x10³
48	6350	7250			655	1310	170	1965	20,7			95,5x10³	78,3x10³	59,22x10³	35,1x10³
55	5550	6350			825	1650	215	2475	23,4			107,9x10³	88,5x10³	66,9x10³	39,66x10³
65	4950	5650	2,5°	3,6°	1175	2350	306	3525	27,0	0,75	8,50	151,1x10³	123,9x10³	93,7x10³	55,53x10³
75	4150	4750			2400	4800	624	7200	32,4			248,2x10³	203,5x10³	153,9x10³	91,2x10³
90	3300	3800			4500	9000	1170	13500	45,0			674,5x10³	553,1x10³	418,2x10³	247,9x10³
100	2950	3350			6185	12370	1608	18555	54,0			861,2x10³	706,2x10³	533,9x10³	316,5x10³
110	2600	2950			9000	18000	2340	27000	63,0			1230x10³	1001x10³	773,1x10³	531,4x10³
125	2300	2600			12500	25000	3250	37500	72,0			1749x10³	1436x10³	1149x10³	832,1x10³
140	2050	2350			16000	32000	4160	48000	81,9			2312x10³	1929x10³	1521x10³	1082x10³
160	1800	2050			24000	48000	6240	72000	112,5			3415x10³	2961x10³	2471x10³	1830x10³
180	1550	1800			35000	70000	9100	105000	117,0			5670x10³	4917x10³	4103x10³	3038x10³

[1] see catalogue page 11
[2] ≤ 1000 Load change
[3] at +30°C

Temperature factor St

	-50 °C	-30 °C +30 °C	+40 °C	+50 °C	+60 °C	+70 °C	+80 °C	+90 °C	+100 °C	+110 °C	+120 °C
T-PUR®	1,0	1,0	1,1	1,2	1,3	1,45	1,6	1,8	2,1	2,5	3,0
PUR	–	1,0	1,2	1,3	1,4	1,55	1,8	2,2	–	–	–

Unless explicitly specified in your order, we will supply spiders with Shore hardness 92 Sh-A T-PUR®.
For circumferential speeds exceeding V = 30 m/s, dyn. balancing is necessary For circumferential speeds exceeding V = 35 m/s only steel or nodular iron.

Technical data and properties of special spiders

		
Spider type	PA	PEEK
Material	Polyamide	Polyetheretherketone
Permissible temperature range Permanent temperature Short-term temperature	-20 °C to +130 °C 1) -30 °C to +150 °C 1)	up to +180 °C (ATEX to +160 °C) up to +250 °C
Properties	– small twisting angle and high torsion spring stiffness – transmission of very high torques with very low damping – good resistance to chemicals 1) – recommended hub material: steel – high restoring forces with displacements	– small twisting angle and high torsion spring stiffness – transmission of very high torques with very low damping – highly temperature-resistant, resistant to hydrolysis – good resistance to chemicals – recommended hub material: steel – high restoring forces with displacements

[1] different properties depending on compound

Torques			
	PA, PEEK		
	TKN [Nm]	TK max [Nm]	TKW [Nm]
14	22	44	5,5
19	30	60	8,0
24	105	210	27,5
28	280	560	73
38	565	1130	147
42	785	1570	204
48	915	1830	238
55	1200	2400	312
65	1645	3290	427
75	2560	5130	667
90	6300	12600	1640
100	8650	17300	2250
110	10500	21000	2730
125	13000	26000	3380

Temperature factor St												
	-50 °C	-30 °C +30 °C	+40 °C	+50 °C	+60 °C	+70 °C	+80 °C	+90 °C	+100 °C	+110 °C	+120 °C	+180 °C
PA	–	1,0	1,15	1,25	1,4	1,6	1,9	2,3	3,0	–	–	–
PEEK	–	1,0	1,0	1,0	1,0	1,0	1,0	1,0	1,0	1,0	1,0	1,0

Installation of spider

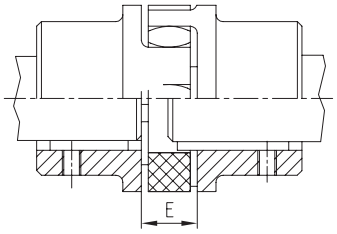

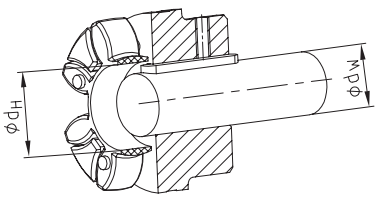

Shaft ØdW with feather key (acc. to DIN 6885 sheet) [1] protuding into the spider ØdH

Mounting dimensions																	
ROTEX® Size	14	19	24	28	38	42	48	55	65	75	90	100	110	125	140	160	180
Distance dimension E	13	16	18	20	24	26	28	30	35	40	45	50	55	60	65	75	85
Dimension dH	10	18	27	30	38	46	51	60	68	80	100	113	127	147	165	190	220
Dimension dW 2)	7	12	20	22	28	36	40	48	55	65	80	95	100	120	135	160	185

[2] If the shaft diameter is smaller than or equal to dimension dH, one shaft end or both shaft ends may protude with the feather keyway in the spider.

Selection of standard IEC motors

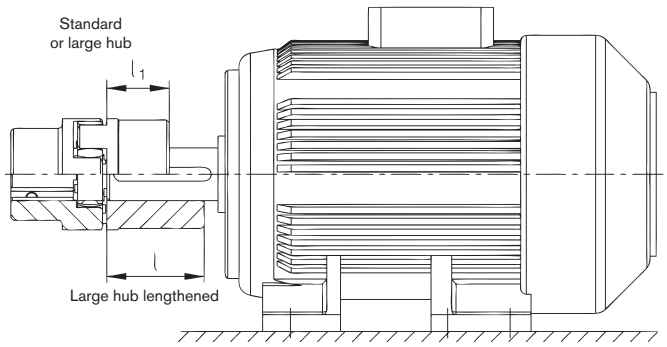

ROTEX® couplings for standard IEC motors, protection class IP 54/IP 55 (spider 92 Shore A)

A. C. motor 50 Hz			Motor output n= 3000 RPM 2 poles		ROTEX® coupling size	Motor output n= 1500 RPM 4 poles		ROTEX® coupling size	Motor output n= 1000 RPM 6 poles		ROTEX® coupling size	Motor output n= 750 RPM 8 poles		ROTEX® coupling size
Size	Shaft end dxl [mm]													
	2-pole	4, 6, 8 pole	Output P [kW]	Torque T [Nm]		Output P [kW]	Torque T [Nm]		Output P [kW]	Torque T [Nm]		Output P [kW]	Torque T [Nm]	
56	9 x 20		0,09	0,32	9 [1]	0,06	0,43	9 [1]	0,037	0,43	9 [1]			
			0,12	0,41		0,09	0,64		0,045	0,52				
63	11 x 23		0,18	0,62		0,12	0,88		0,06	0,7				
			0,25	0,86	14	0,18	1,3	14	0,09	1,1	14			
71	14 x 30		0,37	1,3		0,25	1,8		0,18	2		0,09	1,4	14
			0,55	1,9		0,37	2,5		0,25	2,8		0,12	1,8	
80	19 x 40		0,75	2,5		0,55	3,7		0,37	3,9		0,18	2,5	
			1,1	3,7	19	0,75	5,1	19	0,55	5,8	19	0,25	3,5	19
90S	24 x 50		1,5	5		1,1	7,5		0,75	8		0,37	5,3	
90L			2,2	7,4		1,5	10		1,1	12		0,55	7,9	
100L	28 x 60		3	9,8	24	2,2	15	24	1,5	15	24	0,75	11	24
						3	20					1,1	16	
112M			4	13		4	27		2,2	22		1,5	21	
132S	38 x 80		5,5	18		5,5	36		3	30		2,2	30	
			7,5	25	28			28			28			28
132M						7,5	49		4	40		3	40	
									5,5	55				
160M	42 x 110		11	36		11	72		7,5	75		4	54	
			15	49	38			38			38	5,5	74	38
160L			18,5	60		15	98		11	109		7,5	100	
180M	48 x 110		22	71		18,5	121							
180L						22	144	42	15	148	42	11	145	42
200L	55 x 110		30	97	42	30	196		18,5	181		15	198	
			37	120					22	215				
225S	55 x 110	60 x 140				37	240	48				18,5	244	48
225M			45	145		45	292	55	30	293	55	22	290	55
250M	60 x 140	65 x 140	55	177	48	55	356		37	361	65 [2]	30	392	65
280S		75 x 140	75	241	55	75	484	65 [2]	45	438		37	483	65 [2]
280M			90	289		90	581		55	535		45	587	75
315S		80 x 170	110	353		110	707	75	75	727	75	55	712	
315M	65 x 140		132	423	65	132	849		90	873		75	971	
			160	513		160	1030		110	1070		90	1170	90
315L			200	641		200	1290	90	132	1280	90	110	1420	
		85 x 170			75				160	1550		132	1710	
315			250	802		250	1600		200	1930		160	2070	
			315	1010		315	2020		250	2410	100	200	2580	100
			355	1140		355	2280	100						
355	75 x 140	95 x 170	400	1280	90	400	2570		315	3040	110	250	3220	110
			500	1600		500	3210	110	400	3850	125	315	4060	125
			560	1790		560	3580	125	450	4330		355	4570	
400	80 x 170	110 x 210	630	2020		630	4030		500	4810		400	5150	140
			710	2270	100	710	4540		560	5390	140	450	5790	
			800	2560		800	5120	140	630	6060		500	6420	
450	90 x 170	120 x 210	900	2880	110	900	5760		710	6830	160	560	7190	160
			1000	3200		1000	6400	160	800	7690		630	8090	

The coupling selection is based on an ambient temperature up to 30 °C. For the selection there is a minimum safety factor of 2 of the max. coupling torque (TKmax.). A detailed selection is possible according to catalogue, page 10 et seqq. Drives with periodical torque curves must be selected according to DIN 740 part 2. If requested, KTR will perform the selection. Torque T = rated torque according to Siemens catalogue M 11 · 1994/95..

[1] Dimensions see series ROTEX® GS

[2] Motor hub made of steel see page 36

Cylindrical bores and spline bores

Stock programme of cylindrical finish bores [mm] H7 feather keyway to DIN 6885 sheet 1 [JS9] and thread for setscrews

ROTEX® Size	material	Unbored	Ø6	Ø8	Ø9	Ø10	Ø11	Ø12	Ø14	Ø15	Ø16	Ø17	Ø18	Ø19	Ø20	Ø22	Ø24	Ø25	Ø28	Ø30	Ø32	Ø35	Ø38	Ø40	Ø42	Ø45	Ø48	Ø50	Ø55	Ø60	Ø65	Ø70	Ø75	Ø80	Ø85	Ø90	Ø100
14	Sint	●		●		●	●	●	●																												
	Al-H	●	●	●	●	●	●	●	●	●	●																										
19	Sint	●							●		●			●	●	●	●																				
	AL-D	●		●		●	●	●	●	●	●	●	●	●	●		●																				
	St	●		●		●	●	●	●	●	●	●	●	●	●	●	●	●																			
24	Al-D	●				●	●	●	●	●	●	●	●	●	●	●	●	●	●																		
	St	●				●		●	●	●	●	●	●	●	●	●	●	●	●	●	●																
28	Al-D	●							●		●		●	●	●	●	●	●	●	●	●	●	●														
	St	●							●	●	●		●	●	●	●	●	●	●	●	●	●	●	●													
38	GJL	●									●		●	●	●	●	●	●	●	●	●	●	●	●	●	●										
	St	●													●		●	●	●	●	●	●	●	●	●		●										
42	GJL	●													●	●	●	●	●	●	●	●	●	●	●	●	●	●	●								
	St	●																●	●	●	●	●	●	●	●	●	●	●	●								
48	GJL	●															●	●	●	●	●	●	●	●	●	●	●	●	●	●						
	St	●																		●	●	●	●	●	●	●	●	●	●	●							
55	GJL	●																●		●	●	●	●	●	●	●	●	●	●	●	●					
	St	●																			●	●	●	●		●	●	●	●	●							
65	GJL	●																			●	●	●	●	●	●	●	●	●	●	●						
	St	●																						●			●	●	●	●	●	●	●				
75	GJL	●																				●		●		●	●	●	●	●	●	●	●				
	St	●																										●	●	●	●		●	●	●	●	
90	GJL	●																								●		●	●	●	●	●	●	●	●		
	St	●																												●	●	●	●	●		●	●

Basic programme SAE involute spline

Spline code	Size	Pitch circle	Pitch	No. of teeth	Angle	Spline code	Size	Pitch circle	Pitch	No. of teeth	Angle
PH-S	5/8"	14,28	16/32	9	30°	**PS-S**	1 1/2"	35,98	12/24	17	30°
PI-S	3/4"	17,46	16/32	11	30°	**PD-S**	1 1/2"	36,51	16/32	23	30°
PB-S	7/8"	20,63	16/32	13	30°	**PE-S**	1 3/4"	42,86	16/32	27	30°
PB-BS	1"	23,81	16/32	15	30°	**PK**	1 3/4"	41,275	8/16	13	30°
PJ	1 1/8"	26,98	16/32	17	30°	**PT-C** [1]	2"	47,625	8/16	15	30°
PC-S	1 1/4"	29,63	12/24	14	30°	**PQ-C** [1]	2 1/4"	53,975	8/16	17	30°
PA-S	1 3/8"	33,33	16/32	21	30°						

Basic programme spline bores to DIN 5482

Size	Pitch circle	Pitch	No. of teeth	Profile correction	Size	Pitch circle	Pitch	No. of teeth	Profile correction
A 17 x 14	14,40	1,6	9	+0,600 [2]	**A 35 x 31**	31,50	1,75	18	+0,676
A 20 x 17	19,20	1,6	12	-0,2	**A 40 x 36**	38,00	1,9	20	+0,049
A 25 x 22	22,40	1,6	14	+0,550	**A 45 x 41**	44,00	2	22	+0,181
A 28 x 25	26,25	1,75	15	+0,302	**A 50 x 45**	48,00	2	24	+0,181
A 30 x 27	28,00	1,75	16	+0,327					

Basic programme spline bores to DIN 5480

Spline code	Pitch circle	Pitch	No. of teeth	Spline code	Pitch circle	Pitch	No. of teeth
20 x 1 x 18 x 7H	18,0	1	18	**40 x 2 x 18 x 8H**	36,0	2	18
20 x 1,25 x 14 x 7H	17,5	1,25	14	**45 x 2 x 21 x 7H**	41,0	2	21
25 x 1,25 x 18 x 7H	22,5	1,25	18	**48 x 2 x 22 x 9H**	44,0	2	22
28 x 1,25 x 21 x 7H	26,25	1,25	21	**50 x 2 x 24 x 8H**	48,0	2	24
30 x 2 x 14 x 7H	26,0	2	14	**60 x 2 x 28 x 8H**	56,0	2	28
32 x 2 x 14 x 8H	28,0	2	14	**75 x 3 x 24 x 7H**	72,0	3	24
35 x 2 x 16 x 8H	32,0	2	16	**80 x 3 x 25 x 8H**	75,0	3	25

Basic programme spline bores acc. to DIN 9611 (p.t.o. shaft spline)

Size	Width of keyway	No. of teeth	Tip circle	Root circle
1 3/8"	8,69	6	34,93	29,65
1 3/8"	–	21	34,95	34,80 [3]
1 3/4"	11,07	6	44,45	37,74
1 3/4"	–	20	45,20	40,20

Spline clamping hubs are often adapted to the shafts of hydraulic pumps/hydraulic motors. Please ask us about the corresponding hub length of the spline code!
[1] For clamping hubs only, for plug-in hubs use code PT or PQ.
[2] Profile correction different from DIN
[3] Similar to code PA-S

Inch bores and taper bores

Stock programme inch bores

Bore and keyway acc. to ANSI/AGMA 9002-C14 Bore (clearance fit) Keyway (commercial class fit)						Size									
						19	24	28	38	42	48	55	65	75	90
KTR code	Ø bore ["]	Width of keyway ["]	Ø bore [mm]	Width of keyway [mm]	Keyway depth/ tolerance +0,381 [mm]	Steel			Cast iron (GJL)						
Tb	3/8	1/8	9,525 +0,0254	3,175 +0,051	10,972										
DNB	7/16	3/32	11,112 +0,0254	2,382 + 0,051	12,293										
T	1/2	3/16	12,7 +0,0254	4,762 +0,051	14,757										
Ta	1/2	1/8	12,7+0,0254	3,175+0,051	14,224	●	●								
DNC	17/32	1/8	13,495 +0,0254	3,175+0,051	15,011										
Do	9/16	1/8	14,287 +0,0254	3,175+0,051	15,824										
E	5/8	1/8	15,875 +0,0254	3,175+0,051	17,424										
Es	5/8	5/32	15,875+0,0254	3,968+0,051	17,729	●	●	●							
Ed	5/8	3/16	15,875+0,0254	4,762+0,051	18,008	●	●								
DNH	11/16	3/16	17,462 +0,0254	4,762+0,051	19,634										
Ad	3/4	1/8	19,05+0,0254	3,175+0,051	20,624										
A	3/4	3/16	19,05+0,0254	4,762+0,051	21,259	●	●	●	●						
G	7/8	3/16	22,225+0,0254	4,762+0,051	24,485	●	●	●	●	●					
F	7/8	1/4	22,225+0,0254	6,35+0,051	25,069		●	●	●	●	●				
Gf	15/16	1/4	23,812 +0,0254	6,35+0,051	26,695										
H	1	3/16	25,4+0,0254	4,762+0,051	27,686										
Hs	1	1/4	25,4+0,0254	6,35+0,051	28,295			●	●						
R	1 1/16	3/16	26,987+0,0254	4,762+0,051	29,286										
Sb	1 1/8	1/4	28,575+0,0254	6,35+0,051	31,521			●	●						
Sd	1 1/8	5/16	28,575+0,0254	7,937 +0,051	32,105										
Js	1 1/4	1/4	31,75+0,0254	6,35+0,051	34,721				●						
K	1 1/4	5/16	31,75+0,0254	7,937 +0,051	35,331			●	●	●	●	●	●		
Ma	1 3/8	5/16	34,925+0,0254	7,937 +0,051	38,557			●	●						
RH1	1 3/8	3/8	34,925+0,0254	9,525+0,063	39,141										
Cb	1 7/16	3/8	36,512+0,0254	9,525+0,063	40,767										
Ca	1 1/2	5/16	38,1+0,0254	7,937+0,051	41,783										
C	1 1/2	3/8	38,1+0,0254	9,525+0,0635	42,392			●	●	●	●	●	●	●	
Nb	1 5/8	3/8	41,275+0,0254	9,525+0,0635	45,618				●	●					
Ls	1 3/4	3/8	44,45+0,0254	9,525+0,0635	48,818										
L	1 3/4	7/16	44,45+0,0254	11,112+0,0635	49,428						●	●			
Lu	1 7/8	1/2	47,625+0,0254	12,7+0,0635	53,238					●					
Da	1 15/16	1/2	49,212+0,0254	12,7+0,0635	54,864										
Ds	2	1/2	50,8+0,0254	12,7+0,0635	56,464										
Pa	2 1/8	1/2	53,975+0,0381	12,7+0,063	59,69										
U	2 1/4	1/2	57,15+0,0381	12,7+0,063	62,915										
Ub	2 3/8	5/8	60,325+0,0381	15,875+0,076	67,335										
Wd	3 3/8	7/8	85,725+0,0381	22,225+0,076	95,504										
Wf	3 5/8	7/8	92,075+0,0381	22,225+0,076	101,955										
Wf	3 5/8	7/8	92,075+0,0254	22,225+0,076	101,96										

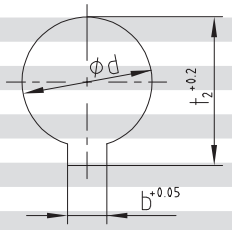

Basic programme taper 1:8

Code	$d^{+0,05}$	(d_2)	b^{JS9}	$t_2^{+0,1}$	l_K
N/ 1	9,7	7,575	$2,4^{+0,05}$	10,85	17,0
N/ 1c	11,6	9,5375	3^{JS9}	12,90	16,5
N/ 1e	13,0	10,375	$2,4^{+0,05}$	13,80	21,0
N/ 1d	14,0	11,813	3^{JS9}	15,50	17,5
N/ 1b	14,3	11,8625	$3,2^{+0,05}$	15,65	19,5
N/ 2	17,287	14,287	$3,2^{+0,05}$	18,24	24,0
N/ 2a	17,287	14,287	4^{JS9}	18,94	24,0
N/ 2b	17,287	14,287	3^{JS9}	18,34	24,0
N/ 3	22,002	18,502	4^{JS9}	23,40	28,0
N/ 4	25,463	20,963	$4,78^{+0,05}$	27,83	36,0
N/ 4b	25,463	20,963	5^{JS9}	28,23	36,0
N/ 4a	27,0	22,9375	$4,78^{+0,05}$	28,80	32,5
N/ 4g	28,45	23,6375	6^{JS9}	29,32	38,5
N/ 5	33,176	27,676	$6,38^{+0,05}$	35,39	44,0
N/ 5a	33,176	27,676	7^{JS9}	35,39	44,0

For code N/6 and N/6a keywith parallel to taper.

Basic programme taper 1:10

Code	$d^{+0,05}$	(d_2)	b^{JS9}	$t_2^{+0,1}$	l_K
CX	19,95	16,75	5^{JS9}	22,08	32
DX	24,95	20,45	6^{JS9}	26,68	45
EX	29,75	24,75	8^{JS9}	31,88	50

Basic programme taper 1:5

Code	$d^{+0,05}$	(d_2)	b_{JS9}	$t_2^{+0,1}$	l_K
A-10	9,85	7,55	2^{JS9}	1,0	11,5
B-17	16,85	13,15	3^{JS9}	1,8	18,5
C-20	19,85	15,55	4^{JS9}	2,2	21,5
Cs-22	21,95	17,65	3^{JS9}	1,8	21,5
D-25	24,85	19,55	5^{JS9}	2,9	26,5
E-30	29,85	23,55	6^{JS9}	2,6	31,5
F-35	34,85	27,55	6^{JS9}	2,6	36,5
G-40	39,85	32,85	6^{JS9}	2,6	35,0

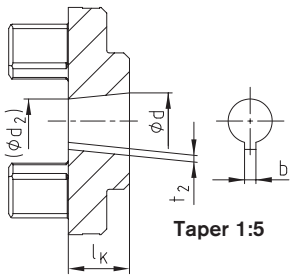

Taper 1:5

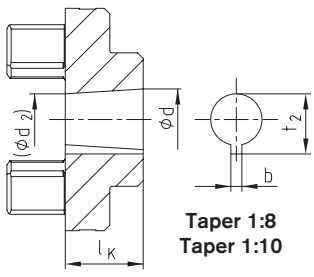

Taper 1:8
Taper 1:10

ROTEX® Standard
Flexible jaw couplings

Material cast + powder metal

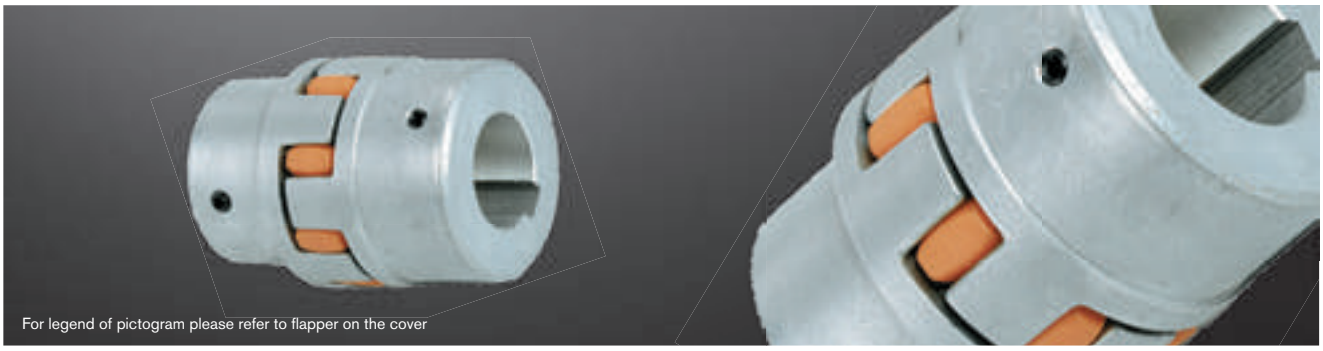

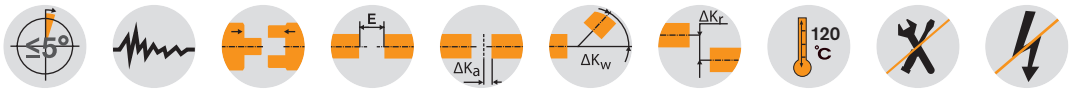

ROTEX® Sintered steel (Sint)																				
Size	Compo-nent	Spider (part 2) 1) Rated torque [Nm]			Finish bore d	Dimensions [mm]														
						General											Thread for setscrew			
		92 Sh-A	98 Sh-A	64 Sh-D		L	l_1; l_2	E	b	s	D_H	d_H	D	N	G	t	T_A [Nm]			
14	1a	7,5	12,5	16	unbored: 8, 10, 11, 12, 14, 15, 16	35	11	13	10	1,5	30	10	30	–	M4	5	1,5			
19	1a	10	17	21	unbored: 14, 16, 19, 20, 22, 24	66	25	16	12	2,0	40	18	40	–	M5	10	2			
24	1a	35	60	75	unbored: Ø 24	78	30	18	14	2,0	56	27	40	–	M5	10	2			

ROTEX® Aluminium diecast (Al-D)																				
19	1	10	17	—	6-19	66	25	16	12	2	41	18	32	20	M5	10	2			
	1a				19-24								41							
24	1	35	60	—	9-24	78	30	18	14	2	56	27	40	24	M5	10	2			
	1a				22-28								56							
28	1	95	160	—	10-28	90	35	20	15	2,5	66	30	48	28	M8	15	10			
	1a				28-38								66							

ROTEX® Cast iron (GJL)																				
	1				12-40	114	45						66	37						
38	1a	190	325	405	38-48			24	18	3	80	38	78		M8	15	10			
	1b				12-48	164	70							62						
	1				14-45	126	50						75	40						
42	1a	265	450	560	42-55			26	20	3	95	46	94		M8	20	10			
	1b				14-55	176	75							65						
	1				15-52	140	56						85	45						
48	1a	310	525	655	48-62			28	21	3,5	105	51	104		M8	20	10			
	1b				15-62	188	80							69						
55	1	410	685	825	20-60	160	65	30	22	4	120	60	98	52	M10	20	17			
	1a				55-74								118							
65	1	625	940	1175	22-70	185	75	35	26	4,5	135	68	115	61	M10	20	17			
75	1	1280	1920	2400	30-80	210	85	40	30	5	160	80	135	69	M10	25	17			
90	1	2400	3600	4500	40-100	245	100	45	34	5,5	200	100	160	81	M12	30	40			

ROTEX® Nodular iron (GJS)																				
100	1	3300	4950	6185	50-115	270	110	50	38	6	225	113	180	89	M12	30	40			
110	1	4800	7200	9000	60-125	295	120	55	42	6,5	255	127	200	96	M16	35	80			
125	1	6650	10000	12500	60-145	340	140	60	46	7	290	147	230	112	M16	40	80			
140	1	8550	12800	16000	60-160	375	155	65	50	7,5	320	165	255	124	M20	45	140			
160	1	12800	19200	24000	80-185	425	175	75	57	9	370	190	290	140	M20	50	140			
180	1	18650	28000	35000	85-200	475	195	85	64	10,5	420	220	325	156	M20	50	140			

■ = If no material is specified in the order, it is stipulated in the calculation/order.
[1] Maximum torque of the coupling $T_{Kmax.}$ = rated torque of the coupling $T_{K\ rated}$ x 2. For selection see page 10 et seqq.

Ordering example:	ROTEX® 38	GJL	92 Sh-A	1a	Ø 45	1	Ø 25
	Coupling size	Material	Spider hardness	Component	Finish bore	Component	Finish bore

Components

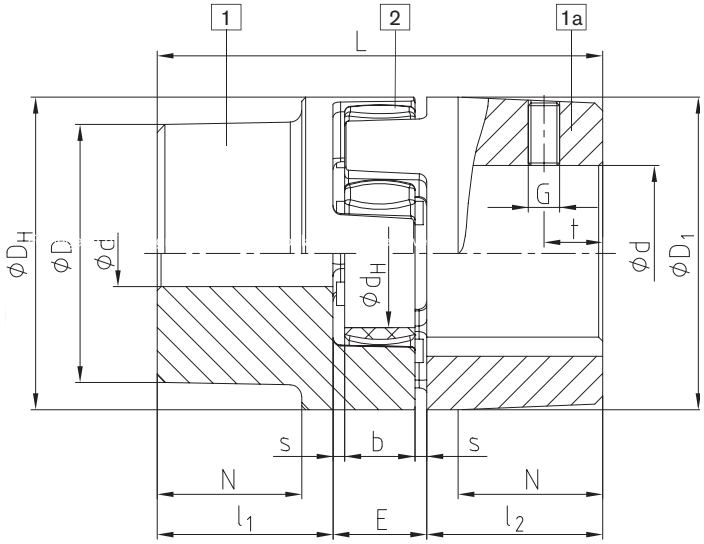

AL-D (thread opposite to the keyway)

Spider
Hardness 92Sh-A, 98Sh-A, 64Sh-D
Standard from size 14 - 180

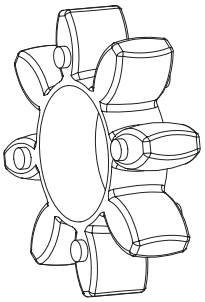

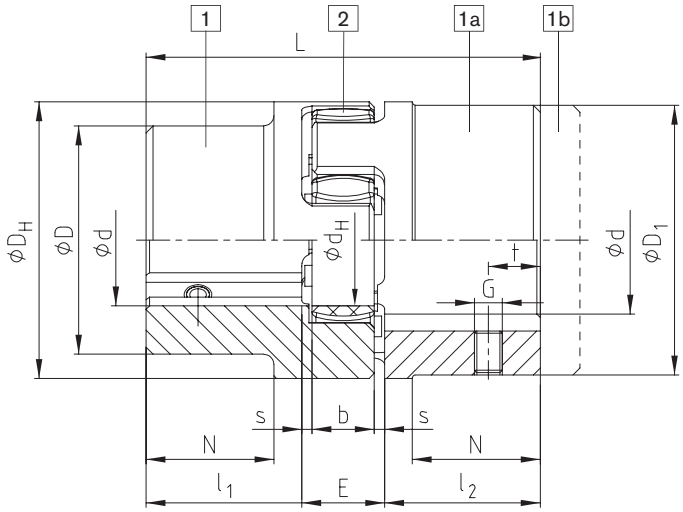

GJL / GJS (thread on the keyway)

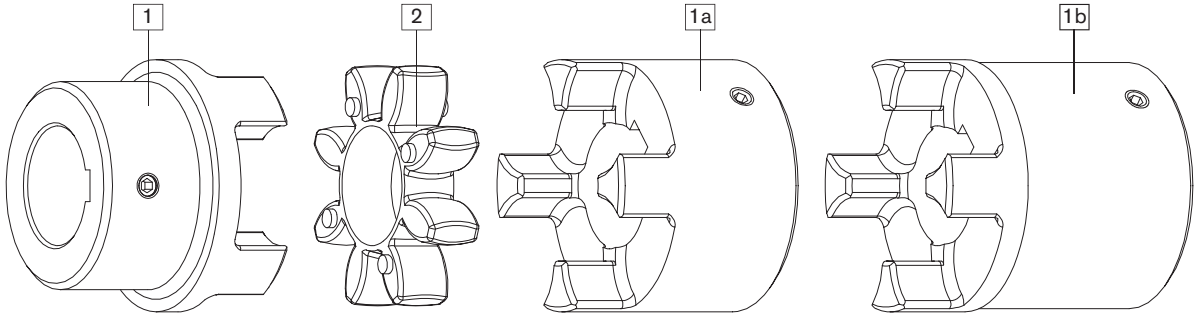

Standard hub | Spider | Large hub | Large hub lengthened

ROTEX® Standard
Flexible jaw couplings

Material steel

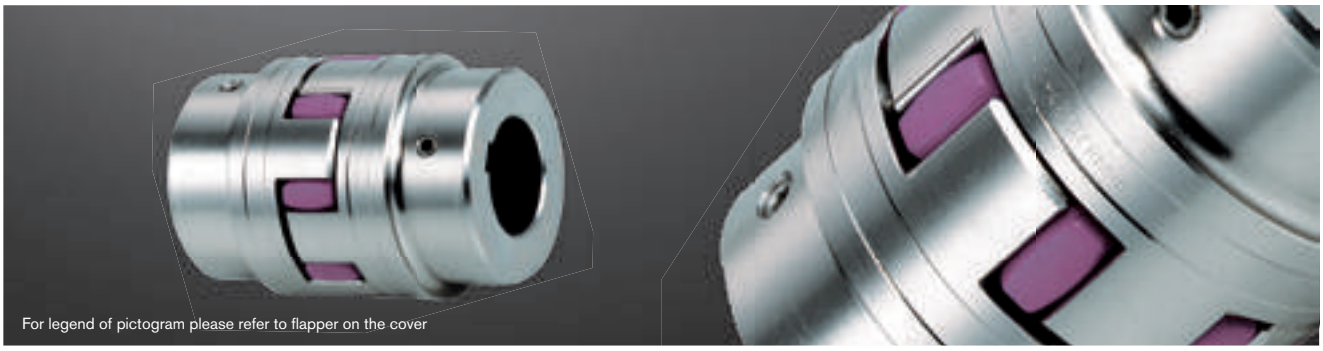

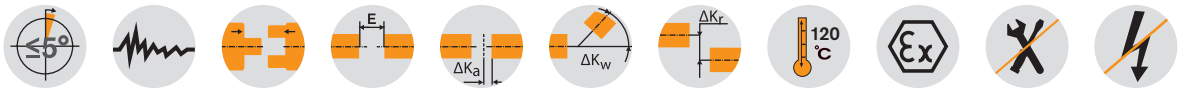

ROTEX® Steel (St)

Size	Compo-nent	Spider (part 2) rated torque [Nm]			Dimensions [mm]												
					Finish bore	General									Thread for setscrew		
		92 Sh-A	98 Sh-A	64 Sh-D	d (min-max)	L	l_1; l_2	E	b	s	D_H	d_H	D	N	G	t	T_A [Nm]
14	1a	7,5	12,5	16	0-16	35	11	13	10	1,5	30	10	30	—	M4	5	1,5
	1b					50	18,5										
19	1a	10	17	21	0-25	66	25	16	12	2	40	18	40	—	M5	10	2
	1b					90	37										
24	1a	35	60	75	0-35	78	30	18	14	2	55	27	55	—	M5	10	2
	1b					118	50										
28	1a	95	160	200	0-40	90	35	20	15	2,5	65	30	65	—	M8	15	10
	1b					140	60										
38	1	190	325	405	0-48	114	45	24	18	3	80	38	70	27	M8	15	10
	1b					164	70						80	—			
42	1	265	450	560	0-55	126	50	26	20	3	95	46	85	28	M8	20	10
	1b					176	75						95	—			
48	1	310	525	655	0-62	140	56	28	21	3,5	105	51	95	32	M8	20	10
	1b					188	80						105	—			
55	1	410	685	825	0-74	160	65	30	22	4	120	60	110	37	M10	20	17
	1b					210	90						120	—			
65	1	625	940	1175	0-80	185	75	35	26	4,5	135	68	115	47	M10	20	17
	1b					235	100						135	—			
75	1	1280	1920	2400	0-95	210	85	40	30	5	160	80	135	53	M10	25	17
	1b					260	110						160	—			
90	1	2400	3600	4500	0-110	245	100	45	34	5,5	200	100	160	62	M12	30	40
	1b					295	125						200	—			
100	1	3300	4950	6185	0-115	270	110	50	38	6	225	113	180	89	M12	30	40
110	1	4800	7200	9000	0-125	295	120	55	42	6,5	255	127	200	96	M16	35	80
125	1	6650	10000	12500	60-145	340	140	60	46	7	290	147	230	112	M16	40	80
140	1	8550	12800	16000	60-160	375	155	65	50	7,5	320	165	255	124	M20	45	140
160	1	12800	19200	24000	80-185	425	175	75	57	9	370	190	290	140	M20	50	140
180	1	18650	28000	35000	85-200	475	195	85	64	10,5	420	220	325	156	M20	50	140

■ = If no material is specified in the order, it is stipulated in the calculation/order.
[1] Maximum torque of coupling $T_{Kmax.}$ = rated torque of coupling $T_{K\ rated}$ x 2. For selection see page 10 et seqq.

Use in fire extinguisher pumps
ROTEX® couplings comply with the specifications of NFPA 20 standard for the installation of stationary pumps for fire protection and on completion of the necessary permanent tests they also comply with the specifications of UL 448A, flexible couplings and connection shafts for stationary fire extinguisher pumps.

Sizes available:



ROTEX® UL-Listed

Size	Compo-nent	Material	Spider (part 2) Rated torque [Nm]	Dimensions [mm]				
			92 Sh-A	Finish bore d (min-max)	L	l_1; l_2	E	D_H
42	1	St	265	18-55	126	50	26	95
55	1	St	410	24-74	160	65	30	120
65	1	St	625	24-80	185	75	35	135
75	1	St	1280	24-95	210	85	40	160
90	1	St	2400	30-110	245	100	45	200

* For complete dimensions see table on page 36

Ordering example:

ROTEX® 38	St	92 Sh-A	1 – Ø 45		1 – Ø 25	
Coupling size	Material	Spider hardness	Component	Finish bore	Component	Finish bore

Components

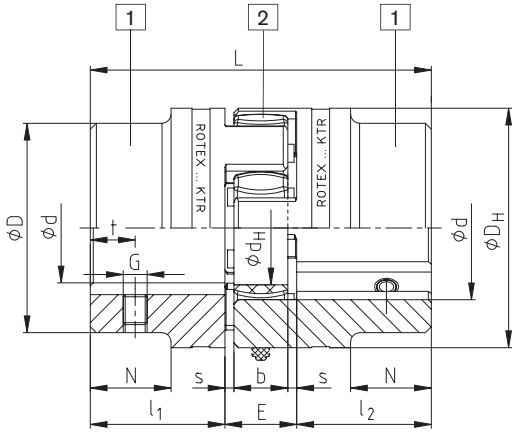

Steel (thread on the keyway)

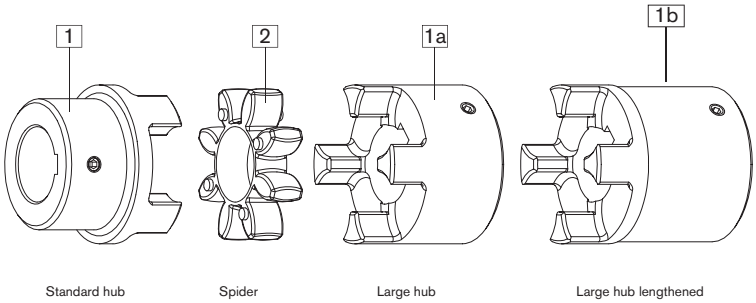

ROTEX coupling hubs with test certificate [1]				
Size	Component	Material [2]	Inspection certificate acc. to DIN EN 10204	Notch impact strength
19	1a	S355[2]	3.1	>=27 J
24	1a	S355[2]	3.1	>=27 J
28	1a	S355[2]	3.1	>=27 J
38	1a	S355[2]	3.1	>=27 J
42	1	S355[2]	3.1	>=27 J
48	1	S355[2]	3.1	>=27 J
55	1	S355[2]	3.1	>=27 J
65	1	S355[2]	3.1	>=27 J
75	1	S355[2]	3.1 / 3.2	>=27 J
		42CrMoS4+QT[3]		
90	1	S355[2]	3.1 / 3.2	>=27 J
		42CrMoS4+QT[3]		
100	1	S355[2]	3.1 / 3.2	>=27 J
		42CrMoS4+QT[3]		
110	1	S355[2]	3.1 / 3.2	>=27 J
		42CrMoS4+QT[3]		
120	1	S355[2]	3.1 / 3.2	>=27 J
		42CrMoS4+QT[3]		
140	1	S355[2]	3.1 / 3.2	>=27 J
		42CrMoS4+QT[3]		
160	1	S355[2]	3.1 / 3.2	>=27 J
		42CrMoS4+QT[3]		
180	1	S355[2]	3.1 / 3.2	>=27 J
		42CrMoS4+QT[3]		

[1] S355 suitable for feather key connections, 42CrMoS4+QT for oil press-fits
[2] Notch impact strength with -40°C
[3] Notch impact strength with -20°C

Marine programme:
Hub materials S355J2+N and 42CrMo4+QT acc. to DIN EN10204-3.1+3.2 size 75-180 available from stock.

ROTEX® Standard
Flexible jaw couplings

Material aluminium

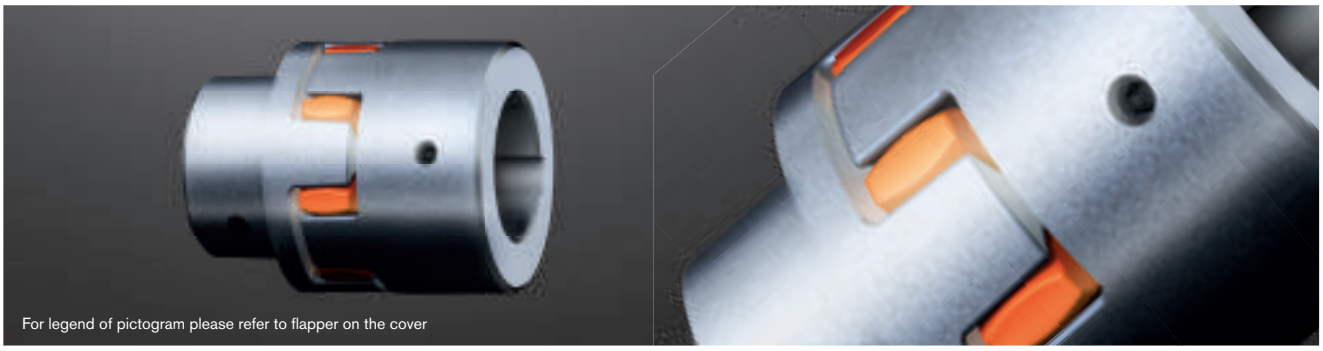

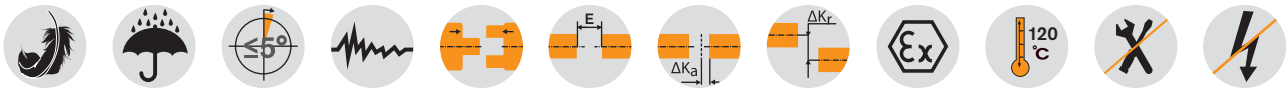

Components

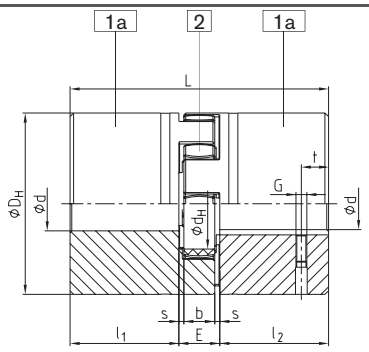

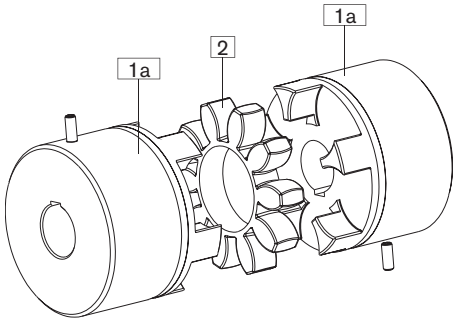

ROTEX® Aluminium (AL-H)														
Size	Compo-nent	Spider (part 2) Rated torque [Nm]		Dimensions [mm]										
				Finish bore	General							Thread for setscrew		
		92 Sh-A GS	98 Sh-A GS	d (max)	L	l_1; l_2	E	b	s	D_H	d_H	G	t	T_A [Nm]
5	1	0,5	0,9	6	15	5	5	4	0,5	10	-	M2	2,5	-
7	1	1,2	2,0	7	22	7	8	6	1,0	14	-	M3	3,5	-
9	1	3,0	5,0	11	30	10	10	8	1,0	20	7,2	M4	5	1,5
12	1	5,0	9,0	12	34	11	12	10	1,0	25	8,5	M4	5	1,5
14	1	7,5	12,5	16	35	11	13	10	1,5	30	10,5	M4	5	1,5
19	1	10	17	24	66	25	16	12	2,0	40	18	M5	10	2
24	1	35	60	28	78	30	18	14	2,0	55	27	M5	10	2
28	1	95	160	38	90	35	20	15	2,5	65	30	M8	15	10
38	1	190	325	45	114	45	24	18	3,0	80	38	M8	15	10
42	1	265	450	55	126	50	26	20	3,0	95	46	M8	20	10
48	1	310	525	62	140	56	28	21	3,0	105	51	M8	20	10

As a standard the coupling is provided with a ROTEX®-GS spider (ROTEX® standard spider is available on request, too)

Ordering example:

ROTEX® 19	Al-H	92 Sh-A GS	1 – Ø 15		1 – Ø 20	
Coupling size	Material	Spider hardness	Component	Finish bore	Component	Finish bore

Material steel with CDP coating, stainless steel

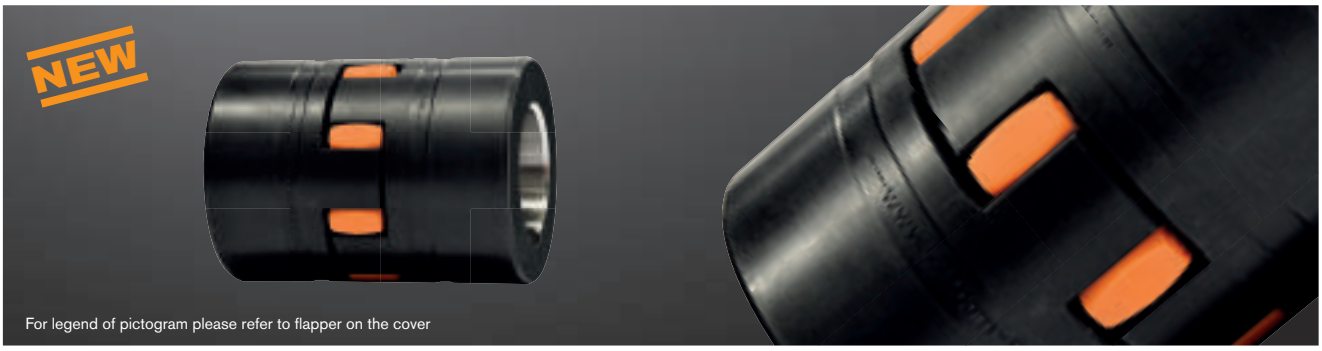

Components

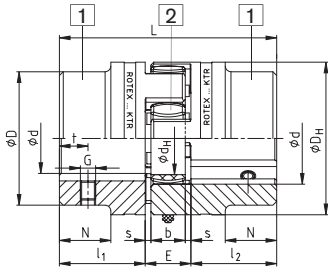

Steel (thread on the keyway)

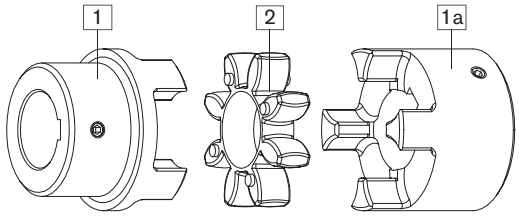

Standard hub Spider Large hub

ROTEX® with CDP coating[1]																		
Size	Compo-nent	Spider (part 2) Rated torque [Nm]			Dimensions [mm]													
					Finish bore	General									Thread for setscrew			
		92 Sh-A	98 Sh-A	64 Sh-D	d (min-max)	L	$l_1; l_2$	E	b	s	D_H	d_H	D	N	G	t	T_A [Nm]	
19	1a	10	17	21	0-25	66	25	16	12	2	40	18	40	–	M5	10	2	
24	1a	35	60	75	0-35	78	30	18	14	2	55	27	55	–	M5	10	2	
28	1a	95	160	200	0-40	90	35	20	15	2,5	65	30	65	–	M8	15	10	
38	1	190	325	405	0-48	114	45	24	18	3	80	38	70	27	M8	15	10	
42	1	265	450	560	0-55	126	50	26	20	3	95	46	85	28	M8	20	10	
48	1	310	525	655	0-62	140	56	28	21	3,5	105	51	95	32	M8	20	10	
55	1	410	685	825	0-74	160	65	30	22	4	120	60	110	37	M10	20	17	
65	1	625	940	1175	0-80	185	75	35	26	4,5	135	68	115	47	M10	20	17	
75	1	1280	1920	2400	0-95	210	85	40	30	5	160	80	135	53	M10	25	17	
90	1	2400	3600	4500	0-110	245	100	45	34	5,5	200	100	160	62	M12	25	40	
100	1	3300	4950	6185	0-115	270	110	50	38	6	225	113	180	89	M12	30	40	
110	1	4800	7200	9000	0-125	295	120	55	42	6,5	255	127	200	96	M16	35	80	
125	1	6650	10000	12500	60-145	340	140	60	46	7	290	147	230	112	M16	40	80	

[1] Corrosion protection class to DIN EN ISO 12944: Min. C4, heavy-long

ROTEX® Stainless steel																	
Size	Material	Spider (part 2) Rated torque [Nm]			Dimensions [mm]												
					Finish bore d (min - max)	General									Thread for setscrew		
		92 Sh-A	98 Sh-A	64 Sh-D		L	$l_1; l_2$	E	b	s	D_H	d_H	D	N	G	t	T_A [Nm]
19	1.4305	10	17	21	0-25	66	25	16	12	2	40	18	40	-	M5	10	2
24	1.4571	35	60	75	0-35	78	30	18	14	2	55	27	55	-	M5	10	2
28	1.4305	95	160	200	0-40	90	35	20	15	2,5	65	30	65	-	M8	15	10
38	1.4571	190	325	405	0-48	114	45	24	18	3	80	38	70	27	M8	15	10
42	1.4305	265	450	560	0-55	126	50	26	20	3	95	46	85	28	M8	20	10
48	1.4571	310	525	655	0-62	140	56	28	21	3,5	105	51	95	32	M8	20	10

Ordering example:

ROTEX® 38	St+KTL	92 Sh-A	1 – Ø 45		1 – Ø 25	
Coupling size	Material	Spider hardness	Component	Finish bore	Component	Finish bore

Taper clamping bush

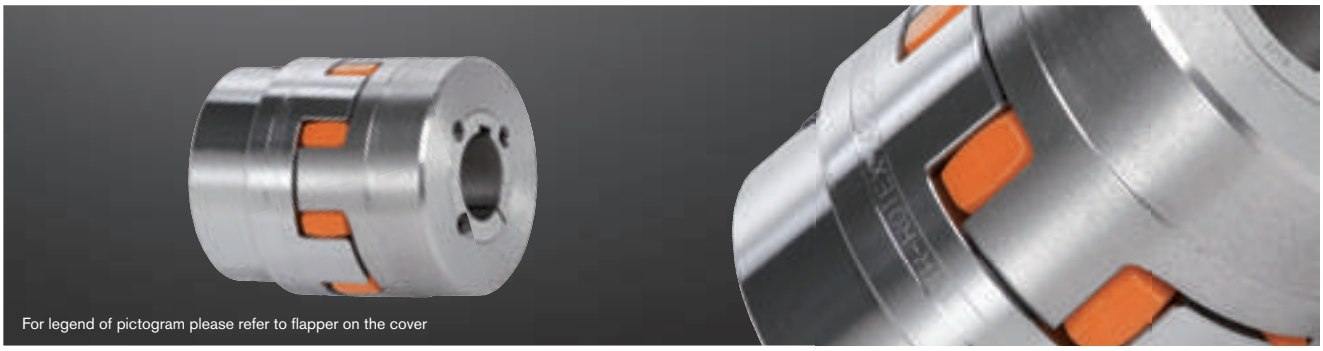

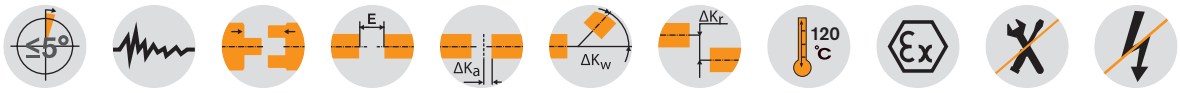

Components

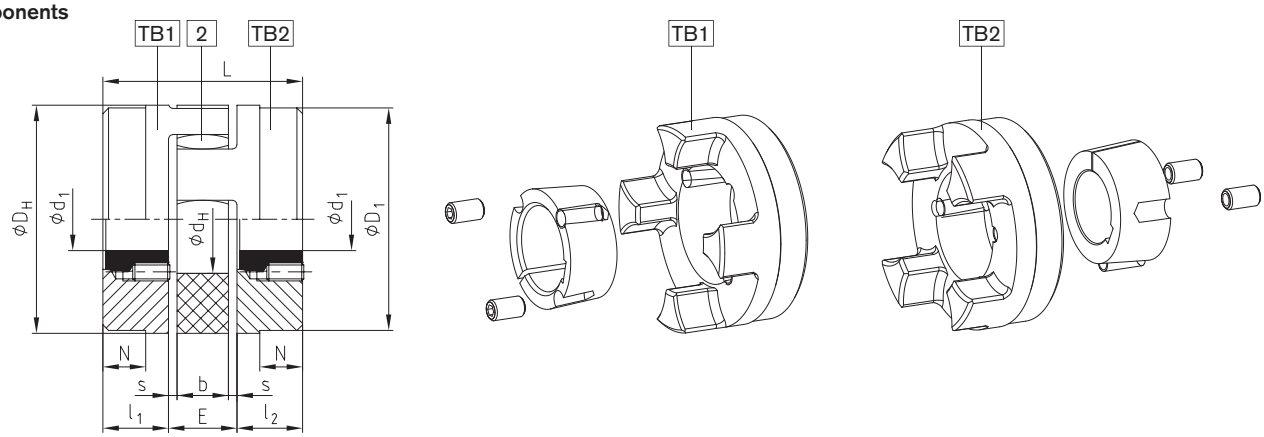

ROTEX® Shaft coupling for taper clamping bush															
Size	Taper clamping bush	Dimensions [mm]									Fastening screw for taper bush				
		$l_1;l_2$	E	s	b	L	N	D_H	D_1	d_H	Size [Inch]1)	Length [mm]	No. z	T_A [Nm]	
24	1008	22	18	2,0	14	62	–	55	55	27	1/4	13	2	5,7	
28	1108	23	20	2,5	15	66	–	65	65	30	1/4"	13	2	5,7	
38	1108	23	24	3,0	18	70	15	80	78	38	1/4"	13	2	5,7	
42	1610	26	26	3,0	20	78	16	95	94	46	3/8"	16	2	20	
48	1615	39	28	3,5	21	106	28	105	104	51	3/8"	16	2	20	
55	2012	33	30	4,0	22	96	20	120	118	60	7/16"	22	2	31	
65	2012	33	35	4,5	26	101	19	135	115	68	7/16"	22	2	31	
75	2517	52	40	5,0	30	144	36	160	158	80	1/2"	25	2	49	
	• 3020										5/8"	32		92	
90	3020	52	45	5,5	34	149	33	200	160	100	5/8"	32	2	92	
100	3535	90	50	6	38	230	69	225	180	113	1/2"	49	3	113	
125	4545	114	60	7,0	46	288	86	290	230	147	3/4"	49	3	192	

Taper clamping bush																			
Size	Bore dimensions d1 [mm] available; H7 fit – feather keyway acc. to DIN 6885 sheet 1.																		
1008	Ø10	Ø11	Ø12	Ø14	Ø16	Ø18	Ø19	Ø20	Ø22	Ø24	Ø25								
1108	Ø10	Ø11	Ø12	Ø14	Ø16	Ø18	Ø19	Ø20	Ø22	Ø24	Ø25	Ø28[2)]							
1610	Ø14	Ø16	Ø18	Ø19	Ø20	Ø22	Ø24	Ø25	Ø28	Ø30	Ø32	Ø35	Ø38	Ø40	Ø42*				
1615	Ø14	Ø16	Ø18	Ø19	Ø20	Ø22	Ø24	Ø25	Ø28	Ø30	Ø32	Ø35	Ø38	Ø40	Ø42*				
2012	Ø14	Ø16	Ø18	Ø19	Ø20	Ø22	Ø24	Ø25	Ø28	Ø30	Ø32	Ø35	Ø38	Ø40	Ø42	Ø45	Ø48	Ø50	
2517	Ø16	Ø18	Ø19	Ø20	Ø22	Ø24	Ø25	Ø28	Ø30	Ø32	Ø35	Ø38	Ø40	Ø42	Ø45	Ø48	Ø50	Ø55	Ø60
3020	Ø25	Ø28	Ø30	Ø35	Ø38	Ø40	Ø42	Ø45	Ø48	Ø50	Ø55	Ø60	Ø65	Ø70	Ø75				
3535	Ø35	Ø38	Ø40	Ø42	Ø45	Ø48	Ø50	Ø55	Ø60	Ø65	Ø70	Ø75	Ø80	Ø85	Ø90				
4545	Ø55	Ø60	Ø65	Ø70	Ø75	Ø80	Ø85	Ø90	Ø95	Ø100	Ø105	Ø110							

• Only available for type TB 2
[1)] 1. BSW Thread
Coupling type TB 1/1; TB 2/2; TB 1/2 possible
Please order our separate dimension sheet (M 373054).
[2)] Bores with feather keyway (flat design) acc. to DIN 6885 sheet 3

Ordering example:

ROTEX® 38	92 Sh-A	1108	TB1 – Ø 24		TB2 – Ø 22	
Coupling size	Spider hardness	Taper clamping bush	Hub type	Finish bore	Hub type	Finish bore

Clamping ring hubs



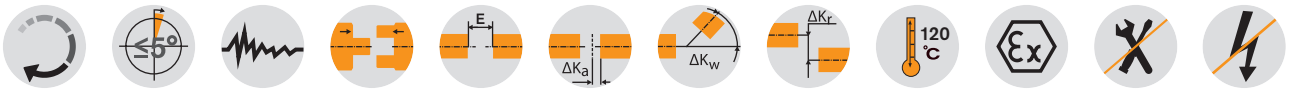

Components

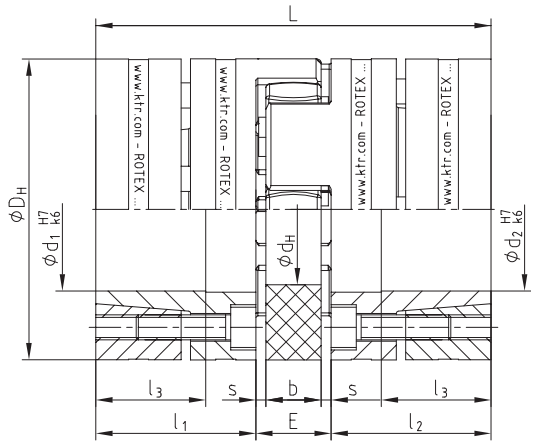

Tack thread M1 between clamping screws

Clamping ring hubs steel

Size	Torques [Nm] 1)				Dimensions [mm]								Clamping screws				Weight per hub with max. bore [kg]	Mass moment of inertia per hub with max. bore [kgm2]
	92 Sh-A		98 Sh A															
	T_{KN}	T_{Kmax}	T_{KN}	T_{Kmax}	D_H 2)	d_H	L	l_1; l_2	l_3	E	b	s	M	Num-ber z	T_A[Nm]	M_1		
19	10,0	20	17	34	40	18	66	25	18	16	12	2,0	M4	6	4,1	M4	0,179	0,44 x 10^{-4}
24	35,0	70	60	120	55	27	78	30	22	18	14	2,0	M5	4	8,5	M5	0,399	1,91 x 10^{-4}
28	95,0	190	160	320	65	30	90	35	27	20	15	2,5	M5	8	8,5	M5	0,592	4,18 x 10^{-4}
38	190,0	380	325	650	80	38	114	45	35	24	18	3,0	M6	8	14	M6	1,225	12,9 x 10^{-4}
42	265	530	450	900	95	46	126	50	35	26	20	3,0	M8	4	35	M8	2,30	31,7 x 10^{-4}
48	310	620	525	1050	105	51	140	56	41	28	21	3,5	M10	4	69	M10	3,08	52,0 x 10^{-4}
55	375	750	685	1370	120	60	160	65	45	30	22	4,0	M10	4	69	M10	4,67	103,0 x 10^{-4}
65	—	—	940	1880	135	68	185	75	55	35	26	4,5	M12	4	120	M12	6,70	191,0 x 10^{-4}
75	—	—	1920	3840	160	80	210	85	63	40	30	5,0	M12	5	120	M12	9,90	396,8 x 10^{-4}
90	—	—	3600	4500	200	104	245	100	75	45	34	5,5	M16	5	295	M16	17,70	1136 x 10^{-4}

Bore d1/d2 and the corresponding transmittable friction torques TR of clamping ring hub in [Nm] 1)

Size	Ø10	Ø11	Ø14	Ø15	Ø16	Ø19	Ø20	Ø24	Ø25	Ø28	Ø30	Ø32	Ø35	Ø38	Ø40	Ø42	Ø45	Ø48	Ø50	Ø55	Ø60	Ø65	Ø70	Ø80	Ø90	Ø95	Ø100	Ø105
19	27	32	69	84	57	94	110																					
24			70	87	56	97	114	116	133	192																		
28				108	131	207	148	253	285	315	382	330	433	503														
38							208	353	395	439	531	463	603	593	689	793	776											
42									358	398	483	416	547	536	625	571	704	851	865									
48											616	704	899	896	1030	962	1160	1379	1222	1543								
55													863	856	991	918	1119	1110	1247	1277	1672	1605	2008					
65															1446	1355	1637	1635	1827	1887	2429	2368	2930					
75																1710	2053	2059	2294	2384	3040	2983	3664	4293				
90																			3845	4249	4794	5858	5900	7036	8047	9247	9575	10845

1) Please see coupling selection on page 10 et seqq.
2) $ØD_H$ + 2 mm with high speeds for expansion of spider
The transmittable torques of the clamping connection consider the max. clearance with shaft fit k6 / bore H7, from Ø55 G7/m6. The torque is reduced with bigger clearance. For the stiffness calculation of the shaft/hollow shaft see KTR standard 45510 on our homepage www.ktr.com

Ordering example:

ROTEX® GS 24	98 Sh-A	6.0 Steel	Ø24	6.0 Steel	Ø20
Coupling size	Spider hardness	Hub type	Finish bore	Hub type	Finish bore

Clamping hubs

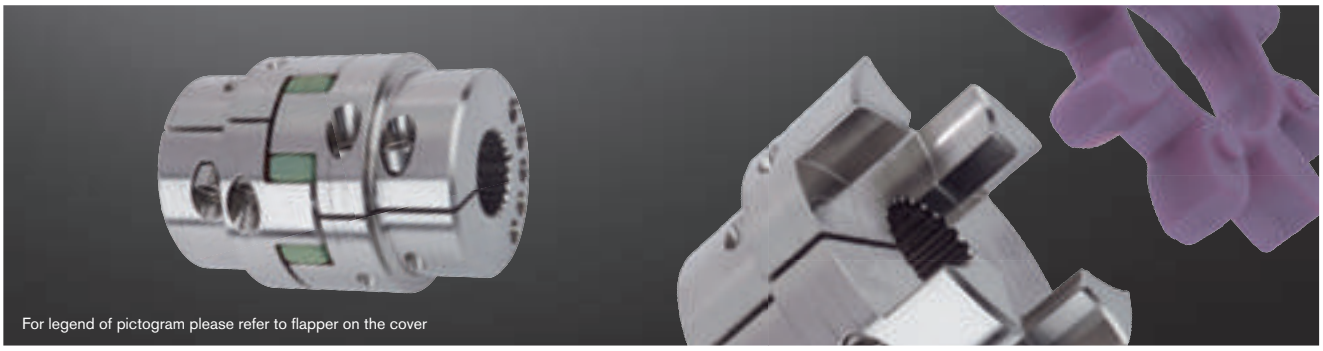

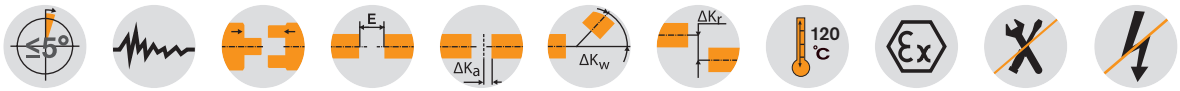

Components

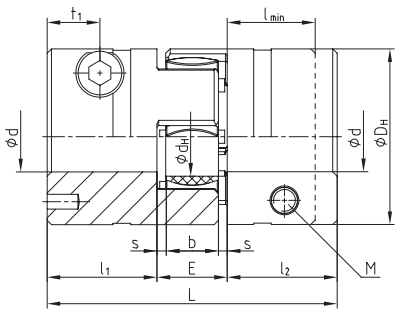

ROTEX® 19 - 28

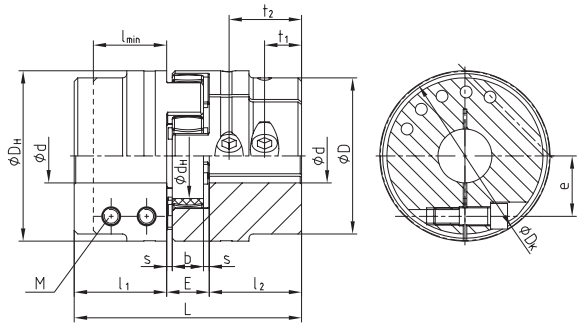

ROTEX® 38 - 90

ROTEX® as clamping hubs																
Size	Dimensions [mm]														Screw DIN EN ISO 4762	
	max. d	L	l_1;l_2	$l_{Min.}$	E	b	s	D_H	D	d_H	D_K	t_1	t_2	e	M	T_A [Nm]
19	20[1]	66	25	20	16	12	2,0	40	-	18	46,0	12	—	14,5	M6	14
24	28	78	30	25	18	14	2,0	55	-	27	57,5	12	—	20,0	M6	14
28	38	90	35	30	20	15	2,5	65	-	30	73,0	14[2]	—	25,0	M8	35
38	42	114	45	35	24	18	3,0	80	70	38	77,5	19	—	26,5	M8	35
42	50	126	50	42	26	20	3,0	95	85	46	93,5	18[2]	—	32,0	M10	69
48	55	140	56	46	28	21	3,5	105	95	51	105,0	21[2]	—	36,0	M12	120
55	68	160	65	50	30	22	4,0	120	110	60	119,5	26	51[2]	42,5[3]	M12	120
65	70	185	75	55	35	26	4,5	135	115	68	132,5	33	61[2]	50,0[3]	M12	120
75	80	210	85	65	40	30	5,0	160	135	80	158,0	36	68[2]	57,0[3]	M16	295
90	90	245	100	80	45	34	5,5	200	160	100	197,0	40	80[2]	72,0[3]	M20	580

Bore surface and the corresponding transmittable friction torques [Nm] of ROTEX® clamping hubs design 2.0																													
Size	Ø8	Ø10	Ø11	Ø14	Ø15	Ø16	Ø18	Ø19	Ø20	Ø22	Ø24	Ø25	Ø28	Ø30	Ø32	Ø35	Ø38	Ø40	Ø42	Ø45	Ø48	Ø50	Ø55	Ø60	Ø65	Ø70	Ø75	Ø80	Ø85	Ø90
19	44	46	47	51	52	53	55	57	58																					
24		59	60	64	65	66	68	70	71	73	76	77	80																	
28				139	141	144	148	150	152	157	161	163	170	174	178	185	191													
38					163	165	170	172	174	178	183	185	192	196	200	207	213	217	222											
42									291	297	304	308	318	325	332	342	353	360	367	377	387	394								
48									466	476	486	491	506	516	526	542	557	567	577	592	607	618	643							
55															1185	1215	1245	1266	1286	1316	1347	1367	1417	1468	1519					
65																1316	1347	1367	1387	1417	1448	1468	1519	1569	1620	1671				
75																			2869	2926	2983	3022	3117	3213	3309	3404	3500	3595		
90																			5220	5310	5400	5460	5610	5760	5910	6060	6210	6360	6510	6660

[1] With type 2.1 dmax. Ø17 mm
[2] With reduced hubs dimension t1 varies or the number of screws changes from 2-off to 1-off
[3] t1 and t2 have a different dimension e

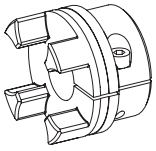

Type 2.0
Clamping hub, single slot, without feather keyway

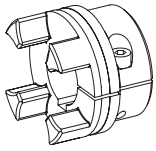

Type 2.1
Clamping hub, single slot, with feather keyway

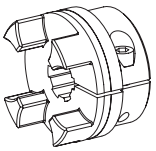

Type 2.3
Clamping hub with spline bore (For a selection of our programme of spline bores please see page 32)

Ordering example:

ROTEX® 24	98 Sh-A	2.1	Ø 24	2.0	Ø20
Coupling size	Spider hardness	Hub type	Finish bore	Hub type	Finish bore

Flange programme

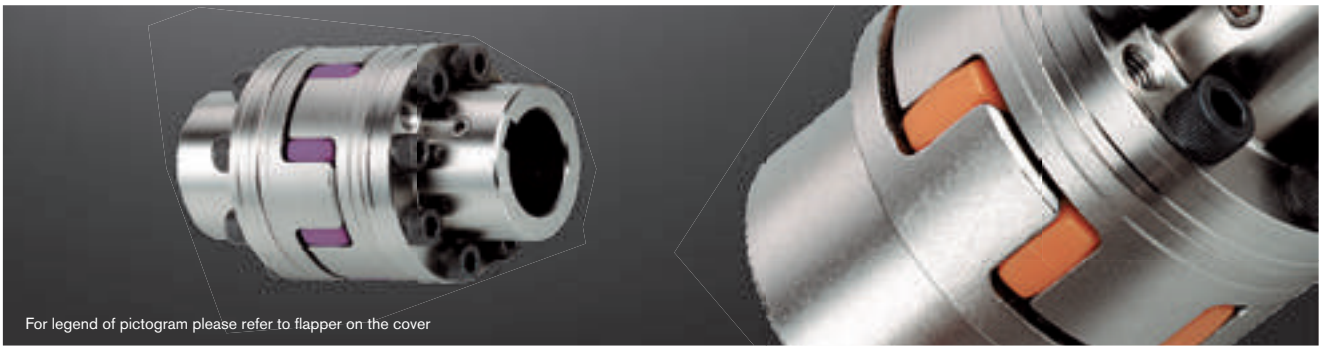

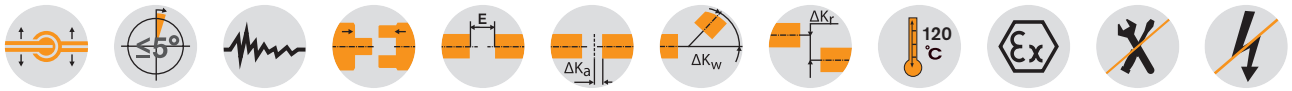

Components

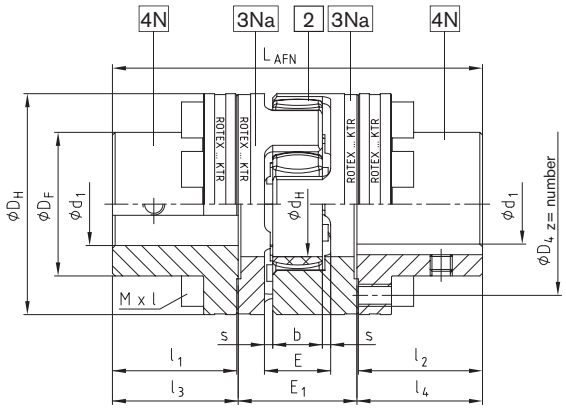

Type AFN

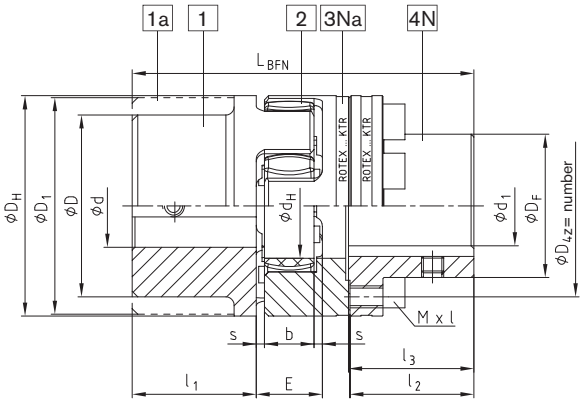

Type BFN

ROTEX® Type AFN (No. 002) and BFN (No. 004)																		
Size	Pilot bored Ød;ØD; ØD1	Component 4N max. finish bore Ød1	Dimensions [mm]													Cap screws 3) DIN EN ISO 4762 - 12.9			
			D_H	D_F	D_4	d_H	l_1; l_2	E	E_1	s	b	l_3; l_4	L_{AFN}	L_{BFN}		Mxl	z	Pitch 2)	[1] T_A [Nm]
24	See jaw couplings on page 34 to 39 Stock programme/basic programme on page 32 and 33	24	55	36	45	27	30	18	33	2,0	14	30,5	94	86		M5x16	8		10
28		28	65	42	54	30	35	20	39	2,5	15	35,5	110	100		M6x20	8	8x45°	17
38		38	80	52	66	38	45	24	43	3,0	18	45,5	134	124		M8x22	8		41
42		42	95	62	80	46	50	26	48	3,0	20	51,0	150	138		M8x25	12	16x22,5°	41
48		48	105	70	90	51	56	28	50	3,5	21	57,0	164	152		M8x25	12		41
55		55	120	80	102	60	65	30	60	4,0	22	66,0	192	176		M10x30	8	8x45°	83
65		65	135	94	116	68	75	35	65	4,5	26	76,0	217	201		M10x30	12	16x22,5°	83
75		75	160	108	136	80	85	40	75	5,0	30	86,5	248	229		M12x40	15		120
90		100	200	142	172	100	100	45	82	5,5	34	101,5	285	265		M16x40	15		295
100		110	225	158	195	113	110	50	97	6,0	38	111,5	320	295		M16x50	15		295
110		125	255	178	218	127	120	55	103	6,5	42	122,0	347	321		M20x50	15	20x18°	580
125		145	290	206	252	147	140	60	116	7,0	46	142,0	400	370		M20x60	15		580
140		165	320	235	282	165	155	65	128	7,5	50	157,5	443	409		M20x60	15		580
160		190	370	270	325	190	175	75	146	9,0	57	177,5	501	463		M24x70	15		1000
180		220	420	315	375	220	195	85	159	10,5	64	198,0	555	515		M24x80	18	24x15°	1000

[1] Screw tightening torque T_A [Nm].
[2] Thread in driving flange between cams.
[3] Coupling is delivered not assembled.

Ordering example:

ROTEX® 24	AFN	92 Sh-A	4N	Ø 38	4N	Ø35
Coupling size	Type	Spider hardness	Component	Finish bore	Component	Finish bore

Drop-out center design coupling

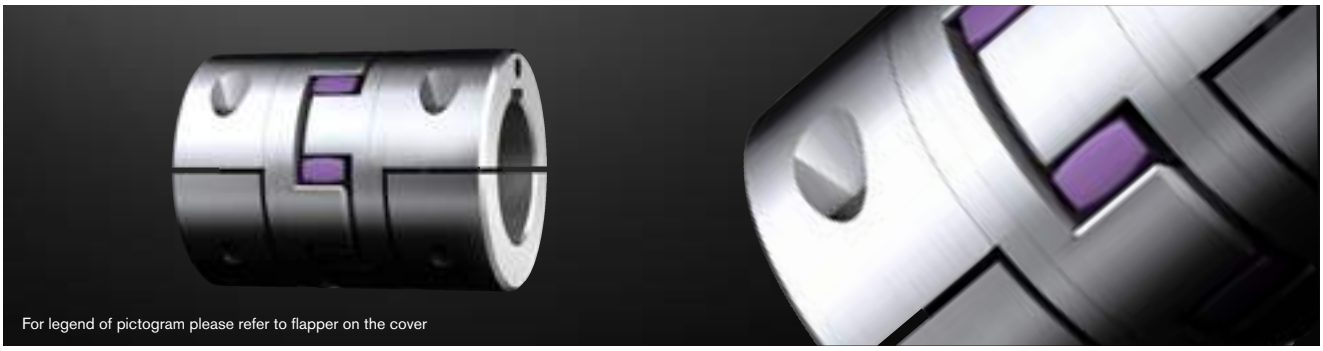

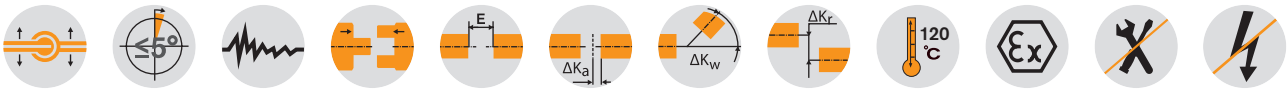

Components

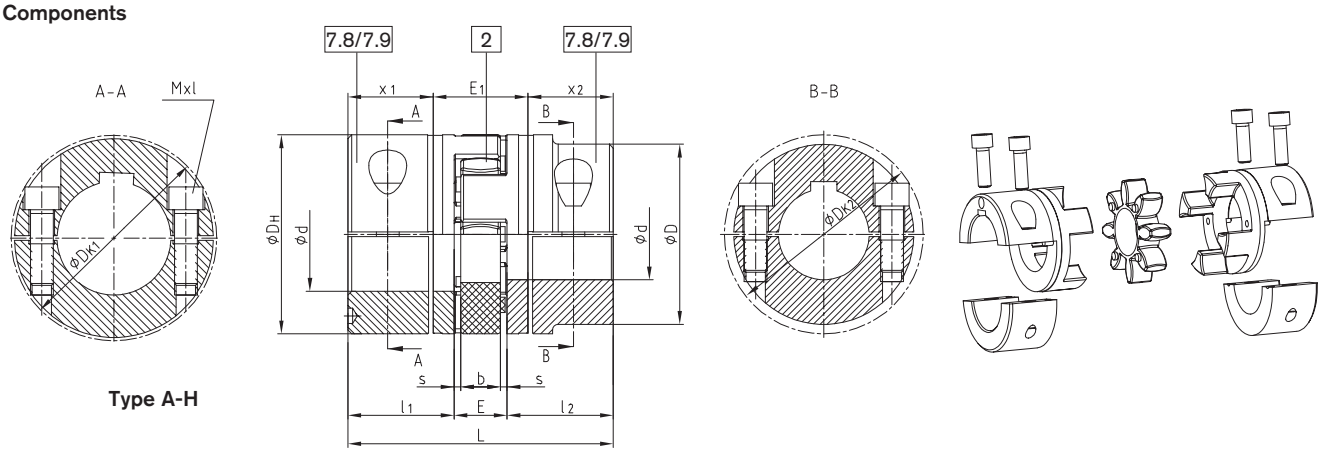

Type A-H

ROTEX® Type A-H														
Size	Max. finish bore Ød [mm]	Dimensions [mm]											Cap screws DIN EN ISO 4762	
		L	l_1; l_2	E	b	s	D_H	D	D_{K1}	D_{K2}	x_1/x_2	E_1	Mxl	Tightening torque T_A [Nm]
19	20	66	25	16	12	2,0	40	—	46	—	17,5	31	M6x16	14
24	28	78	30	18	14	2,0	55	—	57,5	—	22,5	33	M6x20	14
28	38	90	35	20	15	2,5	65	—	73	—	25,5	39	M8x25	35
38	45	114	45	24	18	3,0	80	—	83,5	—	35,5	43	M8x30	35
42	50	126	50	26	20	3,0	95	85	—	93,5	39	48	M10x30	69
	55							—	97	—			M10x35	
48	55	140	56	28	21	3,5	105	95	—	105	45	50	M12x35	120
	60							—	108,5	—			M12x40	
55	65	160	65	30	22	4,0	120	110	—	119,5	50	60	M12x40	120
	70							—	122	—			M12x45	
65	70	185	75	35	26	4,5	135	115	—	123,5	60	65	M12x40	120
	80							—	132,5	—			M12x45	
75	80	210	85	40	30	5,0	160	135	—	147,5	67,5	75	M16x50	295
	90							—	158	—				
90	90	245	100	45	34	5,5	200	160	—	176	81,5	82	M20x60	580
	110							—	197	—				
100[1)]	110	270	110	50	38	6,0	225	180	—	185,5	84	102	M16x50	295
110[1)]	120	295	120	55	42	6,5	255	200	—	208	90	115	M20x60	580
125[1)]	140	340	140	60	46	7,0	290	230	—	242,5	105	130	M24x70	1000

Please note:
With maximum bore the feather keyways are offset to each other by approx. 5°!
Hub material up to size 90: steel, from size 100: GJS

7.8= Shell clamping hub without feather key With 25 m/sec. dynamic balancing is required
Applying for 7.8 only: from a circumferential speed of 25 m/sec. the frictional torque of shaft / hub has to be reviewed. Please consult with KTR engineering department.
7.9= Shell clamping hub with feather key max. circumferential speed of 35 m/sec. From a circumferential speed of 25 m/sec. dynamic balancing is required.

Speed: max. circumferential speed of 25 m/sec. on the outside diameter D_H of the coupling
[1)] From size 100: 4 clamping screws for each clamping hub.

Ordering example:

ROTEX® 38	A-H	98 Sh-A	7.8	Ø 38	7.8	Ø30
Coupling size	Type	Spider hardness	Hub type	Finish bore	Hub type	Finish bore

Drop-out center design coupling with SPLIT hubs

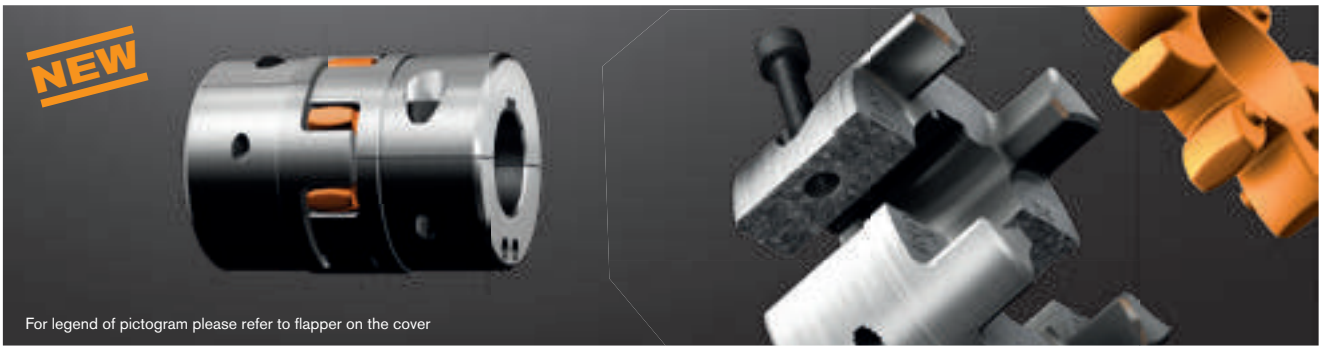

Components

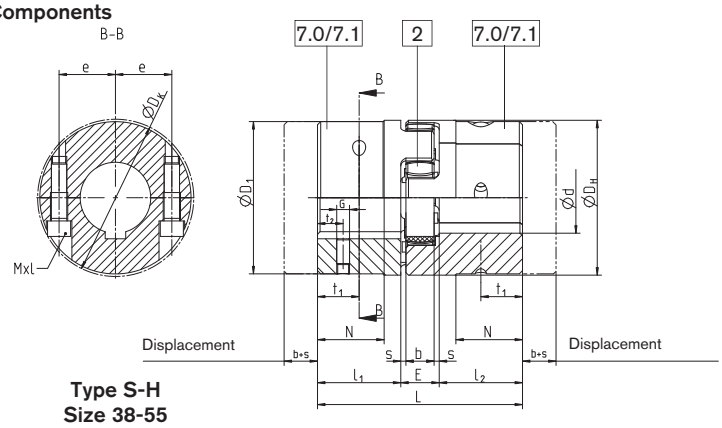

Type S-H
Size 38-55

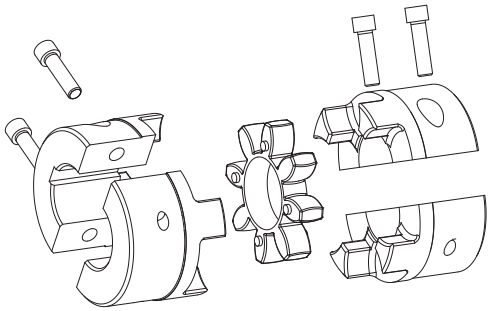

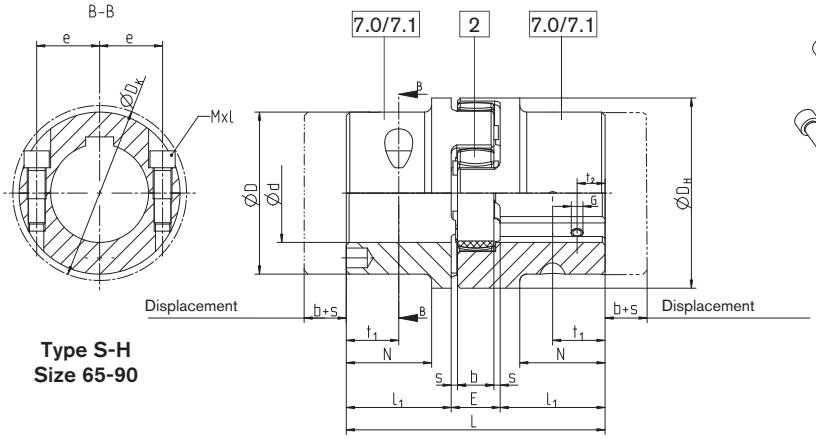

Type S-H
Size 65-90

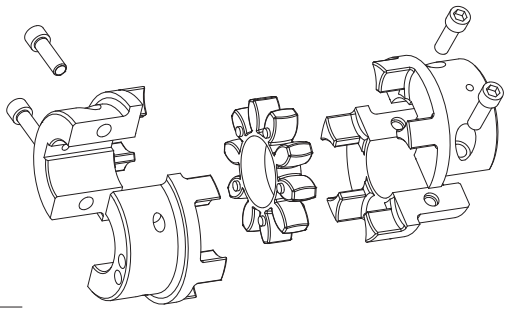

ROTEX® Type S-H

Size	Finish bore Ød [mm]		Dimensions [mm]													Cap screws DIN EN ISO 4762	
	minimum	maximum	L	l_1; l_2	E	b	s	D_H	D_1	D_K	N	e	t_1	t_2	G	Mxl	Tightening torque T_A [Nm]
38	24	45	114	45	24	18	3	80	78	83,5	37	30	22,5	15		M8x30	34
42	24	55	126	50	26	20	3	95	94	97	40	30	25		M8	M10x30	67
48	24	60	140	56	28	21	3,5	105	104	108,5	45	35	28			M12x35	115
55	24	70	160	65	30	22	4	120	118	122	52	40	32,5	20		M12x40	115
65	24	70	185	75	35	26	4,5	135	115	123,5	61	45	37,5				115
	70	80							135	132,5		50			M10	M12x45	
75	40	80	210	85	40	30	5	160	135	147	69	51	42,5	25		M16x50	290
	80	90							160	158		57					
90	40	90	245	100	45	34	5,5	200	160	176	81	60	50	30	M12	M20x60	560
	90	110							200	197		72					

7.0= SPLIT hub without feather keyway
7.1= SPLIT hub with feather keyway

Ordering example:

ROTEX® 38	S-H	98 Sh-A	7.1	Ø 38	7.1	Ø30
Coupling size	Type	Spider hardness	Hub type	Finish bore	Hub type	Finish bore

Single-cardanic shaft coupling (Non Sparking)

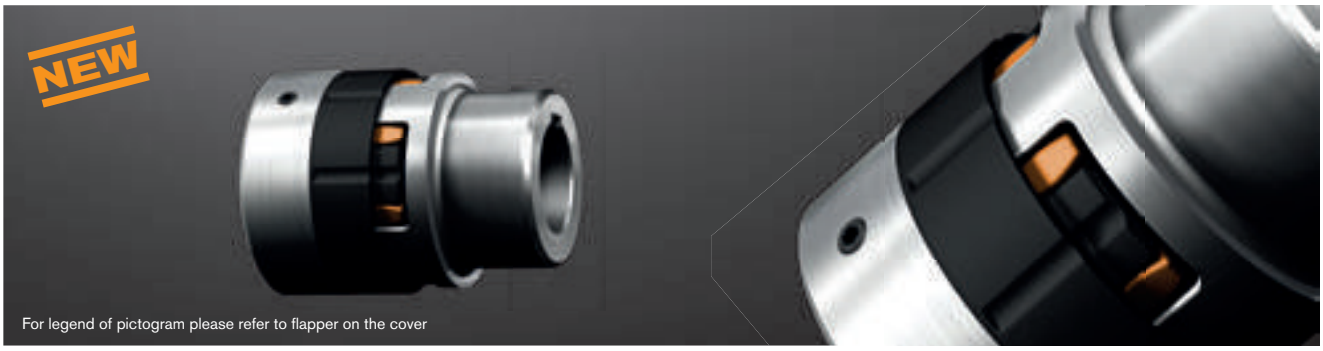

Components

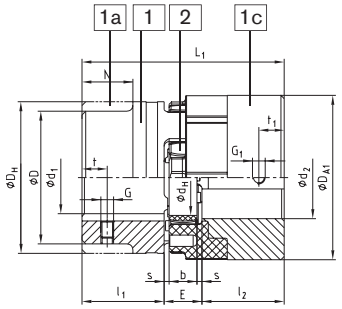

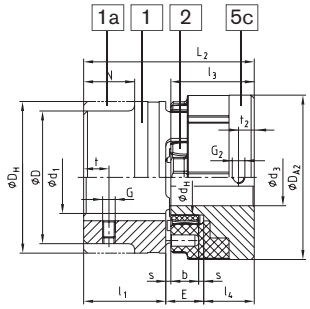

ROTEX® Standard (St) [3]			ROTEX® SP Type GN (No. 080)							ROTEX® SP Type EN (No. 081)							
Size	Spider (part 2) [1] Rated torque [Nm]	Component steel (St)	Component SP	Dimensions [mm] ROTEX® SP component 1c						Component SP	Dimensions [mm] ROTEX® SP component 5c						
				maximum d_2 [2]	l_2	D_{A1}	G_1	t_1	L_1		maximum d_2 [2]	l_3	l_4	D_{A2}	G_2	t_2	L_2
24	35	1a	1c	28	30	61	M5	10	78	5c	19	36	22	61	M5	6	70
		1b							98								90
28	95	1a	1c	32	35	72	M8	15	90	5c	22	42	26	72	M8	7	81
		1b							115								106
38	190	1	1c	42	45	87	M8	15	114	5c	28	50	30	87	M8	7	99
		1b							139								124
42	265	1	1c	48	50	103	M8	20	126	5c	35	56	34	103	M8	10	110
		1b							151								135
48	310	1	1c	55	56	114	M8	20	140	5c	40	60	36	114	M8	10	120
		1b							164								124
55	410	1	1c	65	65	130	M10	20	160	5c	45	66	40	130	M10	17	135
		1b							185								160
65	625	1	1c	75	75	146	M10	20	185	5c	55	75	44	146	M10	17	154
		1b							210								179

ROTEX® Standard (GJL) [4]			ROTEX® SP Type GN (No. 080)							ROTEX® SP Type EN (No. 081)							
Size	Spider (part 2) [1] Rated torque [Nm]	Component cast iron (GJL)	Component (SP)	Dimensions [mm] ROTEX® SP component 1c						Component SP	Dimensions [mm] ROTEX® SP component 5c						
				maximum d_2 [2]	l_2	D_A	G	t	L		maximum d_2 [2]	l_2	l_3	D_A	G	t_1	L_1
38	190	1	1c	42	45	87	M8	15	114	5c	28	50	30	87	M8	7	99
		1a															
		1b							139								124
42	265	1	1c	48	50	103	M8	20	126	5c	35	56	34	103	M8	10	110
		1a															
		1b							151								135
48	310	1	1c	55	56	114	M8	20	140	5c	40	60	36	114	M8	10	120
		1a															
		1b							164								144
55	410	1	1c	65	65	130	M10	20	160	5c	45	66	40	130	M10	17	135
		1a															
65	625	1	1c	75	75	146	M10	20	185	5c	55	75	44	146	M10	17	154

[1] Maximum torque of coupling TKmax. = rated torque of coupling TK rated x 2. Transmittable torque acc. to 92 Sh-A
[2] Bore H7 with keyway to DIN 6885 sheet 1 [JS9] and thread for setscrews
[3] 3) For dimensions of standard ROTEX® hubs (St) 1, 1a, 1b see catalogue on page 36.
[4] 4) For dimensions of standard ROTEX®hubs (GJL) 1, 1a, 1b see catalogue on page 34.
= Available from stock

Ordering example:

ROTEX® SP 38	GJL	92 Sh-A	1a	Ø45	1c	Ø42
Coupling size	Material of component 1;1a;1b	Spider hardness	Component	Finish bore	Component	Finish bore

Double-cardanic shaft coupling (Non Sparking)

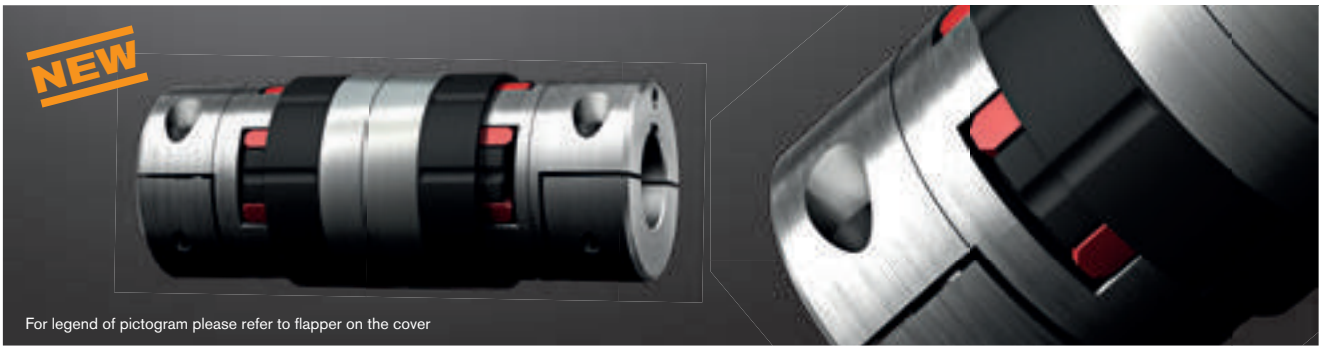

Components

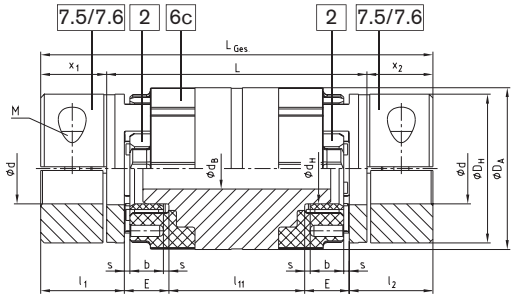

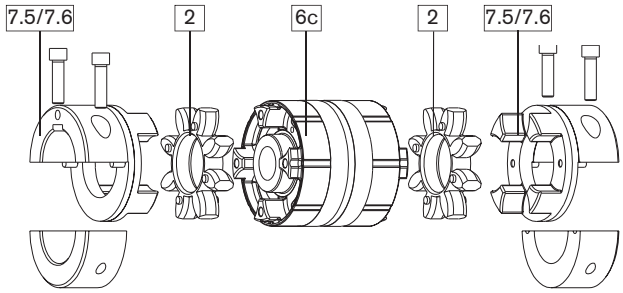

ROTEX® SP Type ZS-DKM-C (No. 085)																
Size	Drop-out center length L	Spider (part 2) 1) Rated torque [Nm]	Dimensions [mm] General component 7.5/7.6 steel												Dimensions [mm] ROTEX® SP comp. 6c Al-H3)	
			Maximum finish bore 2) d	LGes.	l1; l2	x1; x2	E	b	s	DH	DA	dH	M	TA [Nm]	dB	l11
24	100	35	28	145	30	22,5	18	14	2,0	55	61	27	M6	14	14	49
	140			185												89
28	100	95	38	151	35	25,5	20	15	2,5	65	72	30	M8	35	16	41
	140			191												81
38	100	190	45	171	45	35,5	24	18	3,0	80	87	38	M8	35	22	33
	140			211												73
42	100	265	55	178	50	39	26	20	3,0	95	103	46	M10	69	30	26
	140			218												66
48	140	310	60	230	56	45	28	21	3,5	105	114	51	M12	120	35	62
55	140	410	70	240	65	50	30	22	4,0	120	130	60	M12	120	35	50
	180			280												90
	200			300												110
65	140	625	80	260	75	60	35	26	4,5	135	146	68	M12	120	48	40
	180			300												50

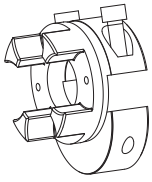

Type 7.5 clamping hub type DH without feather keyway for double-cardanic connection

Type 7.6 clamping hub type DH with feather keyway for double-cardanic connection

1) Maximum torque of coupling TKmax. = rated torque of coupling TK rated x 2. Transmittable torque acc. to 92 Sh-A-GS
2) Hub type 7.5= without keyway; hub type 7.6=with keyway to DIN 6685 sheet 1 (JS9)
3) Size 42 with drop-out center length 100 made of steel
■ = Available from stock

Ordering example:

ROTEX® SP 38	ZS-DKM-C	140	98 Sh-A-GS	7.5	Ø38	7.5	Ø30
Coupling size	Type	Drop-out center length L	Spider hardness	Hub type	Finish bore	Hub type	Finish bore

ROTEX® ZS-DKM-H
Flexible jaw couplings

Double-cardanic shaft coupling



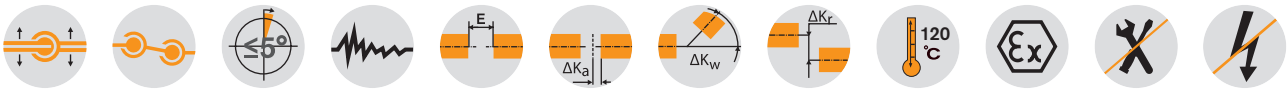

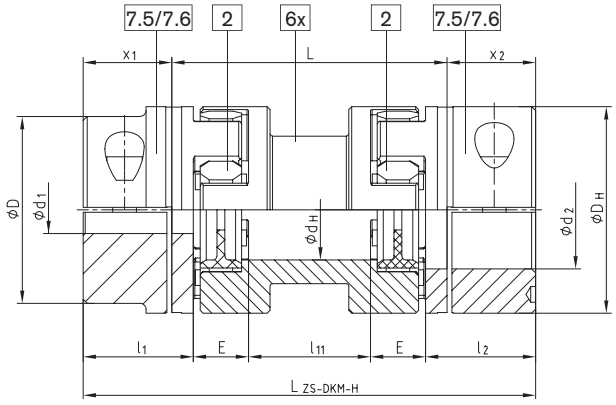

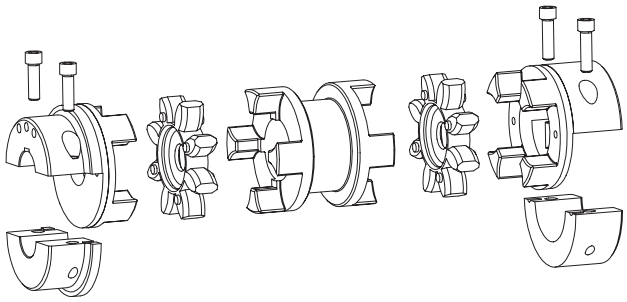

Type ZS-DKM-H

ROTEX® Type ZS-DKM-H

Size	Drop-out center length L [mm]	Max. finish bore Ød1/d2 [mm]	Spider (part 2) 1) TKN [Nm]	Dimensions [mm]							Cap screws DIN EN ISO 4762 – 12.9		Max. displacements					Weight2) [kg]
													Axial [mm]	with n = 1500 rpm		with n = 3000 rpm		
				D_H	d_H	l_1; l_2	x_1; x_2	l_{11}	E	$L_{ZS-DKM-H}$	M	TA [Nm]		Radial [mm]	Angular [°]	Radial [mm]	Angular [°]	
24	100	28	35	55	27	30	22,5	49	18	145	M6	14	1,4	1,17		0,87		1,40
	140							89		185				1,87		1,40		1,60
28	100	38	95	65	30	35	25,5	41	20	151	M8	35	1,5	1,06		0,80		1,90
	140							81		191				1,76		1,32		2,20
38	100	45	190	80	38	45	35,5	33	24	171	M8	35	1,8	0,99		0,74		3,90
	140							73		211				1,69		1,27		4,10
42	100	55	265	95	46	50	39,0	26	26	178	M10	69	2,0	0,91		0,68		5,10
	140							66		218				1,60		1,20		5,70
48	100	60	310	105	51	56	45,0	22	28	190	M12	120	2,1	0,87		0,65		7,10
	140							62		230				1,57		1,18		7,90
55	100	70	410	120	60	65	50,0	10	30	200	M12	120	2,2	0,70	1,0	0,52	0,75	9,50
	140							50		240				1,40		1,05		11,20
	180							90		280				2,09		1,57		12,30
	200							110		300				2,44		1,83		12,80
65	140	80	625	135	68	75	60,0	40	35	260	M12	120	2,6	1,31		0,98		16,10
	180							80		300				2,00		1,50		16,80
75	140	90	1280	160	80	85	67,5	25	40	275	M16	295	3,0	1,13		0,85		23,60
	180							65		315				1,83		1,37		26,00
	200							85		335				2,19		1,64		27,00
	250							135		385				3,05		2,29		29,50
90	180	110	2400	200	100	100	81,5	53	45	343	M20	580	3,4	1,71		1,28		48,90
	250							123		413				2,93		2,19		52,60

[1] Maximum torque of coupling $T_{Kmax.}$ = rated torque of coupling T_{KN} x 2
Size 24 to 90 spider type 98 Sh-A-GS
ZS-DKM-H: transmittable torque according to 92 Sh-A-GS
[2] Referring to max. bore
Finish bore according to ISO fit H7, feather keyway according to DIN 6885 sheet 1 - JS9

7.5= Shell clamping hub without feather key for a double-cardanic connection
7.6= Shell clamping hub with feather key for a double-cardanic connection
ATTENTION: The standard line is only applicable for horizontal assembly. Vertical assembly on request.

Ordering example:

ROTEX® 38	ZS-DKM-H	140	98 Sh-A-GS	7.5	Ø 38	7.5	Ø30
Coupling size	Type	Shaft distance dimension L	Spider hard-ness	Hub type	Finish bore	Hub type	Finish bore

Double-cardanic shaft coupling

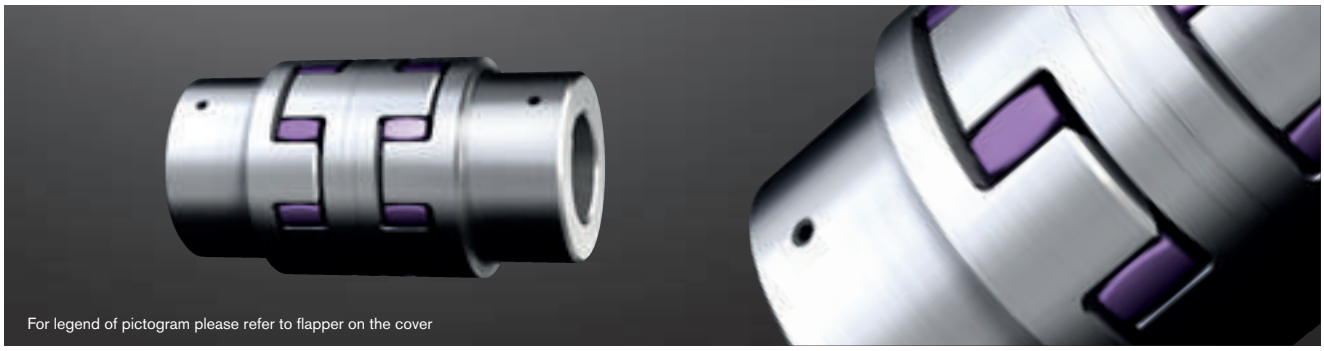

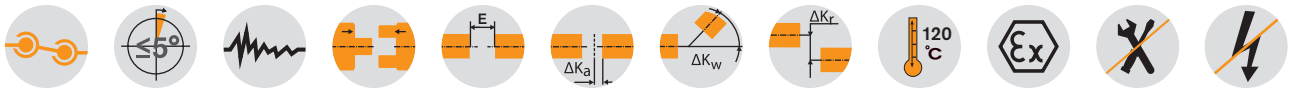

Components

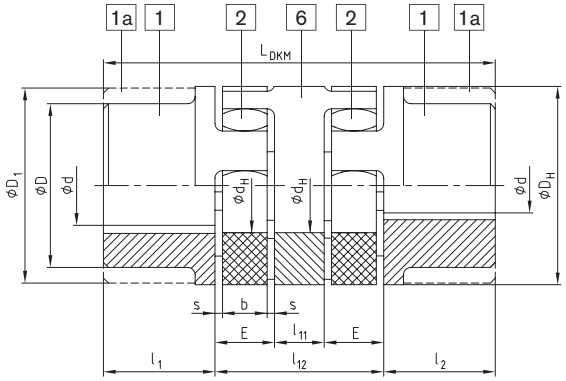

Type DKM

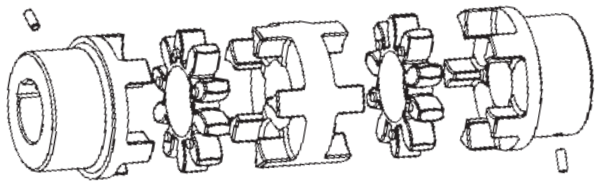

ROTEX® Type DKM															
Größe	Ød, ØD, ØD1	Spider (part 2) Rated torque [Nm] 1		Dimensions [mm]									Max. displacement with n = 1500 rpm		
		92 Sh-A	98 Sh-A	D_H	d_H	$l_1; l_2$	l_{11}	l_{12}	E	s	b	L_{DKM}	Radial [mm]	Angular [°]	Axial [mm]
19	See jaw couplings on page 34 to 39 Stock programme/basic programme on page 32 and 33	10	17	40	18	25	10	42	16	2,0	12	92	0,45	1,0	+1,2/-1,0
24		35	60	55	27	30	16	52	18	2,0	14	112	0,59	1,0	+1,4/-1,0
28		95	160	65	30	35	18	58	20	2,5	15	128	0,66	1,0	+1,5/-1,4
38		190	325	80	38	45	20	68	24	3,0	18	158	0,77	1,0	+1,8/-1,4
42		265	450	95	46	50	22	74	26	3,0	20	174	0,84	1,0	+2,0/-2,0
48		310	525	105	51	56	24	80	28	3,5	21	192	0,91	1,0	+2,1/-2,0
55		410	685	120	60	65	28	88	30	4,0	22	218	1,01	1,0	+2,2/-2,0
65		625	940	135	68	75	32	102	35	4,5	26	252	1,17	1,0	+2,6/-2,0
75		1280	1920	160	80	85	36	116	40	5,0	30	286	1,33	1,0	+3,0/-3,0
90		2400	3600	200	100	100	40	130	45	5,5	34	330	1,48	1,0	+3,4/-3,0

[1] For selection please see page 10 et seqq.
Finish bore according to ISO fit H7, feather keyway according to DIN 6885 sheet 1 - JS9

Ordering example:

ROTEX® 38	DKM	GJL	98 Sh-A	1	Ø 38	1	Ø30
Coupling size	Type	Material	Spider hardness	Component	Finish bore	Component	Finish bore

ROTEX® CF, CFN, DF and DFN
Flexible jaw couplings

Flange programme

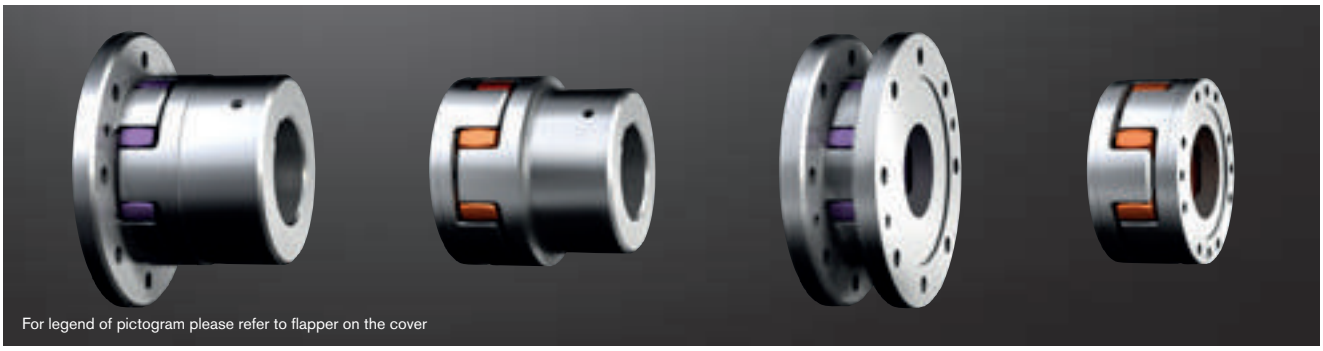

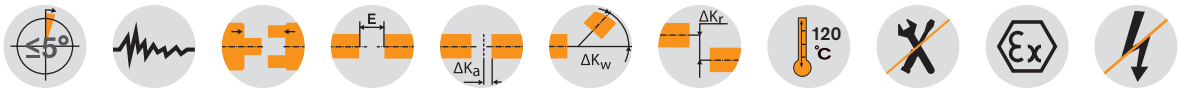

Components

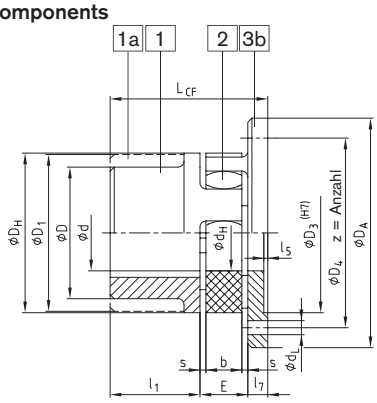

Type CF

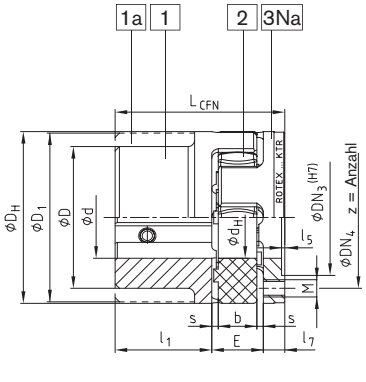

Type CFN

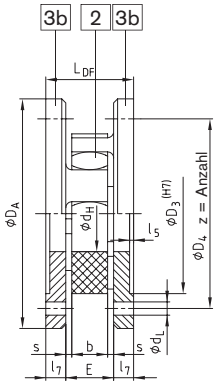

Type DF

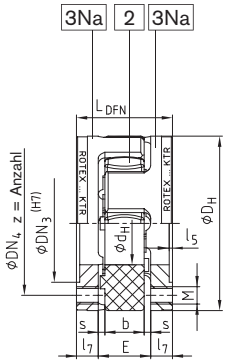

Type DFN

ROTEX® Type CF, CFN (No. 005) and DF, DFN (No. 006)																							
Size	d, ØD, ØD1	General dimension								Dimensions CF and DF							Dimensions CFN and DFN						
		D_H	d_H	l_1	E	s	b	l_5	l_7	D_A	D_3	D_4	z	d_L	L_{CF}	L_{DF}	D_{N3}	D_{N4}	M	z	Pitch	L_{CFN}	L_{DFN}
24	See shaft coupling on page 34 to 36 and Stock programme/basic programme on page 32 and 33	55	27	30	18	2,0	14	1,5	8	80	55	65	5	4,5	56	34	36	45	M5	8		56	34
28		65	30	35	20	2,5	15	1,5	10	100	65	80	6	6,6	65	40	44	54	M6	8	8x45°	65	40
38		80	38	45	24	3,0	18	1,5	10	115	80	95	6	6,6	79	44	54	66	M8	8		79	44
42		95	46	50	26	3,0	20	2,0	12	140	95	115	6	9,0	88	50	65	80	M8	12	16x22,5°	88	50
48		105	51	56	28	3,5	21	2,0	12	150	105	125	8	9,0	96	52	75	90	M8	12		96	52
55		120	60	65	30	4,0	22	2,0	16	175	120	145	8	11,0	111	62	84	102	M10	8	8x45°	111	62
65		135	68	75	35	4,5	26	2,0	16	190	135	160	10	11,0	126	67	96	116	M10	12	16x22,5°	126	67
75		160	80	85	40	5,0	30	2,5	19	215	160	185	10	13,5	144	78	112	136	M12	15		144	78
90		200	100	100	45	5,5	34	3,0	20	260	200	225	12	13,5	165	85	145	172	M16	15		165	85
100		225	113	110	50	6,0	38	4,0	25	285	225	250	12	13,5	185	100	165	195	M16	15		185	100
110		255	127	120	55	6,5	42	4,0	26	330	255	290	12	18,0	201	107	180	218	M20	15	20x18°	201	107
125		290	147	140	60	7,0	46	5,0	30	370	290	325	16	18,0	230	120	215	252	M20	15		230	120
140		320	165	155	65	7,5	50	5,0	34	410	320	360	16	22,0	254	133	245	282	M20	15		254	133
160		370	190	175	75	9,0	57	5,0	38	460	370	410	16	22,0	288	151	280	325	M24	15		288	151
180		420	220	195	85	10,5	64	5,5	40	520	420	465	16	26,0	320	165	330	375	M24	18	24x15°	320	165

For other flange programmes see page 43.

Other types: ROTEX® CF-H
Flange drop-out center design coupling
Please order our separate dimension sheet (M412069)



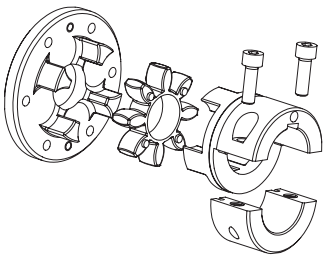

Ordering example:	ROTEX® 38	CF	92 Sh-A	1	GJL	Ø20
	Coupling size	Type	Spider hardness	Hub side Component	Material	Finish bore

Intermediate shaft programme



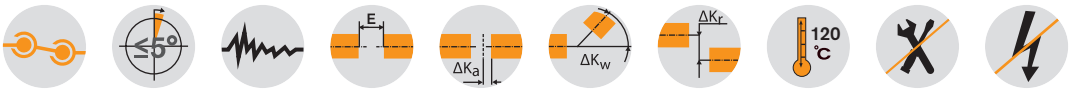

Components

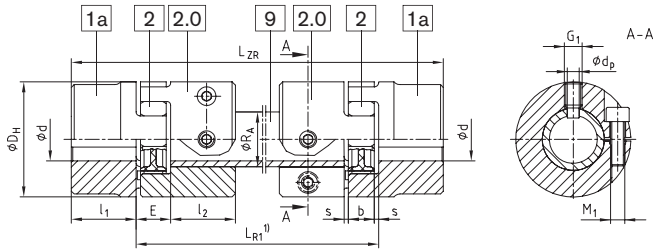

Type ZR
(with GS spider)

Type ZR
(with GS spider and clamping hubs type DH for a double-cardanic connection 7.5 or 7.6)

ROTEX® Type ZR

Size	Finish bore Ød		Dimensions [mm]						Intermediate pipe Torsional stiffness/m		Clamping screw Part 2.0		Clamping screw Component 7.5/7.6		LZR; LZH	min. LR1	min. LR2	Locking screw G1	Cone bore dp [mm]	Axial displacement [mm]	Angular displacement [degrees]
	Part 1a	Part 7.5/7.6	D_H	$l_1; l_2$	$x_1; x_2$	E	s	b	R_A	$C^{2)}$ [Nm²/rad]	M_1	T_A [Nm]	M_2	T_A [Nm]							
19	25	20	40	25	17,5	16	2,0	12	Ø20x3	954,9	M6	14	M6	10		110	97	M6	4,0	1,2	0,9
24	35	28	55	30	22,5	18	2,0	14	Ø30x4	4522	M6	14	M6	14		128	111	M8	5,5	1,4	0,9
28	40	38	65	35	25,5	20	2,5	15	Ø35x4	7611	M8	35	M8	35		145	129	M10	7,0	1,5	0,9
38	48	45	80	45	35,5	24	3,0	18	Ø40x4	11870	M8	25	M8	35	$L_{R1} + 2 \bullet l_1$	180	157	M12	8,5	1,8	1,0
42	55	55	95	50	39,0	26	3,0	20	Ø45x4	17487	M10	49	M10	69	$L_{R2} + 2 \bullet x_1/x_2$	198	174	M12	8,5	2,0	1,0
48	62	60	105	56	45,0	28	3,5	21	Ø50x4	24648	M12	86	M12	120		217	190	M16	12	2,1	1,1
55	74	70	120	65	50,0	30	4,0	22	Ø55x4	33544	M12	120	M12	120		242	220	M16	12	2,2	1,1
65	80	80	135	75	60,0	35	4,5	26	Ø65x5	68329	M12	120	M12	120		281	250	M16	12	2,6	1,2
75	95	90	160	85	67,5	40	4,0	30	Ø75x5	108000	M16	295	M16	295		318	285	M16	12	3,0	1,2

[1)] For inquiries and orders please mention the shaft distance dimension LR1/LR2 along with the maximum speed to review the critical bending speed.
[2)] Torsion spring stiffness with a length of 1 m of intermediate pipe
Finish bore acc. to ISO fit H7, feather keyway acc. to DIN 6885 sheet 1 - JS9
Friction torques of clamping hubs have to be taken into account. Please order dimension sheet No. 583613.

Not permissible for crane and hoisting gear drives

Diagramme for coupling selection:

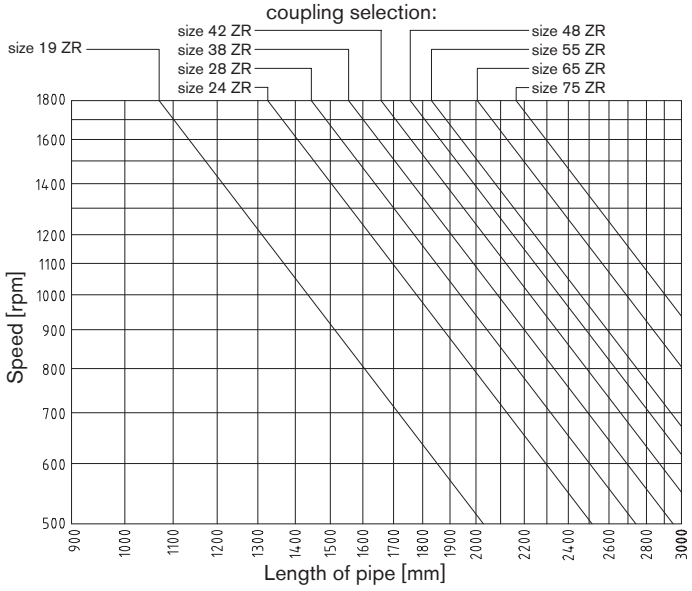

Ordering example:

ROTEX® 38	ZR	1200	98 Sh-A-GS	7.5	Ø 38	7.5	Ø30
Coupling size	Type	Shaft distance dim. L_{R1}/L_{R2}	Spider hardness	Hub type	Finish bore	Hub type	Finish bore

ROTEX® BTAN and SBAN
Flexible jaw couplings

With brake drum / with brake disk

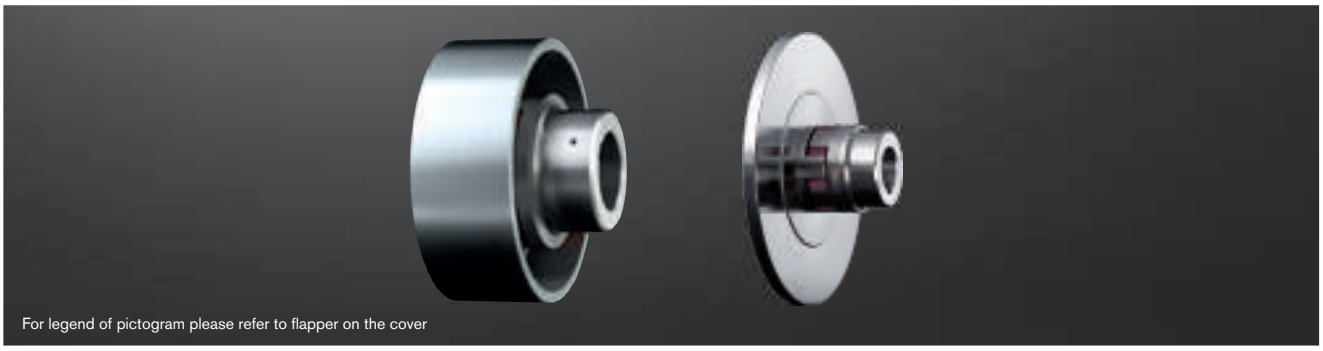

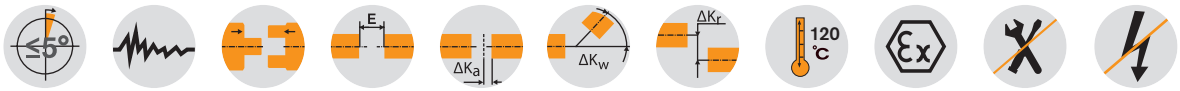

ROTEX® Type BTAN (No. 011) and SBAN (No. 013)

Size	Pilot bore Ød; ØD ØD1	Finish bore max.d1		Dimensions [mm]										
		GJS	Steel	D_H	D_2	D_4	d_H	z	Pitch 1)	M	TA [Nm]	l_1; l_2	E	L
38	See jaw couplings on page 34 to 60 Stock programme/basic programme on page 32 and 33	—	34	80	50	66	38	8	8 x 45°	M8	41	45	24	114
42		—	42	95	60	80	46	12	16 x 22,5°	M8	41	50	26	126
48		—	48	105	68	90	51	12		M8	41	56	28	140
55		—	55	120	78	102	60	8	8 x 45°	M10	83	65	30	160
65		—	65	135	92	116	68	12	16 x 22,5°	M10	83	75	35	185
75		—	75	160	106	136	80	15		M12	120	85	40	210
90		—	100	200	140	172	100	15		M16	295	100	45	245
100		100	—	225	156	195	113	15	20 x 18°	M16	295	110	50	270
110		110	—	255	176	218	127	15		M20	580	120	55	295
125		130	—	290	204	252	147	15		M20	580	140	60	340

Type BTAN												Type SBAN											
Brake drum	ROTEX® BTAN dimension „C“										Speed rpm [V] (30 m/s)	Brake disk	ROTEX® SBAN dimension “N”										Speed rpm [V] (30 m/s)
	38	42	48	55	65	75	90	100	110	125			38	42	48	55	65	75	90	100	110	125	
160x60	14										3550	200x12,5	31,25										2800
200x75	9	12	17	24							2800	250x12,5	31,25	34,25	39,25								2240
250x95	1	4	9	16	25	33					2240	315x16		32,5	37,5	44,5	53,5	61,5					1800
315x118		-5	0	7	16	24	36				1800	400x16			37,5	44,5	53,5	61,5	73,5	81,5	88,5		1400
400x150		-18	-13	-6	3	11	23	31	38		1400	500x16				44,5	53,5	61,5	73,5	81,5	88,5	104,5	1120
500x190					-12	-4	8	16	23	39	1120	630x20					51,5	59,5	71,5	79,5	86,5	102,5	900
630x236						-22	-10	-2	5	21	900	710x20					51,5	59,5	71,5	79,5	86,5	102,5	800
710x265								-13	-6	10	800	800x25							69	77	84	100	710
800x300										-4	710	900x25									84	100	630

[1] Thread in the hub between the cams
Other sizes on request according to dimension sheet No.:
BTAN:M 380821
SBAN straight: M380822; cranked: M 370065
FNN hub: M 380823
Finish bore according to ISO fit H7, feather keyway acc. to DIN 6885 sheet 1 - JS9

Ordering example:

ROTEX® 38	BTAN	Ø200x75	98 Sh-A	1Nd	Ø 38	1	Ø30
Coupling size	Type	Ø brake drum x width	Spider hardness	Component	Finish bore	Component	Finish bore

Components

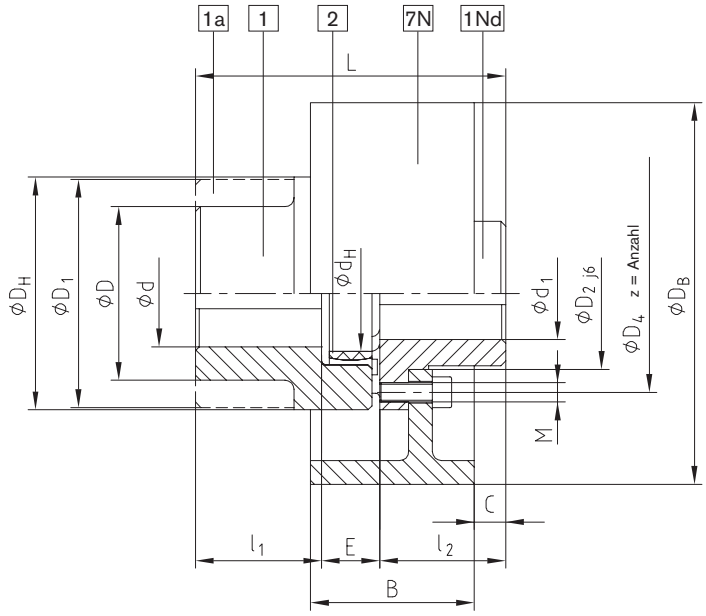

Brake drum
type BTAN

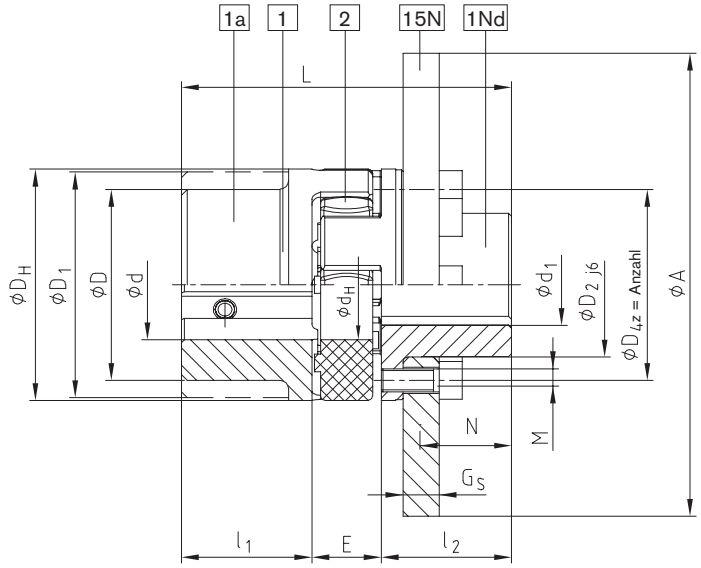

Brake disk
type SBAN

ROTEX® AFN-SB special
Flexible jaw couplings

Drop-out center design coupling with brake disk



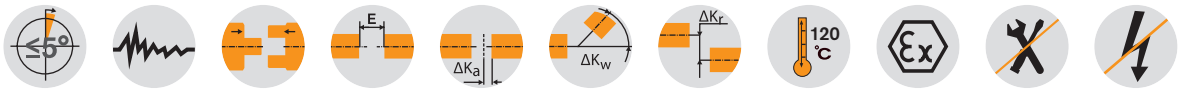

Components

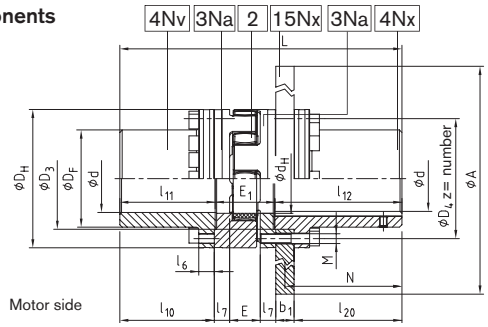

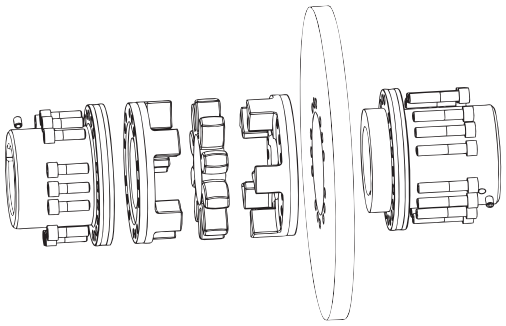

ROTEX® Type AFN-SB special													
Size	Finish bore d		Dimensions [mm]										
	Min.	max	D_H	D_F	D_3 H7/h7	D_4	d_H	E	E_1	M	z	Pitch	TA [Nm]
65	22	65	135	94	96	116	68	35	65	M10	12	16x22,5°	83
75	30	75	160	108	112	136	80	40	75	M12	15		120
90	40	100	200	142	145	172	100	45	82	M16	15		295
100	46	110	225	158	165	195	113	50	97	M16	15		295
110	60	125	255	178	180	218	127	55	103	M20	15	20x18°	580
125	60	145	290	206	215	252	147	60	116	M20	15		580
140	60	165	320	235	245	282	165	65	128	M20	15		580
160	80	190	370	270	280	325	190	75	146	M24	15		1000
180	85	220	420	315	330	375	220	85	159	M24	18	24x15°	1000

ROTEX® Type AFN-SB special											
Size	Torque with 98Sh-A [1]		Max. speed [rpm]	Max.braking torque [Nm]2)	Dimensions [mm]						
	T_{KN}	T_{Kmax}			l_7	l_{10}	l_{11}	l_{12}	l_{20}	N	L
65	940	1880	3450	1880	16	112,5	113,5	166,0	135	150	344,5
75	1920	3840	3250	3840	19	131,5	133,0	166,5	135	150	374,5
90	3600	7200	3000	7200	20	164,0	165,5	206,5	175	190	454,0
100	4950	9900	2800	9900	25	153,5	155,0	206,5	175	190	458,5
110	7200	14400	2600	14400	26	201,5	203,5	212,0	180	195	518,5
125	10000	20000	2250	20000	30	198,5	200,5	212,0	180	195	528,5
140	12800	25600	1800	25600	34	244,5	247,0	252,5	220	235	627,5
									210 [3]	230 [3]	
160	19200	38400	1500	38400	38	226,5	229,0	252,5	220	235	627,5
									210 [3]	230 [3]	
180	28000	56000	1350	56000	40	195,0	198,0	252,5	220	235	609,5

ROTEX® Selection of coupling/brake disk											
Size	Brake disk ØA x b1										
	355x30	400x30	450x30	500x30	560x30	630x30	710x30	800x30	900x30	900x40	1000x40
65	x	x	x								
75		x	x	x							
90			x	x	x	x					
100				x	x	x					
110				x	x	x	x				
125						x	x	x			
140							x	x	x	x	x
160							x	x	x	x	x
180							x	x	x	x	x

[1] For selection see page 10 et seqq. [2] The maximum braking torque must not exceed the maximum torque of the coupling. [3] Dimensions for a brake disk width b1 of 40 mm.

Ordering example:

ROTEX® 90	AFN-SB special	Ø450x30	98 Sh-A	4Nv	Ø90	4Nx	Ø90
Coupling size	Type	ØBrake disk, x width	Spider hard-ness	Component	Finish bore	Component	Finish bore

Shiftable coupling shiftable at standstill

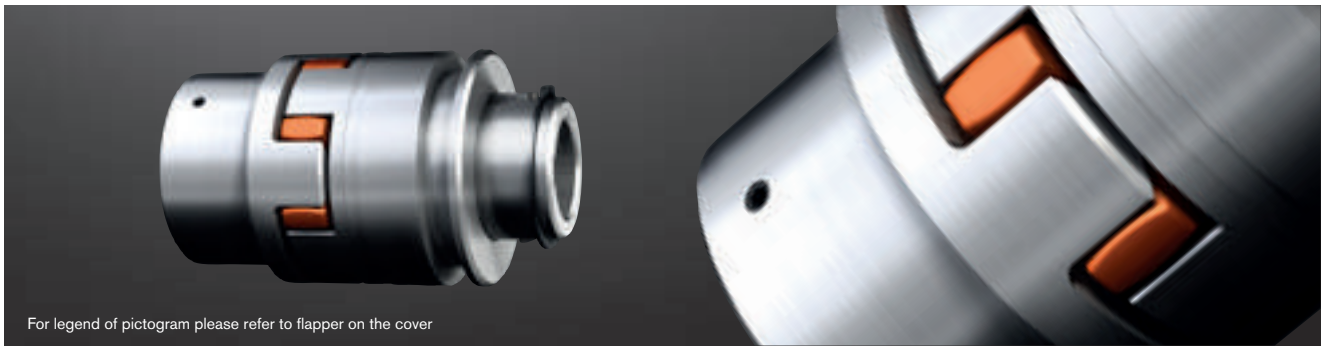

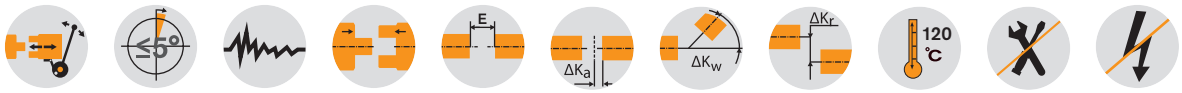

Components

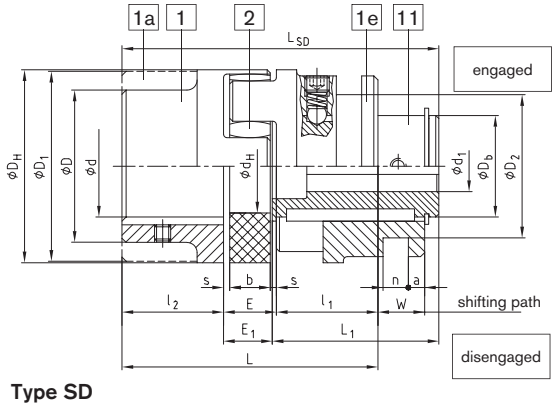

Type SD

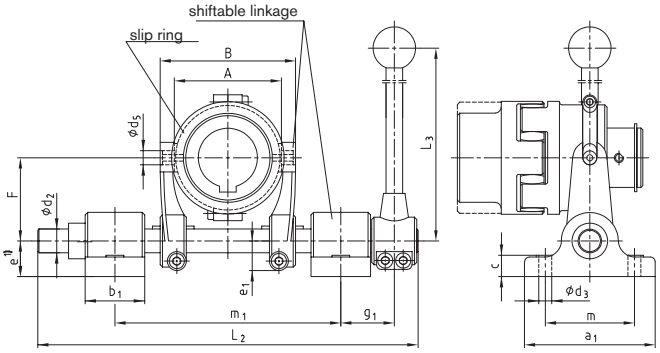

Type SD with slip ring and shiftable linkage

ROTEX® Type SD

Size	Ød, ØD, ØD1	Finish bore d1		Dimensions [mm]																Shifting force set in [N]	Slip ring size	Shiftable linkage size
		Min.	max.	D_H	D_2±0,1	Db	d_H	l_1;l_2	E	s	b	E_1	L	L_1	W	a	n±0,1	L_{SD}			
24	See jaw couplings on page 34 to 39 Stock programme/basic progr. see page 32 and 33	8	18	55	41	30	27	30	18	2,0	14	16,5	78	51,5	16,0	6	6,0	98	110	—	—
28		10	22	65	58	36	30	35	20	2,5	15	18,0	90	60,0	17,5	8	8,0	113	130	—	—
38		12	28	80	70,5	45	38	45	24	3,0	18	22,0	114	73,0	21,0	8	12,5	140	150	1.1	1
42		14	32	95	70,5	50	46	50	26	3,0	20	24,0	126	82,0	23,0	8	12,5	156	180	1.1	1
48		15	40	105	89,5	60	51	56	28	3,5	21	25,5	140	90,5	24,5	6	17,5	172	200	2.2	2
55		18	48	120	112,5	70	60	65	30	4,0	22	27,0	160	103,0	26,0	6	18,0	195	250	3.3	3
65		20	55	135	112,5	80	68	75	35	4,5	26	32,0	185	120,0	30,5	7	18,0	227	280	3.3	3
75		25	65	160	130,5	95	80	85	40	5,0	30	37,0	210	135,0	35,0	6	20,5	257	350	4.4	3
90		28	75	200	164,5	110	100	100	45	5,5	34	41,0	245	152,0	39,5	8	25,5	293	350	5.5	4
100		30	80	225	164,5	115	113	110	50	6,0	38	46,0	270	169,0	44,0	14	25,5	325	380	5.5	4
110		35	85	255	164,5	125	127	120	55	6,5	42	51,5	295	184,0	48,5	18,5	25,5	355	450	5.5	4
125		40	100	290	210,5	145	147	140	60	7,0	46	55,5	340	208,5	53,0	18,5	30,5	404	500	6.6	5

Slip ring and shiftable linkage

Size	Size of shiftable linkage	Dimensions [mm]																	Max. speed [rpm] for slip ring
		a_1	b_1	c	d_2	d_3	d_5	$e^{1)}$	e_1	F	g_1	L_2	L_3	m	m_1 Min.	m_1 max.	A	B	
38	1	110	50	18	20	11	12	30	25	70	55	320	400	75	180	190	90	114	3280
42	1																		
48	2	140	60	25	25	13,5	17	40	27	97,5	60	430	450	100	240	270	111	151	2550
55	3				30				32,5	120	70	490	600		280	310	140	180	2120
65	3																		
75	3																170	210	1710
90	4	160			35		21	50	37,5	147,5	70	565	750	120	321	365	200	244	1360
100	4																		
110	4																		
125	5				40		25		46	190	80	630	1085		365	410	250	300	855

[1)] With a through base plate the dimension „e“ of the shiftable linkage size 5 has to be increased by at least 10 mm.
Finish bore according to ISO fit H7, feather keyway acc. to DIN 6885 sheet 1 - JS9

Ordering example:

ROTEX® 38	SD	With 1.1 and 1	98 Sh-A	1	Ø38	11	Ø28
Coupling size	Type	with slip ring 1.1 and shifting linkage 1	Spider hardness	Component	Finish bore	Component	Finish bore

ROTEX® FNN
Flexible jaw couplings

For mounting of fan

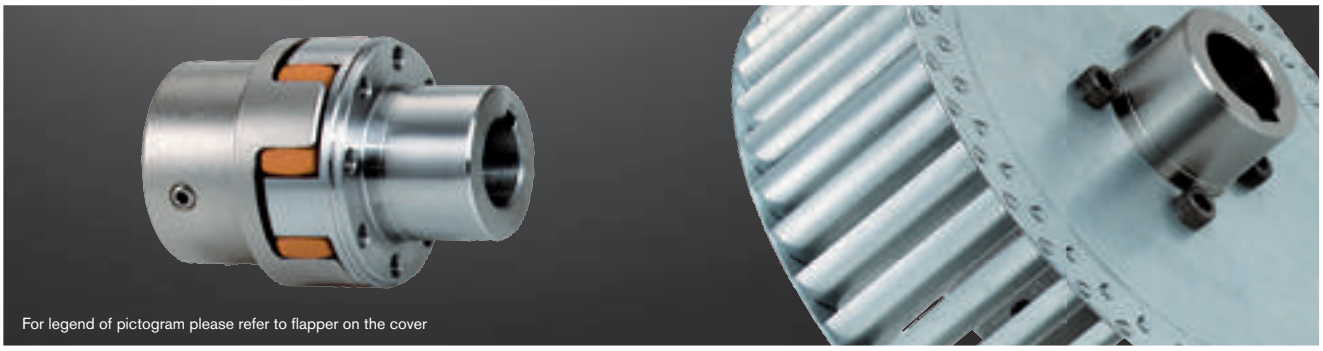

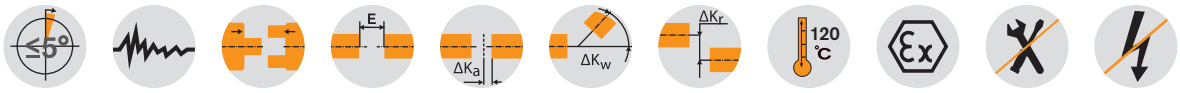

Components

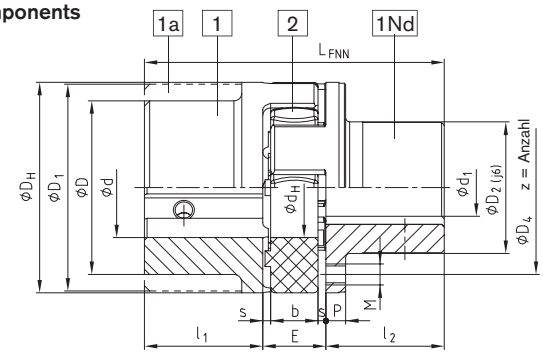

Type FNN

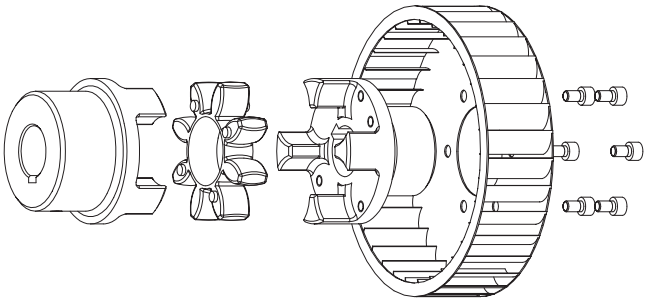

Type FNN with fan (type 1)

ROTEX® Type FNN															
Size	Ød, ØD, ØD1	Max. finish bore Ød1	Dimensions [mm]												
			D_H	D_2	D_4	d_H	E	s	b	$l_1;l_2$	P	M	z	Pitch	L_{FNN}
28	See jaw couplings on page 34 to 36 Stock programme/basic progr. see page 32 and 33	24	65	40	54	30	20	2,5	15	35	6,5	M6	8	8x45°	90
38		34	80	50	66	38	24	3,0	18	45	7,5	M8	8		114
42		42	95	60	80	46	26	3,0	20	50	9,5	M8	12	16x22,5°	126
48		48	105	68	90	51	28	3,5	21	56	10,5	M8	12		140
55		55	120	78	102	60	30	4,0	22	65	12,5	M10	8	8x45°	160
65		65	135	92	116	68	35	4,5	26	75	13,5	M10	12	16x22,5°	185
75		75	160	106	136	80	40	5,0	30	85	15,5	M12	15	20x18°	210
90		100	200	140	172	100	45	5,5	34	100	18,5	M16	15		245

Other sizes on request

Type 1: Fan screwed on
The ROTEX® coupling can be supplied with the fan screwed on. Specific connection dimensions of customers such as pitch circle of threads, size of threads and number or centering of fans should be mentioned in your inquiry.

Type 2: Fan injection-moulded
Low prices due to production volumes with higher quantities.

Type 3: Fan pressed or glued on
Special surface forming (knurling according to DIN 82) allows the fan to be pressed or bonded onto the hub collar.







Ordering example:

ROTEX® 38	FNN	92 Sh-A	1	Ø 38	1Nd	Ø30
Coupling size	Type	Spider hardness	Component	Finish bore	Component	Finish bore

Other types with clamping sets

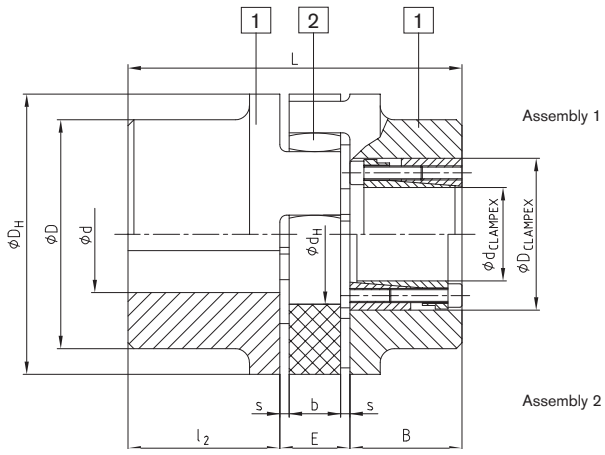

Components

ROTEX® Type No. 001 with clamping set CLAMPEX® KTR 200

Size	Ød, ØD, ØD1	Hub material	CLAMPEX® KTR 200			B	Abmessungen [mm]							
			Max. size of KTR clamping set dxD	Transmittable torque and axial force										
				T [Nm]	FAX [kN]		l_2	E	s	b	D_H	D	d_H	L
42	See jaw couplings on page 34 to 39 Stock programme/basic programme on page 32 and 33		30x55	769	51	48	50	26	3,0	20	95	—	46	length = l2+ E + B (clamping set)
48		Steel Part 1	35x60	1197	68	48	56	28	3,5	21	105	—	51	
55			45x75	2132	95	59	65	30	4,0	22	120	—	60	
65			45x75	2132	95	59	75	35	4,5	26	135	115	68	
75			50x80	3159	126	59	85	40	5,0	30	160	135	80	
90			65x95	4107	126	59	100	45	5,5	34	200	160	100	
100		GJS Part 1	65x95	4107	126	59	110	50	6,0	38	225	180	113	
110			70x110	7023	201	70	120	55	6,5	42	255	200	127	
125			80x120	8026	201	70	140	60	7,0	46	290	230	147	
140			95x135	11373	239	70	155	65	7,5	50	320	255	165	
160			110x155	16068	292	80	175	75	9,0	57	370	290	190	
180			120x165	21910	365	80	195	85	10,5	64	420	325	220	

ROTEX® Type No. 001 with clamping set CLAMPEX® KTR 200

KTR 200 size	Length	Transmittable torque and axial force		Clamping screws DIN EN ISO 4762 – 12.9		KTR 200 size	Length	Transmittable torque and axial force		Clamping screws DIN EN ISO 4762 – 12.9		KTR 200 size	Length	Transmittable torque and axial force		Clamping screws DIN EN ISO 4762 – 12.9	
dxD	B	T [Nm]	F_{ax} [kN]	zxM	T_A [Nm]	dxD	B	T [Nm]	F_{ax} [kN]	zxM	T_A [Nm]	dxD	B	T [Nm]	F_{ax} [kN]	zxM	T_A [Nm]
20x47	48	513	51	6xM6	17	38x65	48	1299	68	8xM6	17	65x95	59	4107	126	8xM8	41
22x47	48	564	51	6xM6	17	40x65	48	1368	68	8xM6	17	70x110	70	7023	201	8xM10	83
24x50	48	616	51	6xM6	17	42x75	59	1990	95	6xM8	41	75x115	70	7524	201	8xM10	83
25x50	48	641	51	6xM6	17	45x75	59	2132	95	6xM8	41	80x120	70	8026	201	8xM10	83
28x50	48	718	51	6xM6	17	48x80	59	3033	126	8xM8	41	85x125	70	10659	251	10xM10	83
30x55	48	769	51	6xM6	17	50x80	59	3159	126	8xM8	41	90x130	70	11286	251	10xM10	83
32x60	48	1094	68	8xM6	17	55x85	59	3475	126	8xM8	41	95x135	66	11373	239	10xM10	83
35x60	48	1197	68	8xM6	17	60x90	59	3791	126	8xM8	41	for further details please see CLAMPEX® catalogue					

Type 4.2 with CLAMPEX® clamping set KTR 250

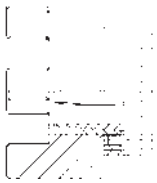

Frictionally engaged, backlash-free shaft-hub-connection for transmitting average torques.

Type 4.3 for CLAMPEX® clamping set KTR 400

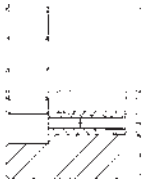

Frictionally engaged, backlash-free shaft-hub-connection for transmitting bigger torques. Maximum size of clamping set depends on the hub collar diameter. Clamping set screw fitting possible both internally and externally. For details of calculation please see CLAMPEX® catalogue.

For CLAMPEX programme please see page 264 to 298

Other types with torque limiters

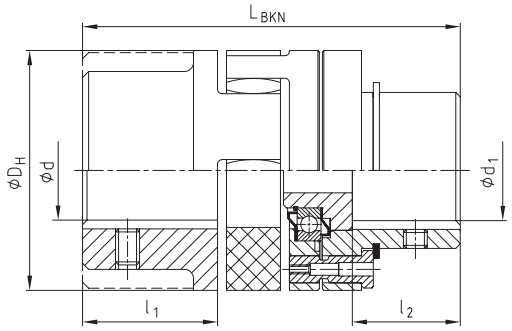

ROTEX® BKN - shear pin coupling, type BKN No. 009

Size	Max. finish bore d	Max. finish bore d1	l1	l2	LBKN	DH	Min. fracture torque [Nm]
28	See shaft coupling on page 34 to 39 Stock progr./basic progr. on page 32/33	28	35	25	101	65	100
38		38	45	35	125	80	190
42		42	50	40	139	95	250
48		48	56	46	153	105	300
55		55	65	55	177	120	400
65		65	75	65	202	135	500
75		75	85	70	230	160	600
90		100	100	85	266	200	700

Modification for customer from the stock programme.
Please specify the fracture torques with your order!
For further details please see dimension sheet No. 5020/000/009-7603

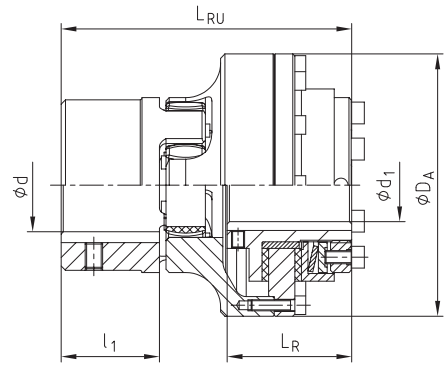

ROTEX® - RUFLEX® - Overload coupling, type No. 070

ROTEX® size	RUFLEX® size	Ratchet torques [Nm]	d	d1 max.	DA	l1	LR	LRU
14	00	0,5 — 5	See shaft coupling on page 34 to 36 Stock progr./basic progr. on page 32/33	10	44	11	31	59
19	0	2 — 20		20 [1]	63	25	33	78
24	01	5 — 70		22	80	30	45	98
28	1	20 — 200		25	98	35	52	113
38	2	25 — 400		35	120	45	57	133
48	3	50 — 800		45	162	56	68	166
75	4	90 — 1600		55	185	85	78	205

[1] Finish bore exceeding ø 19, keyway according to 6885/3

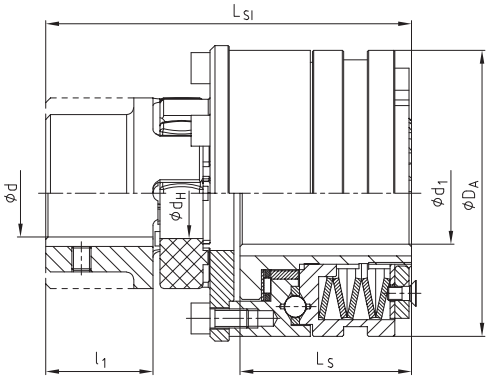

ROTEX® - KTR-SI - Overload coupling, type No. 070

ROTEX® size	KTR-SI type	KTR-SI size	Ratchet torques [Nm]	d	max. d1	DA	l1	LS	LSI
28	DK	2	12-200	See shaft coupling on page 34 to 36 Stock progr./basic progr. on page 32/33	35	100	35	56	124
	SR/SGR	0	5-40		20	55		34,5	102
38	DK	3	25-450		45	120	45	73	155
	SR/SGR	1	12-100		25	82		48	129,5
48	DK	4	50-1000		55	146	56	93,5	194
	SR/SGR	2	25-200		35	100		56	155
55	DK	5	85-2000		65	176	65	107	222,5
	SR/SGR	3	50-450		45	120		73	186
75	DK	—	—		—	—	85	—	—
	SR/SGR	4	100-2000		55	146		93,5	241,5
90	DK	—	—		—	—	100	—	—
	SR/SGR	5	170-3400		65	176		107	275,5

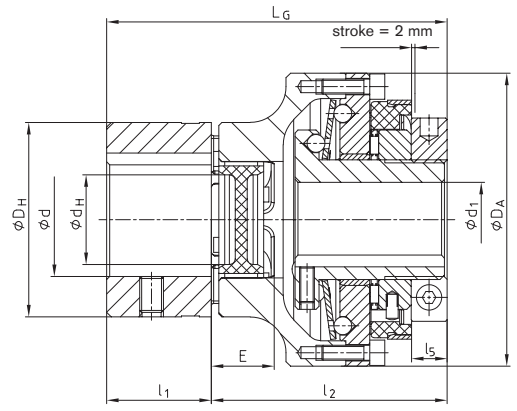

SYNTEX® - Backlash-free, torsionally rigid overload coupling with ROTEX® GS

ROTEX® size	SYNTEX® size	SYNTEX® torque range disk spring [Nm]				Max. Bore		DA	DH	dH	E	L	LG	l1	l2	l5
		DK1	DK2	SK1	SK2	d	d1									
24	20	6-20	15-30	10-20	20-65	35	20	80	55	27	18	45	100	30	70	10
28	25	20-60	45-90	25-65	40-100	40	25	98	65	30	20	50	113	35	78	11
38	35	25-80	75-150	30-100	70-180	48	35	120	80	38	24	60	136	45	91	13
48	50	60-180	175-300	80-280	160-400	55	50	162	105	51	28	70	167	56	111	14

Weights and mass moments of inertia

1 1a 2 3b 3Na 4N 6

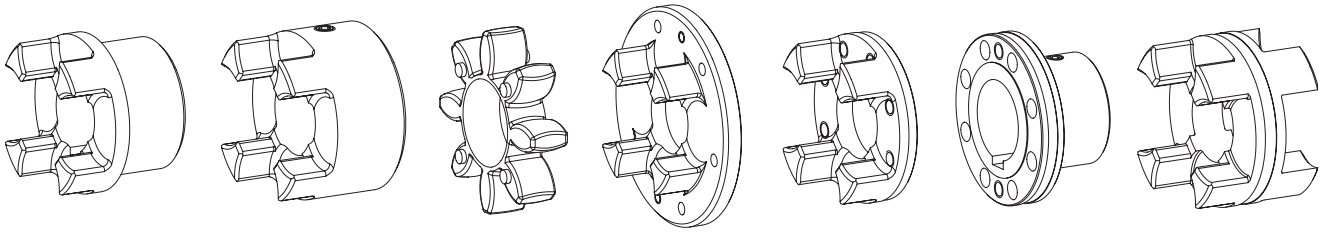

ROTEX® individual components

Size	Standard hub				Large hub			Spider	Driving flange			C-flange	DKM spacer
	Part 1				Part 1a			Part 2	Part 3b	Part 3Na		Part 4N	Part 6
	Alu [kg] [kgm²]	GJL [kg] [kgm²]	GJS [kg] [kgm²]	St [kg] [kgm²]	Alu [kg] [kgm²]	GJL [kg] [kgm²]	St [kg] [kgm²]	Polyurethane (Vulkollan) [kg] [kgm²]	GJS [kg] [kgm²]	St [kg] [kgm²]	GJS [kg] [kgm²]	St [kg] [kgm²]	Alu [kg] [kgm²]
14	–	–	–	–	0,020	–	–	0,0044	–	–	–	–	–
	–	–	–	–	0,000003	–	–	0,0000005	–	–	–	–	–
19	0,064	–	–	–	0,074	–	0,25	0,0056	–	–	–	–	–
	0,00001	–	–	–	0,00002	–	0,00006	0,000001	–	–	–	–	–
24	0,123	–	–	–	0,174	–	0,55	0,014	0,028	0,145	–	0,30	0,14
	0,00004	–	–	–	0,00008	–	0,00023	0,000006	0,00023	0,00007	–	0,00009	0,00006
28	0,200	–	–	–	0,264	–	0,89	0,024	0,54	0,232	–	0,49	0,22
	0,00010	–	–	–	0,00019	–	0,00053	0,000010	0,0007	0,00017	–	0,0002	0,00013
38	0,44	1,16	–	1,6	0,470	1,32	1,74	0,042	0,73	–	0,313	0,87	0,35
	0,00033	0,00086	–	0,00151	0,00046	0,00135	0,00155	0,00003	0,001	–	0,00038	0,0005	0,00035
42	0,69	1,75	–	2,44	0,772	2,05	2,74	0,065	1,26	–	0,608	1,4	0,47
	0,00067	0,00178	–	0,00281	0,00111	0,00291	0,00343	0,00007	0,0032	–	0,00089	0,0011	0,00068
48	0,80	2,44	–	3,34	1,01	2,78	3,72	0,086	1,45	–	0,755	1,92	0,62
	0,0012	0,00308	–	0,00473	0,00174	0,00484	0,00570	0,00013	0,0043	–	0,001358	0,0018	0,0011
55	–	3,68	–	5,05	–	4,08	5,57	0,11	2,58	–	1,243	2,93	0,90
	–	0,00615	–	0,00948	–	0,00926	0,01193	0,00023	0,0105	–	0,002920	0,0037	0,0021
65	–	5,67	–	6,79	–	6,04	8,22	0,17	3,10	–	1,635	4,36	1,31
	–	0,01240	–	0,01516	–	0,01789	0,02079	0,00042	0,0149	–	0,004891	0,0069	0,0039
75	–	8,72	–	10,5	–	9,53	14,3	0,32	4,46	–	2,511	6,80	1,97
	–	0,02644	–	0,03269	–	0,03946	0,05069	0,00116	0,0281	–	0,01050	0,0151	0,0082
90	–	14,8	–	18,7	–	18,2	24,0	0,57	6,94	–	4,151	12,84	3,45
	–	0,06730	–	0,08742	–	0,15086	0,13151	0,00323	0,0651	–	0,02723	0,0448	0,0224
100	–	–	19,7	–	–	–	–	0,81	10,2	–	6,350	16,16	–
	–	–	0,11694	–	–	–	–	0,00588	0,1165	–	0,05273	0,0798	–
110	–	–	27,4	–	–	–	–	1,19	–	–	8,578	21,35	–
	–	–	0,20465	–	–	–	–	0,01097	–	–	0,09121	0,2824	–
125	–	–	42,3	–	–	–	–	1,63	–	–	12,598	34,33	–
	–	–	0,40727	–	–	–	–	0,01972	–	–	0,17469	0,3229	–
140	–	–	58,1	–	–	–	–	2,11	–	–	17,271	48,69	–
	–	–	0,67739	–	–	–	–	0,03129	–	–	0,29247	0,4917	–
160	–	–	84,2	–	–	–	–	3,21	–	–	26,305	71,08	–
	–	–	1,31729	–	–	–	–	0,06323	–	–	0,59436	0,9693	–
180	–	–	118,5	–	–	–	–	5,25	–	–	33,076	109,43	–
	–	–	2,30835	–	–	–	–	0,13789	–	–	0,97394	1,9650	–

Weight and mass moment of inertia each refer to the average finish bore without feather keyway.

Weights and mass moments of inertia

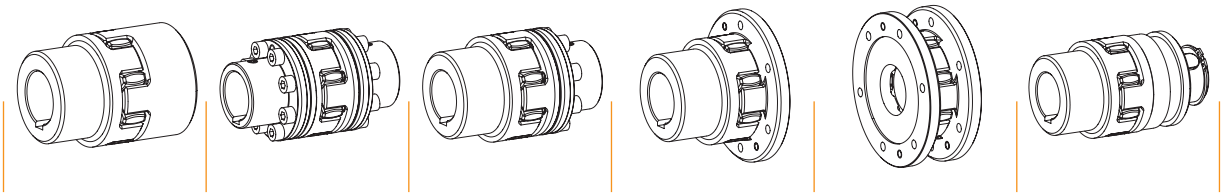

ROTEX® Complete coupling types												
Size	Standard		AFN		BFN		CF		DF		SD	
	Weight [kg]	Mass moment of inertia J [kgm²]	Weight [kg]	Mass moment of inertia J [kgm²]	Weight [kg]	Mass moment of inertia J [kgm²]	Weight [kg]	Mass moment of inertia J [kgm²]	Weight [kg]	Mass moment of inertia J [kgm²]	Weight [kg]	Mass moment of inertiaJ [kgm²]
19	0,51	0,000121	—	—	—	—	0,44	0,00016	0,38	0,00020	0,42	0,00008
24	1,1	0,000466	0,98	0,00036	1,1	0,00041	0,84	0,00047	0,57	0,00047	1,1	0,00046
28	1,8	0,00107	1,6	0,00083	1,7	0,00095	1,5	0,00124	1,1	0,00141	1,9	0,00106
38	2,5	0,00171	2,8	0,00209	2,6	0,00193	1,9	0,00217	1,5	0,00259	3,0	0,00435
42	3,9	0,00476	4,5	0,00472	4,1	0,00419	3,1	0,00513	2,6	0,00662	4,4	0,00804
48	5,3	0,00805	5,9	0,00736	5,5	0,00684	3,9	0,00755	3,0	0,00881	6,2	0,00223
55	7,9	0,01564	8,9	0,01480	8,3	0,01369	6,4	0,01692	5,3	0,02131	9,8	0,0166
65	11,9	0,03071	12,9	0,0266	12,3	0,0259	8,9	0,02780	6,4	0,003037	14,9	0,0326
75	18,6	0,06706	20,6	0,0601	19,3	0,0572	13,5	0,0557	9,2	0,05741	23,2	0,0706
90	33,6	0,22139	37,8	0,1718	34,2	0,1551	22,3	0,1356	14,5	0,1333	40,5	0,1891
100	40,2	0,23976	49,6	0,3068	45,2	0,2737	30,9	0,2401	21,2	0,2394	46,7	0,2467
110	56,0	0,42027	67,5	0,5385	61,7	0,4793	42,9	0,4324	29,8	0,4446	61,5	0,4186
125	86,2	0,83426	102,6	1,0485	94,4	0,9413	64,4	0,8187	42,2	0,8031	96,8	0,8497
140	118,3	1,38607	141,2	1,743	129,7	1,564	90,4	1,4221	62,5	1,4580	127,8	1,368
160	171,6	2,69781	210,3	3,517	190,9	3,107	127,6	2,589	83,6	2,4805	190,3	2,723
180	242,25	4,75449	306,6	6,582	274,4	5,668	175,1	4,448	107,9	4,141	262,2	4,810

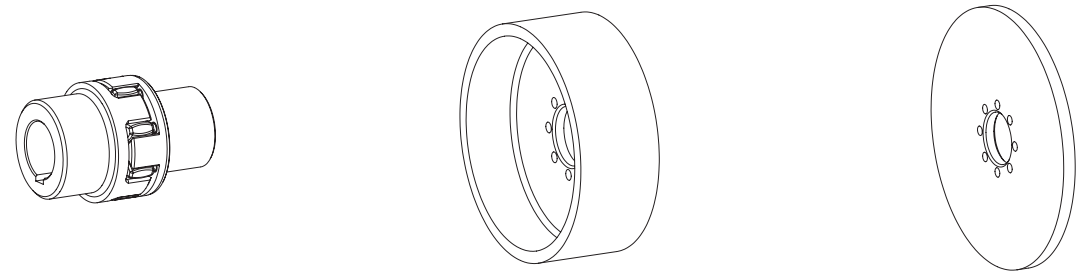

BTAN/SBAN without drum/disk		
Size	Weight [kg]	Mass moment of inertia J [kgm²]
28	0,90	0,0004
38	2,10	0,0014
42	3,24	0,0031
48	4,41	0,0053
55	6,60	0,0105
65	10,1	0,0209
75	15,4	0,0442
90	27,6	0,1224
100	36,9	0,2074
110	50,9	0,3665
125	79,1	0,7349
140	109,0	1,2292
160	161,9	2,4569
180	232,9	4,4967

Brake drum for BTAN [1)]		
Brake drum ØDB x B	Weight [kg]	Mass moment of inertia J [kgm²]
160 x 60	2,12	0,01
200 x 75	3,45	0,03
250 x 95	6,87	0,08
315 x 118	14,95	0,28
400 x 150	31,20	0,89
500 x 190	60,00	2,70
630 x 236	112,00	8,01
710 x 265	161,00	14,9
800 x 300	202,00	27,2

Brake disk for SBAN [1)]		
Brake disk ØA x GS	Weight [kg]	Mass moment of inertia J [kgm²]
200 x 12,5	2,928	0,015367
250 x 12,5	4,662	0,037584
315 x 16	8,618	0,111829
400 x 16	15,230	0,315206
500 x 16	23,964	0,769963
630 x 20	47,716	2,426359
710 x 20	60,934	3,915100
800 x 25	94,913	7,878998
900 x 25	118,954	12,609089
1000 x 25	148,240	19,234941

Technical data

POLY-NORM® Technical data

Size	Torque [Nm]			Max. speed [1/min] with V=35 m/s	Twist angle with		Torsion spring stiffness $C_{dyn.}$ [Nm/rad]				Max. permissible displacement [mm] [1]		
	Rated torque T_{KN}	Maximum torque $T_{Kmax.}$	Vibratory torque T_{KW}		T_{KN}	$T_{Kmax.}$	1.0 T_{KN}	0.75 T_{KN}	0.5 T_{KN}	0.25 T_{KN}	axial ΔKa	radial ΔKr	angular ΔKw
28	40	80	16	9650	4,5	6,0	0,52x10⁴	0,332x10⁴	0,187x10⁴	0,09x10⁴	± 1,0	0,20	1,2
32	60	120	24	8550			0,782x10⁴	0,499x10⁴	0,282x10⁴	0,135x10⁴	± 1,0	0,25	1,4
38	90	180	36	7650			1,35x10⁴	0,864x10⁴	0,489x10⁴	0,234x10⁴	± 1,0	0,25	1,5
42	150	300	60	6950			2,63x10⁴	1,68x10⁴	0,947x10⁴	0,453x10⁴	± 1,0	0,25	1,7
48	220	440	88	6300			2,99x10⁴	1,91x10⁴	1,08x10⁴	0,516x10⁴	± 1,5	0,30	1,8
55	300	600	120	5650			3,85x10⁴	2,46x10⁴	1,39x10⁴	0,664x10⁴	± 1,5	0,30	2,0
60	410	820	164	5150	4,0	5,5	6,76x10⁴	4,31x10⁴	2,32x10⁴	1,17x10⁴	± 1,5	0,30	2,2
65	550	1100	220	4750			8,18x10⁴	5,22x10⁴	2,7x10⁴	1,41x10⁴	± 1,5	0,35	2,4
75	850	1700	340	4200			12,29x10⁴	7,84x10⁴	4,06x10⁴	2,12x10⁴	± 1,5	0,40	2,7
85	1350	2700	540	3650			24,31x10⁴	15,51x10⁴	7,49x10⁴	4,19x10⁴	± 1,5	0,40	3,0
90	2000	4000	800	3300			36,16x10⁴	23,07x10⁴	11,14x10⁴	6,24x10⁴	± 1,5	0,45	3,4
100	2900	5800	1160	2950			54,82x10⁴	34,98x10⁴	16,89x10⁴	9,46x10⁴	± 3,0	0,50	3,9
110	3900	7800	1560	2650			79,23x10⁴	50,55x10⁴	24,4x10⁴	13,67x10⁴	± 3,0	0,60	4,3
125	5500	11000	2200	2350	2,5	3,5	102,3x10⁴	65,28x10⁴	31,52x10⁴	17,65x10⁴	± 3,0	0,60	4,8
140	7200	14400	2880	2100			164x10⁴	104,7x10⁴	50,85x10⁴	28,3x10⁴	± 3,0	0,60	5,5
160	10000	20000	4000	1900			209,1x10⁴	133,4x10⁴	64,82x10⁴	36,07x10⁴	± 3,0	0,65	6,1
180	13400	26800	5360	1650			267,1x10⁴	170,4x10⁴	82,79x10⁴	46,07x10⁴	± 3,0	0,65	6,0
200	19000	38000	7600	1450			159,5x10⁴	126,2x10⁴	96,24x10⁴	60,2x10⁴	± 4,0	0,65	7,8
220	30000	60000	12000	1300			218,8x10⁴	174x10⁴	128,7x10⁴	77,84x10⁴	± 4,0	0,70	8,7
240	43000	86000	17200	1200	1,5	2,1	567,9x10⁴	438,3x10⁴	301,6x10⁴	161,9x10⁴	± 4,0	0,70	9,6
260	55000	110000	22000	1000			663,8x10⁴	539,4x10⁴	382,2x10⁴	195,5x10⁴	± 4,0	0,85	11,3
280	67000	134000	26800	950			773,1x10⁴	628,1x10⁴	467,9x10⁴	266,2x10⁴	± 4,0	0,95	12,2

[1] Displacement with n = 1500 rpm

Radial and angular displacements may occur simultaneously. The combined sum of displacements must not exceed the values listed in the table . If requested, coupling is dynamically balanced (semi-key balancing G 6.3 with 1500 rpm). For circumferential speeds exceeding V = 20 m/s, dyn. balancing is recommended.

Axial displacement ΔK_a

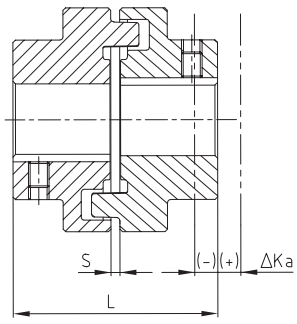

$L_{max.}/min = L + \Delta Ka$ [mm]

Radial displacement ΔK_r

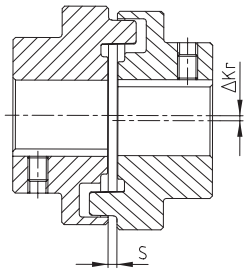

Angular displacement ΔK_w

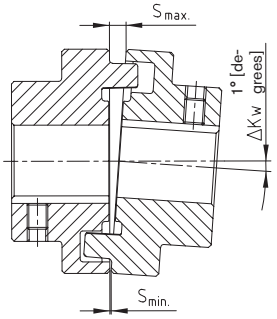

$\Delta Kw = S_{max.} - S_{Min.}$ [mm]

Assembly instructions

With assembly the coupling halves must be mounted such that the coupling and shaft are flush. Alignment has to be done such that the radial and angular displacement is as small as possible. The service life of coupling and bearings is extended by accurate alignment. Steps must be taken to ensure that the alignment will not change during all operating conditions. Shaft displacement which cannot be avoided must not exceed the figures specified in the table. Winkeliger und radialer Versatz können zugleich auftreten. The combined sum of displacements must not exceed the values listed in the table . See KTR mounting instructions, KTR standard 49510 at our homepage www.ktr.com.

General information about the elastomer

Material/Hardness	Perbunan [NBR]/78 Shore-A
Permanent temperature range [°C]	-30 to + 80
Max. temperature (short time) [°C]	-50 to + 120
Operating range	General engineering
	Pump industry
	ATEX applications
	Chemical industry
	Standard applications of average elasticity
Resistant to	Gasoline, diesel
	Acids, bases
	Tropics
	(Salt) water (hot/cold)
	Oils, greases
	Propane, butane
	Natural gas, city gas



Elastomer ring NBR 78 Shore-A

Elastomer ring Viton [FKM] 60 Shore-A for the high-temperature range on request

Selection of standard IEC motors

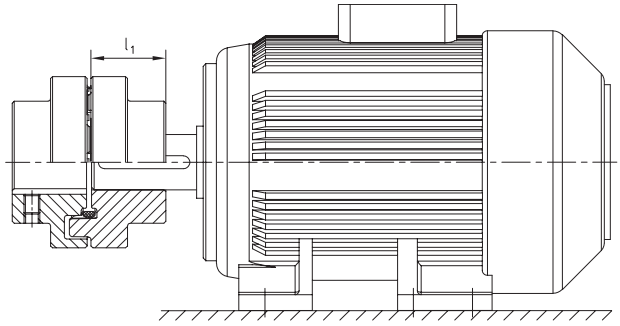

POLY-NORM®-Couplings for standard IEC motors, protection IP 54/IP 55 (elastomer ring 78 Shore-A)

A. C. motor 50 Hz			Motor output n= 3000 rpm 2 poles		POLY®-NORM coupling size	Motor output n= 1500 rpm 4 poles		POLY®-NORM coupling size	Motor output n= 1000 rpm 6 poles		POLY®-NORM coupling size	Motor output n= 750 rpm 8 poles		POLY®-NORM coupling size
Size	Shaft end dxl [mm]													
	2-pole	4, 6, 8 pole	Output P [kW]	Torque T [Nm]		Output P [kW]	Torque T [Nm]		Output P [kW]	Torque T [Nm]		Output P [kW]	Torque T [Nm]	
56	9 x 20		0,09	0,32		0,06	0,43		0,037	0,43				
			0,12	0,41		0,09	0,64		0,045	0,52				
63	11 x 23		0,18	0,62		0,12	0,88		0,06	0,7				
			0,25	0,86		0,18	1,3		0,09	1,1				
71	14 x 30		0,37	1,3		0,25	1,8		0,18	2		0,09	1,4	
			0,55	1,9		0,37	2,5		0,25	2,8		0,12	1,8	
80	19 x 40		0,75	2,5	28/32	0,55	3,7	28/32	0,37	3,9	28/32	0,18	2,5	28/32
			1,1	3,7		0,75	5,1		0,55	5,8		0,25	3,5	
90S	24 x 50		1,5	5		1,1	7,5		0,75	8		0,37	5,3	
90L			2,2	7,4		1,5	10		1,1	12		0,55	7,9	
100L	28 x 60		3	9,8		2,2	15		1,5	15		0,75	11	
						3	20					1,1	16	
112M			4	13		4	27		2,2	22		1,5	21	
132S	38 x 80		5,5	18	38	5,5	36	38	3	30	38	2,2	30	38
			7,5	25										
132M						7,5	49		4	40		3	40	
									5,5	55				
160M	42 x 110		11	36	42	11	72	42	7,5	75	42	4	54	42
			15	49								5,5	74	
160L			18,5	60		15	98		11	109		7,5	100	
180M	48 x 110		22	71	48	18,5	121	48			48			48
180L						22	144		15	148		11	145	
200L	55 x 110		30	97	55	30	196	55	18,5	181	55	15	198	55
			37	120					22	215				
225S	55 x 110	60 x 140				37	240	60			60	18,5	244	60
225M			45	145		45	292		30	293		22	290	
250M	60 x 140	65 x 140	55	177	60	55	356	65	37	361	65	30	392	65
280S	65 x 140	75 x 140	75	241		75	484	75	45	438	75	37	483	75
280M			90	289	65	90	581		55	535		45	587	
315S		80 x 170	110	353		110	707	85	75	727	85	55	712	85
315M			132	423	75	132	849		90	873		75	971	
			160	513		160	1030		110	1070	90	90	1170	90
315L			200	641		200	1290	90	132	1280		110	1420	
		85 x 170			85				160	1550	100	132	1710	100
315			250	802		250	1600	100	200	1930		160	2070	
			315	1010		315	2020		250	2410	110	200	2580	110
355	75 x 140	95 x 170	355	1140	90	355	2280	110	315	3040	125	250	3220	125
			400	1280		400	2570		400	3850		315	4060	
			500	1600		500	3210	125			140			140
400	80 x 170	110 x 210	560	1790	100	560	3580		450	4330		355	4570	
			630	2020		630	4030		500	4810		400	5150	
			710	2270	110	710	4540	140	560	5390	160	450	5790	160
450	90 x 170	120 x 200	800	2560		800	5120	160	630	6060		500	6420	
			900	2880	125	900	5760		710	6830	180	560	7190	180
			1000	3200		1000	6400		800	7690		630	8090	

The coupling selection is based on an ambient temperature up to 30 °C. For the selection there is a minimum safety factor of 2 of the max. coupling torque (TKmax.). A detailed selection is possible according to catalogue, page 11 et seqq. Drives with periodical torque curves must be selected according to DIN 740 part 2. If requested, KTR will perform the selection.
Torque T = rated torque according to Siemens catalogue M 11 · 1994/95..

POLY-NORM® AR
Flexible couplings

Two-part



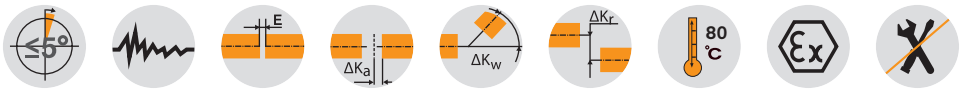

Components

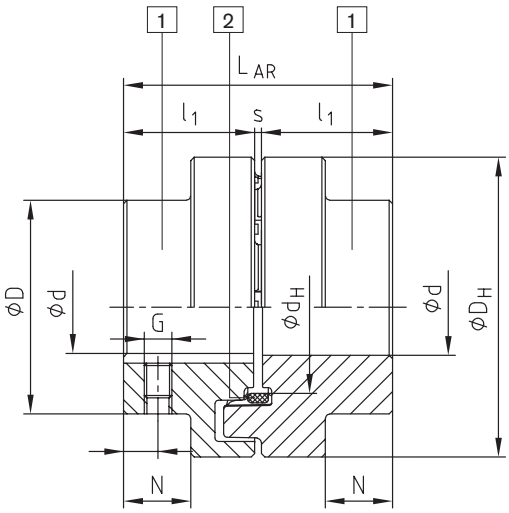

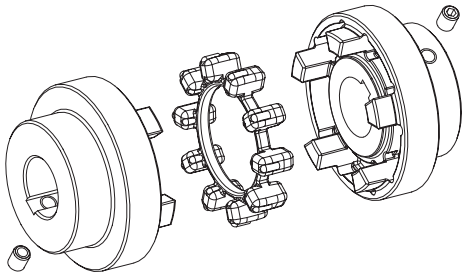

Size 28-125

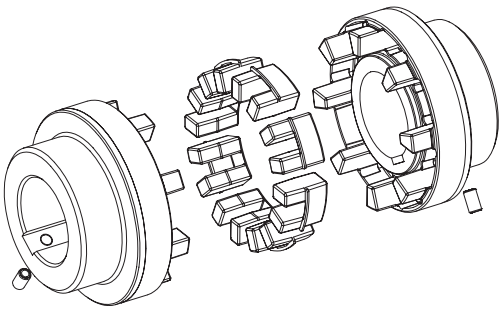

Size 140-280

Components of type AR 1 = standard hub (GJL) 2 = elastomer ring (up to size 180: NBR 78 Sh-A; from size 200: T-PUR® 84 Sh-A)

POLY-NORM® Type AR

Size	Elastomer ring (part 2) [1] torque [Nm]		Max. finish bore Ød [2]	Dimensions [mm]									Mass moment of inertia [kgm²] [3]	AR [3] weight [kg]
				General							Thread for setscrews			
	T_{KN}	$T_{Kmax.}$		L_{AR}	l_1	s	D_H	D	d_H	N	G	t		
28	40	80	30	59	28	3	69	46	36,5	12	M5	7	0,0004	0,9
32	60	120	35	68	32	4	78	53	41,5	14	M8	7	0,0008	1,4
38	90	180	40	80	38	4	87	62	50	19,5	M8	10	0,0016	2,0
42	150	300	45	88	42	4	96	69	55,5	20	M8	10	0,0026	2,7
48	220	440	50	101	48	5	106	78	64	24	M8	15	0,0042	3,7
55	300	600	60	115	55	5	118	90	73	29	M8	14	0,0070	5,5
60	410	820	65	125	60	5	129	97	81	33	M8	15	0,0112	6,9
65	550	1100	70	135	65	5	140	105	86	36	M10	20	0,0174	8,8
75	850	1700	80	155	75	5	158	123	100	42,5	M10	20	0,028	13,5
85	1350	2700	90	175	85	5	182	139	116	48,5	M10	25	0,052	19,5
90	2000	4000	95	185	90	5	200	148	128	49	M12	25	0,090	23,2
100	2900	5800	110	206	100	6	224	165	143	55	M12	25	0,160	31,9
110	3900	7800	50-120	226	110	6	250	185	158	60	M16	30	0,317	38,0
125	5500	11000	55-140	256	125	6	280	210	178	70	M16	35	0,570	55,2
140	7200	14400	65-155	286	140	6	315	235	216	76,5	M20	35	1,030	92,6
160	10000	20000	75-175	326	160	6	350	265	246	94,5	M20	45	1,746	126,9
180	13400	26800	75-200	366	180	6	400	300	290	111,5	M20	50	3,239	181,8
200	19000	38000	85-200	408	200	8	450	335	-	126	M24	50	5,728	263,7
220	30000	60000	95-220	448	220	8	500	370	-	140	M24	50	9,489	355,9
240	43000	86000	105-240	488	240	8	550	405	-	154	M24	50	14,963	466,3
260	55000	110000	115-260	530	260	10	650	440	-	158	M24	60	29,504	672,2
280	67000	134000	125-280	570	280	10	700	475	-	172	M24	60	42,451	836,6

[1] Standard material Perbunan (NBR) 78 Shore-A, size 140-280 double tooth elastomers. For selection see page 10 et seqq.
[2] Bores H7 with keyway to DIN 6885 sheet 1 [JS9] and thread for setscrews on the feather keyway
[3] Referring to average bore

For taper clamping bush



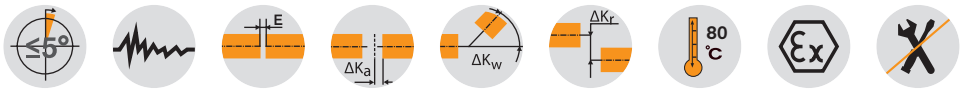

Components

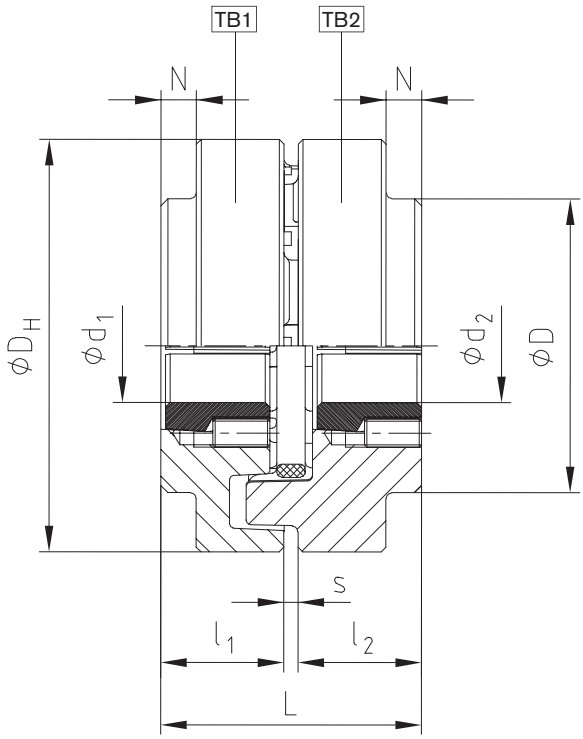

POLY-NORM® for taper clamping bush															
Size	Taper clamping bush	Dimensions [mm]		Fixing screws [1] for taper clamping bush				Size	Taper clamping bush	Dimensions [mm]		Fixing screws [1] for taper clamping bush			
		max. $d_1;d_2$	$l_1;l_2$	Size [inch]	Length [mm]	SW [mm]	T_A [Nm]			max. $d_1;d_2$	$l_1;l_2$	Size [inch]	Length [mm]	SW [mm]	T_A [Nm]
32	1108	25	25,5	1/4"	13	3	5,7	75	2517	60	52,5	1/2"	25	6	49
42	1210	32	31,0	3/8"	16	5	20	85	2517	60	46,5	1/2"	25	6	49
48	1610	40	30,0	3/16"	16	5	20		3030	75	82	5/8"	32	8	90
	1615	40	42,5	3/8"	16	5	20	90	3020	75	52,0	5/8"	32	8	92
60	2012	50	38,5	7/16"	22	6	31	100	3535	90	98,0	1/2"	38	10	115
65	2517	60	62,5	1/2"	25	6	49	125	4040	100	111,5	5/8"	45	12	172

[1] Each 2 fastening screws except for 3535/4040 3 fixing screws.
Coupling type TB1 screwing on cam side - TB2 screwing on collar side
Combination possible! Please order our separate data sheet M407045.

Ordering example:	POLY-NORM® 38	AR	Ø38	Ø30
	Coupling size	Type	Finish bore	Finish bore

POLY-NORM® ADR
Flexible couplings

Three-part



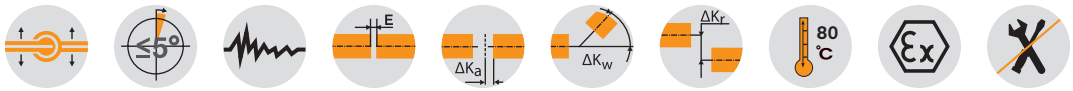

Components

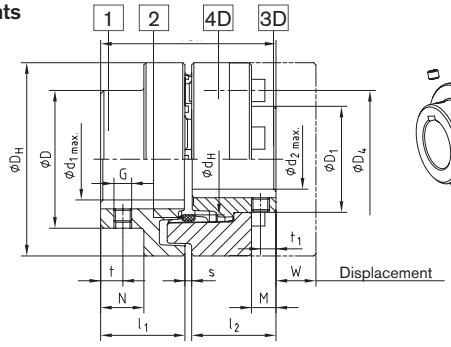

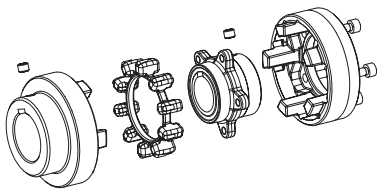

Size 38-125

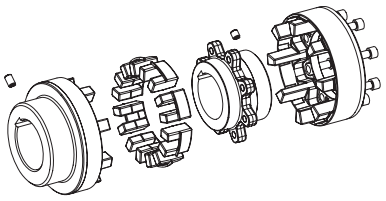

Size 140-280

Components:
Type ADR (Three-part)
1 = Standard hub* (GJL)
2 = Elastomer ring (up to size 180 NBR 78 Sh-A; from size 200: T-PUR® 84 Sh-A)
3D = Flange hub (up to size 180: GJS; from size 200: steel) 4D = cam ring (GJL)
* To be preferably used on driving side

POLY-NORM® Type ADR

Size	Torque of elastomer ring [Nm] 1)		Dimensions [mm]																
			Max. finish bore 2)		General										Thread for setscrew			
	TKN	T_{Kmax}	d1	d2	L_{ADR}	l_1; l_2	s	D_H	D	D_1	d_H	N	M	W	G	t	t_1	TA [Nm]
38	90	180	40	34	80	38	4	87	62	48	50	19,5	11,0	12	M8	10	7	10
42	150	300	45	38	88	42	4	96	69	54	55,5	20	12,0	16	M8	10	7	10
48	220	440	50	44	101	48	5	106	78	62	64	24	13,7	16	M8	15	7	10
55	300	600	60	50	115	55	5	118	90	72	73	29	18,7	15	M8	14	14	10
60	410	820	65	56	125	60	5	129	97	80	81	33	22,2	14	M8	15	15	10
65	550	1100	70	60	135	65	5	140	105	86	86	36	26,7	11	M10	20	20	17
75	850	1700	80	68	155	75	5	158	123	98	100	42,5	27,8	16	M10	20	20	17
85	1350	2700	90	78	175	85	5	182	139	112	116	48,5	33,7	18	M10	25	25	17
90	2000	4000	95	85	185	90	5	200	148	122	128	49	31,5	26	M12	25	25	40
100	2900	5800	110	95	206	100	6	224	165	136	143	55	37,5	28	M12	25	25	40
110	3900	7800	50-120	105	226	110	6	250	185	150	158	60	39,5	30	M16	30	30	80
125	5500	11000	55-140	115	256	125	6	280	210	168	178	70	48,0	35	M16	35	35	80
140	7200	14400	65-155	55-135	286	140	6	315	235	195	216	76,5	47,0	59	M20	35	35	140
160	10000	20000	75-175	65-155	326	160	6	350	265	225	246	94,5	65,0	43	M20	45	45	140
180	13400	26800	75-200	65-175	366	180	6	400	300	255	290	111,5	79,0	33	M20	50	50	140
200	19000	38000	85-200	200	408	200	8	450	335	290	-	126	95	7	M24	50	50	240
220	30000	60000	95-220	220	448	220	8	500	370	320	-	140	103	8	M24	50	50	240
240	43000	86000	105-240	240	488	240	8	550	405	350	-	154	119	1	M24	50	50	240
260	55000	110000	115-260	260	530	260	10	650	440	380	-	158	109	34	M24	60	60	240
280	67000	134000	125-280	280	570	280	10	700	475	410	-	172	109	29	M24	60	60	240

Classification of cylinder screws DIN EN ISO 4762–12.9

Size	M x l [mm]	Number z	Pitch z x angle	D_4 [mm]	T_A [Nm] 3)	Size	M x l [mm]	Number z	Pitch z x angle	D_4 [mm]	T_A [Nm] 3)
38	M6x16	5	5x72	62	10	110	M16x40	8	8x45	183	210
42	M8x16	5	5x72	69	25	125	M20x40	8	8x45	202	410
48	M8x20	6	6x60	78	25	140	M20x50	8	8x45	237	410
55	M8x20	6	6x60	88	25	160	M20x55	9	9x40	267	410
60	M8x20	6	6x60	98	25	180	M20x60	10	10x36	304	410
65	M10x20	6	6x60	104	49	200	M20x60	10	10x36	342	580
75	M10x25	6	6x60	120	49	220	M24x70	10	10x36	378	1000
85	M12x25	6	6x60	138	86	240	M27x70	10	10x36	416	1500
90	M16x30	6	6x60	149	210	260	M30x90	10	10x36	480	2000
100	M16x30	6	6x60	163	210	280	M30x90	10	10x36	520	2000

1) Standard material Perbunan (NBR) 78 Shore-A, size 140-280 double tooth elements. For selection see page 10 et seqq.
2) Bore H7 with feather keyway DIN 6885 sheet 1 [JS9] with thread for setscrews 3) Screw tightening torques acc. to 8.8

Ordering example:

POLY-NORM® 65	ADR	d_1=Ø55	d_2=Ø60
Coupling size	Type	Finish bore	Finish bore

With brake drum/brake disk for brake stop

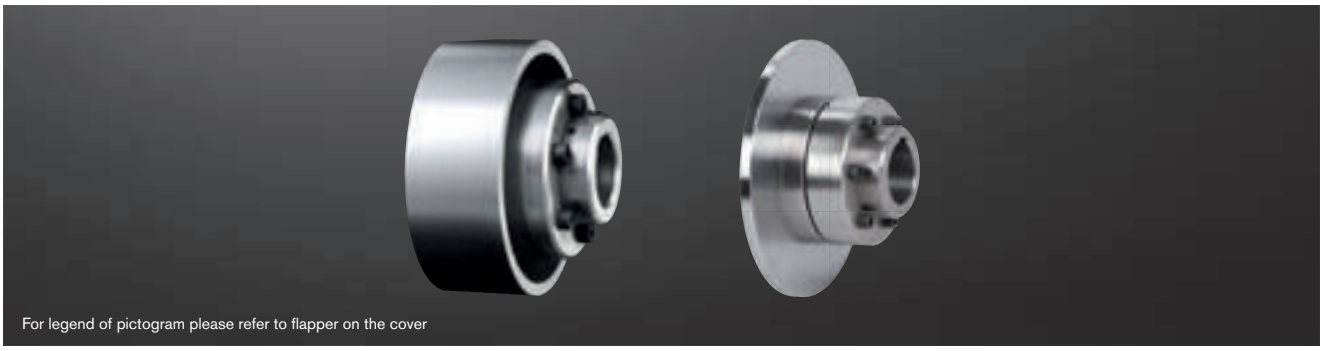

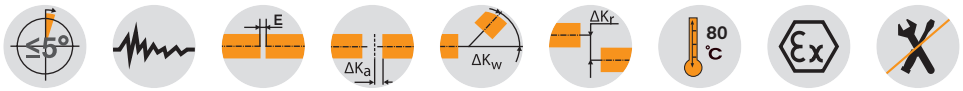

Components

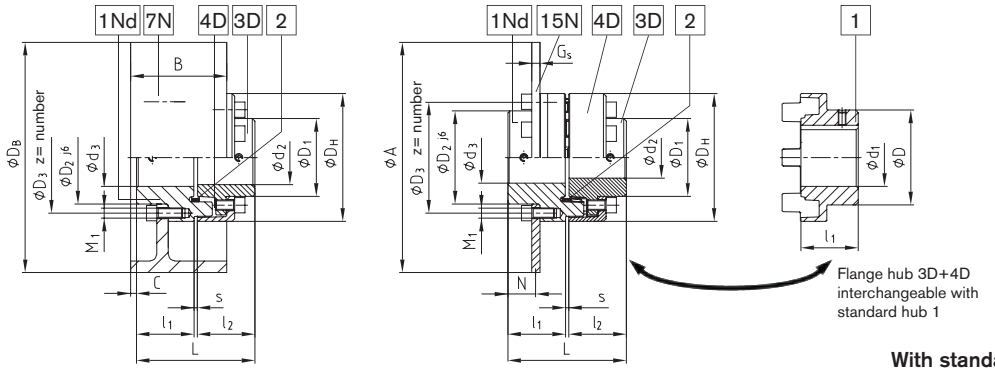

Brake drum type ADR-BTA

Brake disk type ADR-SBA

With standard hub type WAR-BTA or AR-SBA

POLY-NORM® Type AR-BTA, AR-SBA, ADR-BTA and ADR-SBA

Size	Torque of elastomer ring [Nm] 1)		Dimensions [mm]												
	TKN	$TK_{max.}$	D; D_1	Maximum finish bore d_1	d_2	d_3	D_H	D_2	D_3	z	M_1	l_1; l_2	s	L
38	90	180	For dimension ØD, ØD_1 please refer to our company catalogue on page 64 and 65	40	34	38	87	61	75	5 x 72°	M6	38	4	80
42	150	300		45	38	42	96	68	82	5 x 72°	M8	42	4	90
48	220	440		50	44	48	106	77	92	6 x 60°	M8	48	5	101
55	300	600		60	50	55	118	88	104	6 x 60°	M8	55	5	115
60	410	820		65	56	60	129	96	114	6 x 60°	M8	60	5	125
65	550	1100		70	60	65	140	104	122	6 x 60°	M10	65	5	135
75	850	1700		80	68	75	158	121	140	6 x 60°	M10	75	5	155
85	1350	2700		90	78	85	182	137	160	6 x 60°	M12	85	5	175
90	2000	4000		95	85	90	200	146	174	6 x 60°	M16	90	5	185
100	2900	5800		110	95	100	224	164	195	6 x 60°	M16	100	6	206
110	3900	7800		50-120	105	50-110	250	184	218	8 x 45°	M16	110	6	226
125	5500	11000		55-140	115	55-125	280	208	245	8 x 45°	M20	125	6	256
140	7200	14400		65-155	55-135	65-140	315	233	276	8 x 45°	M20	140	6	286
160	10000	20000		75-175	65-155	75-160	350	263	308	9 x 40°	M20	160	6	326
180	13400	26800		75-200	65-175	75-180	400	298	349	10 x 36°	M20	180	6	366

POLY-NORM® Type BTA

POLY-NORM® Size	38	42	48	55	60	65	75	85	90	100	110	125	140	160	180	Speed rpm with v= 60 m/s 3)
ØDBxB brake drum 2)	Dimensions [mm] C															
160x60	4															7150
200x75	9	8	4													5725
250x95	17	16	20	7	3	0										4575
315x118		25	21	16	12	9	2,5	-3,5								3625
400x150			34	28	25	22	15,5	9,5	9	3						2850
500x190									18	12	-2					2275
630x236											20	13	-4			1800
710x265												24	7	-11		1600

POLY-NORM® Type SBA

POLY-NORM® Size	38	42	48	55	60	65	75	85	90	100	110	125	140	160	180	Speed rpm with v= 60 m/s 3)
ØAxG brake disk 2)	Dimensions [mm] N															
200x12,5	13,75															5725
250x12,5	13,75	14,75	18,75													4575
315x16		13	17	22	26	29	35,5									3625
400x16			17	22	26	29	35,5	41,5	42	48						2850
500x16				22	26	29	35,5	41,5	42	48	54	64				2275
630x20										46	52	62	69	86		1800
710x20										46	52	62	69	86	104	1600
800x25										43,5	49,5	59,5	66,5	83,5	101,5	1425
900x25											49,5	59,5	66,5	83,5	101,5	1250

1) Standard material Perbunan [NBR], for selection see page 10 et seqq.
2) Steel 3) Dynamic balancing required

Other sizes on request

Ordering example:

POLY-NORM® 38	ADR-BTA	Ø200 x 75	d_2=Ø32 NnD	d_3=Ø25 NnD
Coupling size	Type	Ø brake drum	Component with finish bore	Component with finish bore

POLY-NORM® ADR-SB
Flexible couplings

With brake disk for brake stop



Components

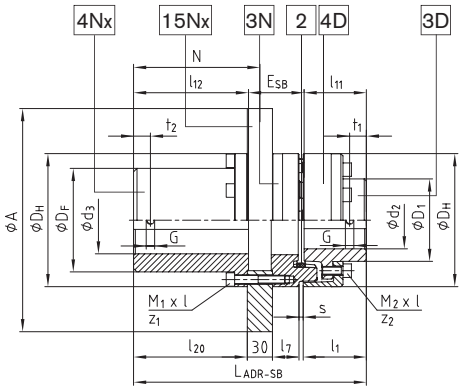

Type ADR-SB with brake disk

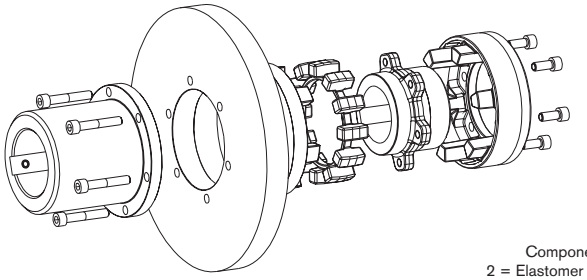

Components
2 = Elastomer ring
3D = Flange hub
4.D = Cam ring
3N = Driving flange
15Nx = Brake disk
4.Nx = Coupling flange

POLY-NORM® Type ADR-SB

Size	Torque of elastomer ring [Nm] 1)		Max. finish bore [mm]		Dimensions [mm]													Thread for setscrew		
	T_{KN}	T_{Kmax}	d_2	d_3	D_H	N	l_2	s	l_{11}	l_{12}	D_F	l_7	l_{20}	L_{ADR-SB}	D_1	E	G	t_1/t_2	T_A [Nm]
55	300	600	50	60	118	150	55	5	54,7	136,5	88	24,0	135	249,0	72	57,8	M8	15	10
60	410	820	56	65	129	150	50	5	59,2	136,5	97	25,0	135	255,0	80	59,3	M8	20	10
65	550	1100	60	70	140	150	65	5	63,7	136,5	105	26,5	135	261,5	86	61,3	M10	20	17
75	850	1700	68	80	158	150	75	5	74,0	136,5	123	31,5	135	276,5	98	66,0	M10	20	17
85	1350	2700	78	90	182	150	85	5	84,7	136,5	139	35,0	135	290,0	112	68,8	M10	25	17
90	2000	4000	85	100	200	150	90	5	89,5	136,5	148	39,5	135	299,5	122	73,5	M12	25	40
100	2900	5800	95	110	224	190	100	6	95,5	177,0	165	43,0	175	354,0	136	81,5	M12	25	40
110	3900	7800	105	120	250	190	110	6	105,5	177,0	185	48,0	175	369,0	150	86,5	M16	30	80
125	5500	11000	115	140	280	195	125	6	120,5	182,0	210	53,0	180	394,0	168	91,5	M16	35	80
140	7200	14400	135	160	315	195	140	6	130,0	182,0	235	60,5	180	416,5	195	104,5	M20	35	140
160	10000	20000	155	180	350	195	160	6	150,0	182,0	265	62,5	180	438,5	225	106,5	M20	45	140

Selection of brake disks and cylinder screws

Size	ØA brake disk [mm]/ 30 mm thick 2) 3)	Cap screws DIN EN ISO 4762 for brake disk			Cap screws DIN EN ISO 4762 for flange hub/cam ring		
		M_1 x l	Number z_1	Tightening torque T_A [Nm]	M_2 x l	Number z_2	Tightening torque T_A [Nm]
55	250 — 450	M8x20	6	10	M8x20	6	25
60	250 — 500	M8x20	6	10	M8x20	6	25
65	315 — 500	M8x55	6	35	M10x20	6	49
75	315 — 560	M10x60	6	69	M10x25	6	49
85	355 — 560	M10x60	6	69	M12x25	6	86
90	400 — 710	M12x65	6	120	M16x30	6	210
100	400 — 800	M12x65	6	120	M16x30	6	210
110	450 — 900	M16x75	8	295	M16x40	8	210
125	450 — 900	M16x75	8	295	M20x40	8	410
140	500 — 900	M20x80	8	410	M20x50	8	410
160	560 — 900	M20x90	9	410	M20x55	9	410

1) Standard material Perbunan [NBR], for selection see page 10 et seqq.
2) Steel
3) For circumferential speeds exceeding 20 m/s (referring to outside diameter ØD_H) dynamic balancing is necessary.
Maximum circumferential speed = 60 m/s (referring to the diameter of brake disk ØA) Other sizes on request.

Ordering example:

POLY-NORM® 75	ADR-SB	Ø500 x 30	3D d2 - Ø60 NnD	4Nx d3 - Ø70 NnD
Coupling size	Type	Brake disk ØA/width	Component with finish bore	Component with finish bore

Standard drop-out center design coupling

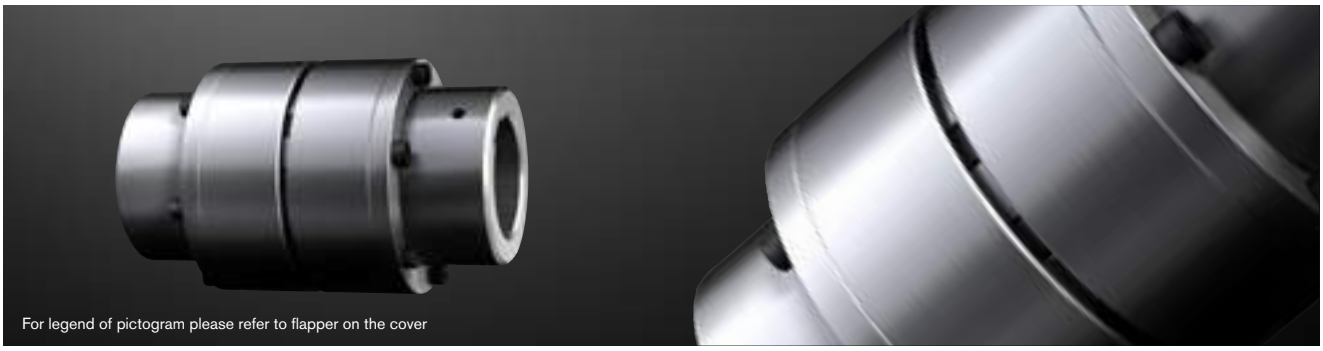

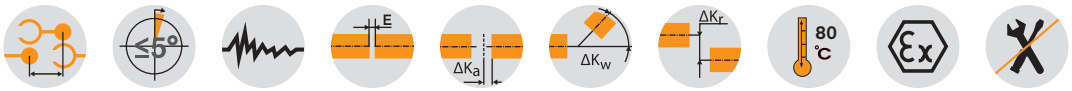

Components

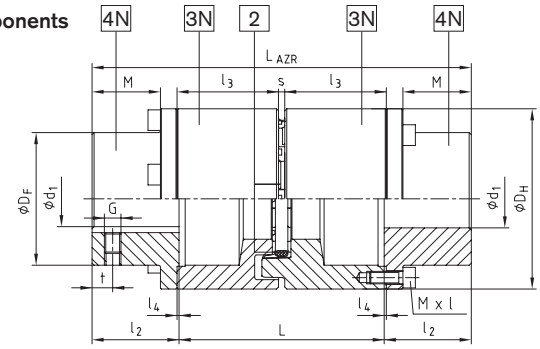

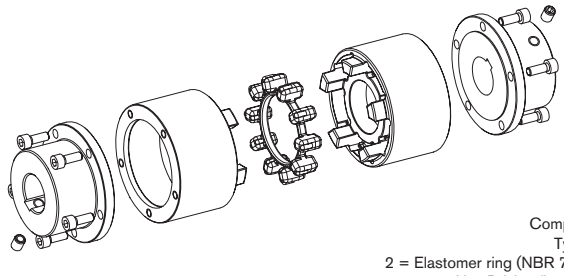

Components:
Type AZR
2 = Elastomer ring (NBR 78 Sh-A)
3N = Driving flange (GJL)
4.N = Coupling flange (Steel)

POLY-NORM® Type AZR

Size	Drop-out center length* L [mm]	Elastomer ring (part 2)[1] Torque [Nm]		Max. finish bore [2] Ød1	Dimensions [mm]											Mass moment of inertia [3] [kgm²]	AZR weight [3] [kg]
					General									Thread for set-screw			
		T_{KN}	T_{Kmax}		L_{AZR}	l_2	l_3	s	l_4	D_H	D_F	M	Mxl	T_A [Nm]	G	t	
28	100	40	80	30	170	35	49,5	3	1	69	46	26	M6x18	14	M5	7	0,0020	2,4
	140				210		69,5										0,0030	2,9
32	100	60	120	35	170	35	49	4	1	78	53	26	M6x18	14	M8	7	0,0042	3,2
	140				210		69										0,0062	3,9
38	100	90	180	40	184	42	49	4	1	87	62	33	M6x20	14	M8	10	0,0048	4,3
	140				224		69										0,0068	5,1
42	100	150	300	45	190	45	49	4	1	96	69	35	M6x20	14	M8	10	0,0094	5,1
	140				230		69										0,0128	6,0
48	100	220	440	50	204	52	49	5	1,5	106	78	41,5	M6x20	14	M8	15	0,0170	6,6
	140				244		69										0,0216	7,5
	100				210		49										0,0188	9,4
55	140	300	600	60	250	55	69	5	1,5	118	88	43,5	M8x25	35	M8	14	0,0240	10,8
	180				290		89										0,0232	12,2
	100				220		49										0,0326	11,2
60	140	410	820	65	260	60	69	5	1,5	129	97	47,5	M8x25	35	M8	15	0,0414	13,0
	180				300		89										0,0504	14,6
	100				230		49										0,0564	14,0
65	140	550	1100	70	270	65	69	5	1,5	140	105	51,5	M8x25	35	M10	20	0,0730	15,8
	180				310		89										0,0894	17,5
	140				290		69										0,0824	23,2
75	180	850	1700	80	330	75	89	5	1,5	158	123	60,5	M10x30	69	M10	20	0,1008	25,6
	250				400		124										0,1332	29,8
	140				310		69										0,1570	32,1
85	180	1350	2700	90	350	85	89	5	1,5	182	139	69,5	M10x30	69	M10	25	0,1658	35,2
	250				420		124										0,1812	40,7
	140				320		69										0,2466	38,2
90	180	2000	4000	100	360	90	89	5	1,5	200	148	73,5	M12x35	120	M12	25	0,2880	42,2
	250				430		124										0,3566	49,3
	140				340		69										0,3988	50,0
100	180	2900	5800	110	380	100	89	6	2	224	165	83	M12x35	120	M12	25	0,4450	54,8
	250				450		124										0,5465	63,2

[1] Standard material Perbunan [NBR] 78 Shore-A, selection see page 10 et seqq.
[2] Bores H7 with keyway to DIN 6885 sheet 1 [JS9] and thread for setscrews on the feather keyway
[3] Referring to average bore
**For other extendable lengths (L=120/160/195/215) it is possible to combine two driving flanges 3N with various lengths. (As an example: driving flanges POLY-NORM® 85 for extendable length 140 and 250 result in an extendable length of 195 mm (140 mm + 250 mm = 390 mm 390 mm/2 = 195 mm)

Ordering example:

POLY-NORM® 42	AZR	140	Ø38	Ø42
Coupling size	Type	Drop-out center length L	Finish bore	Finish bore

POLY
Flexible couplings

Selection of standard IEC motors

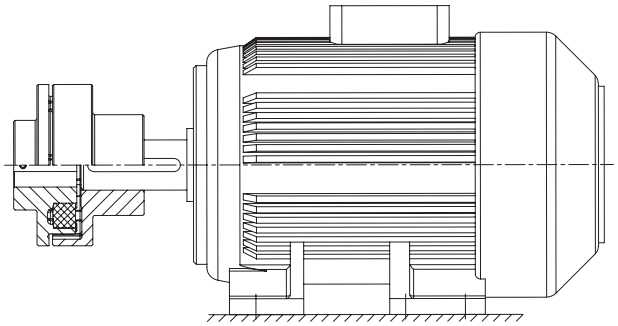

POLY-POLY couplings for standard IEC motors, protection IP 54/IP 55

A. C. motor 50 Hz			Motor output n= 3000 rpm 2 poles		POLY coupling size	Motor output n= 1500 rpm 4 poles		POLY coupling size	Motor output n= 1000 rpm 6 poles		POLY coupling size	Motor output n= 750 rpm 8 poles		POLY coupling size
Size	Shaft end dxl [mm] 2 poles	4, 6, 8 poles	Output P [kW]	Torque T [Nm]		Output P [kW]	Torque T [Nm]		Output P [kW]	Torque T [Nm]		Output P [kW]	Torque T [Nm]	
56	9 x 20		0,09	0,32		0,06	0,43		0,037	0,43				
			0,12	0,41		0,09	0,64		0,045	0,52				
63	11 x 23		0,18	0,62		0,12	0,88		0,06	0,7				
			0,25	0,86	8	0,18	1,3	8	0,09	1,1	8			8
71	14 x 30		0,37	1,3		0,25	1,8		0,18	2		0,09	1,4	
			0,55	1,9		0,37	2,5		0,25	2,8		0,12	1,8	
80	19 x 40		0,75	2,5		0,55	3,7		0,37	3,9		0,18	2,5	
			1,1	3,7		0,75	5,1		0,55	5,8		0,25	3,5	
90S	24 x 50		1,5	5		1,1	7,5		0,75	8		0,37	5,3	
90L			2,2	7,4		1,5	10		1,1	12		0,55	7,9	
100L	28 x 60		3	9,8	9	2,2	15	9	1,5	15	9	0,75	11	9
						3	20					1,1	16	
112M			4	13		4	27		2,2	22		1,5	21	
132S	38 x 80		5,5	18		5,5	36		3	30		2,2	30	
			7,5	25	10			10			10			10
132M						7,5	49		4	40		3	40	
									5,5	55				
160M	42 x 110		11	36		11	72		7,5	75		4	54	
			15	49	12			12				5,5	74	
160L			18,5	60		15	98		11	109	14	7,5	100	14
180M	48 x 110		22	71		18,5	121	14						
180L						22	144		15	148		11	145	
200L	55 x 110		30	97		30	196	15	18,5	181	15	15	198	15
			37	120	15				22	215				
225S	55 x 110	60 x 140				37	240	17				18,5	244	17
225M			45	145		45	292	19	30	293	19	22	290	19
250M	60 x 140	65 x 140	55	177	17	55	356		37	361		30	392	
280S	65 x 140	75 x 140	75	241		75	484	20	45	438	20	37	483	20
280M			90	289	19*	90	581		55	535		45	587	
315S		80 x 170	110	353		110	707	22	75	727	22	55	712	22
315M			132	423	20*	132	849	25	90	873	25	75	971	25
			160	513		160	1030		110	1070		90	1170	
315L			200	641		200	1290	28	132	1280	28	110	1420	28
		85 x 170			22*				160	1550		132	1710	
315			250	802		250	1600		200	1930	30	160	2070	30
			315	1010		315	2020		250	2410		200	2580	
355	75 x 140	95 x 170	355	1140		355	2280	30						35
			400	1280		400	2570		315	3040		250	3220	
			500	1600		500	3210		400	3850	35	315	4060	
400	80 x 170	110 x 210	560	1790		560	3580	35	450	4330		355	4570	
			630	2020		630	4030		500	4810		400	5150	40
			710	2270		710	4540		560	5390	40	450	5790	
450	90 x 170	120 x 210	800	2560		800	5120	40	630	6060		500	6420	
			900	2880		900	5760							
			1000	3200		1000	6400							

The coupling selection is based on an ambient temperature up to + 30 °C. The coupling was selected for normal operation. The respective couplings have a minimum operating factor of f min. = 1,35. Drives with periodical torque courses must be selected according to DIN 740 part 2. If requested, KTR will perform the selection.

Torque T = rated torque according to Siemens catalogue M 11 · 1994/95..

* Dynamic balancing is necessary.

POLY PKZ and PKD
Flexible couplings

PKZ (two-part) and PKD (three-part)

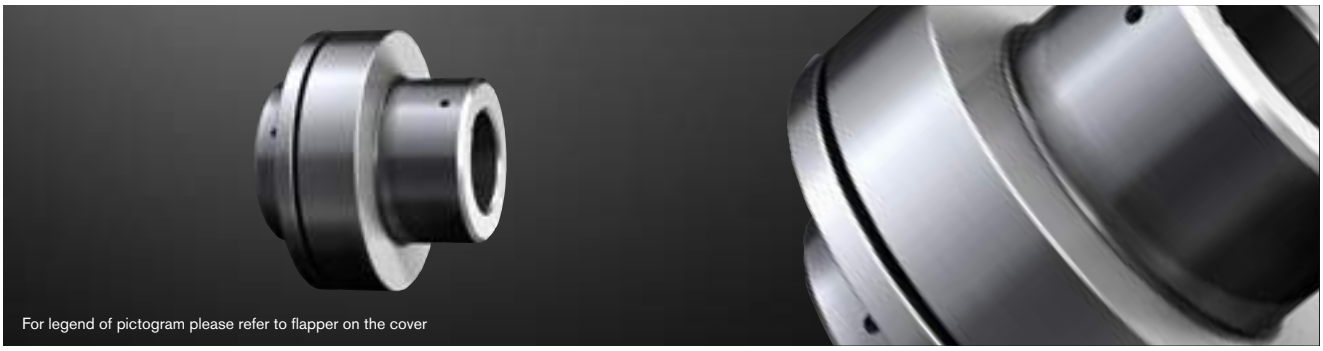

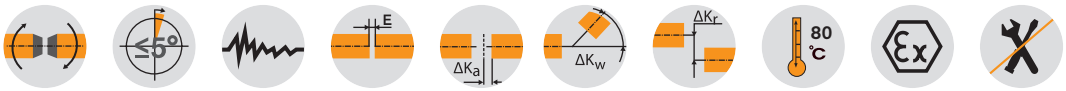

Components

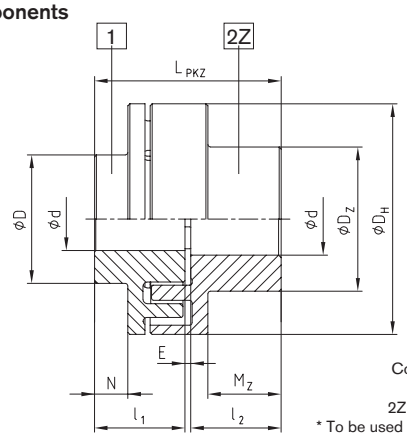

Components: Type PKZ (Z)
1 = Cam section (GJL)
2Z = Pocket section * (GJL)
* To be used preferable on driving side

Type PKZ (Z) – (Size 8 to 30)

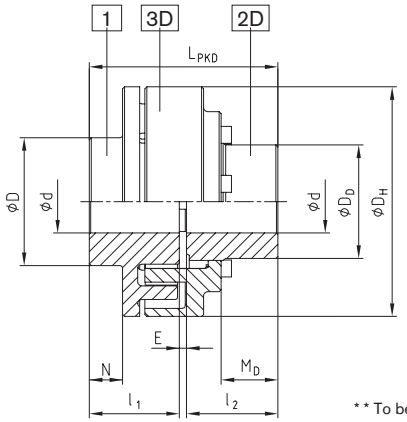

Components type PKD (D)
1 = Cam section * (GJL)
2D = Flange hub (steel)
3D = Cam ring (GJL)
* * To be used preferably on driving side

Type PKD (D) – (Size 15 to 35)

POLY Type PKZ and PKD

Size	Rated torque-[1] TKN [Nm]	Max. speed[2] n [rpm]	Max. finish bore Ød [mm]			Dimensions [mm]												Thread for setscrew			Weight[3] [kg]
			Part 1	Part 2Z	Teil 2D	D_H	D	D_Z	D_D	l_1; l_2	M_Z	M_D	N	E	D_2	D_4(H7/h7)	L_{PKZ}/L_{PKD}	G	t	T_A [Nm]	
8 (Z)	42	5000	20	28	—	86	43	50	—	35	25	—	3	3	—	—	73	M5	18	2	1,7
9 (Z)	72	5000	28	38	—	97	55	65	—	41	30	—	7	3	—	—	85	M8	23	10	2,7
10 (Z)	100	5000	32	42	—	107	60	70	—	45	35	—	10	4	—	—	94	M8	27	10	3,5
12 (Z)	170	5000	38	48	—	131	70	80	—	55	43	—	12	4	—	—	114	M8	30	10	5,4
14 (Z)	210	4800	45	55	—	142	80	93	—	60	46	—	17	4	—	—	124	M8	10	10	7,6
15 (Z;D)	320	4300	50	60	50	157	90	100	74,5	65	52	33	21	4	90	75	134	M8	15	10	8,6
17 (Z;D)	400	3800	60	65	60	176	100	110	87	70	56	43,5	26	4	106	90	144	M8	15	10	12
19 (Z;D)	660	3500	75	75	70	195	125	125	106	75	64	48	27	4	126	107	154	M8	15	10	18
20 (Z;D)	820	3300	65	75	70	205	115	127	104	80	65	45	23	4	123	105	164	M8	15	10	20
22 (Z)	1100	3000	85	85	—	224	140	140	—	90	75	—	38	4	—	—	184	M10	20	17	25
25 (Z;D)	1600	2700	90	90	95	257	150	150	138	100	84	67	43	5	162	140	205	M12	20	40	35
28 (Z;D)	2500	2350	100	100	110	288	165	165	158	110	90	65	44	5	178	160	225	M12	20	40	53
30 (Z;D)	3950	2200	110	110	110	308	180	180	165	130	108	89	58	5	202	170	265	M16	20	80	66
35 (D)	6100	1850	130	—	145	373	210	—	209	160	—	102	70	5	240	210	325	M16	25	80	125

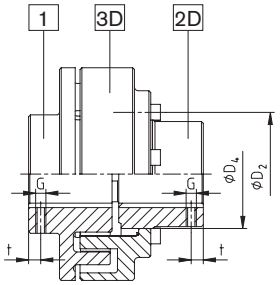

[1] Maximum torque T_{KMax} = T_{KN} x 2; standard material of elastomer: Perbunan (NBR) 92 Shore-A; standard material of hub: GJL
[2] Speeds for v = 30 m/sec. For circumferential speeds exceeding V = 30 m/s, dyn. we recommend dynamic balancing
[3] Referring to average bore

Ordering example:	POLY	PKD	28	d_1Ø90	d_2Ø80
	Coupling type	Type	Size	Finish bore part 1	Finish bore part 2

POLY PKA
Flexible couplings

Drop-out center design coupling



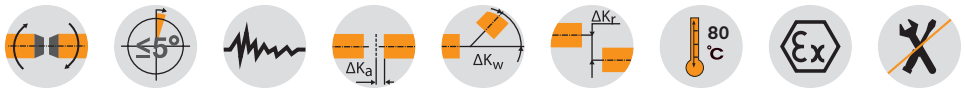

Components

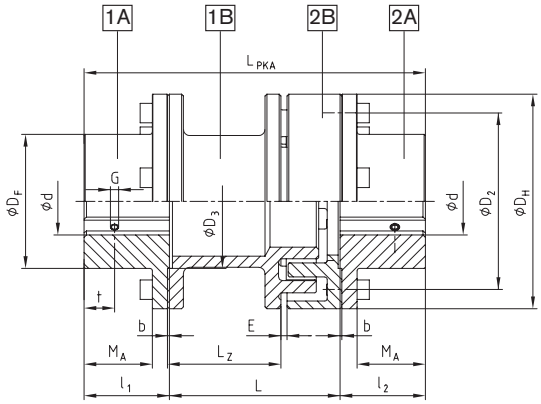

Components: Type PKA
1.A/2A = Coupling flange (steel)
1.B = Spacer (GJL)
2B = Driving flange (GJL)
1.A and 1B to be preferably used drive-sided

POLY Type PKA

Size	Rated torque T_{KN} [Nm]	Max. speed n [rpm]	Max. finish bore d [mm] part 1A/2A	Dimensions [mm]										Thread for setscrew			Weight [kg]
				D_H	D_F	D_2	D_3	l_1, l_2	b	M_A	E	L	L_{PKA}	L_Z	G	t	T_A [Nm]	
8	42	5000	38	86	55	70	60	35	1,5	25,5	3	100	170	66	M5	15	2	3,04
9	72	5000	45	97	70	85	70	41	1,5	30,5	3	100	182	63	M8	15	10	4,26
												140	222	103				4,66
10	100	5000	50	107	78	93	80	46	1,5	35,5	4	100	192	61	M8	20	10	5,42
												140	232	101				5,88
12	170	5000	60	131	95	113	90	55	1,5	43,0	4	100	210	55	M8	20	10	9,49
												140	250	95				10,15
14	210	4800	70	142	105	125	100	60	1,5	48,0	4	100	220	54	M8	25	10	11,46
												140	260	94				12,23
15	320	4300	70	157	110	135	110	65	1,5	49,5	4	140	270	93	M8	25	10	15,63
												180	310	133				16,50
17	400	3800	80	176	125	150	110	70	1,5	54,5	4	100	240	53	M8	25	10	18,79
												140	280	93				19,60
												180	320	133				20,41
20	820	3300	100	205	150	175	130	80	2,0	61,0	4	140	300	81	M8	30	10	30,96
												180	340	121				32,18
25	1600	2700	125	257	195	225	150	100	2,0	81,0	5	140	340	81	M12	40	40	54,73
												180	380	121				56,50
												250	450	191				59,60

Ordering example:

POLY	PKA	15	140	Ø38	Ø40
Coupling type	Type	Size	Drop-out center length	Finish bore part 1A	Finish bore part 2A

Displacements / elastomer sets / screws

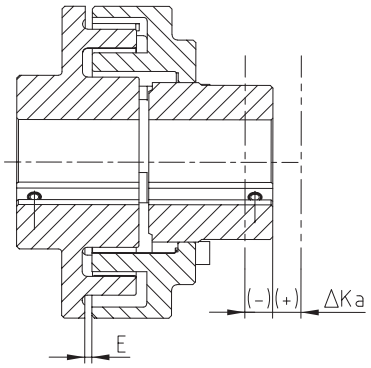

Axial displacement

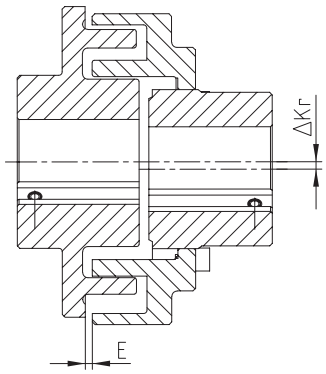

Radial displacement

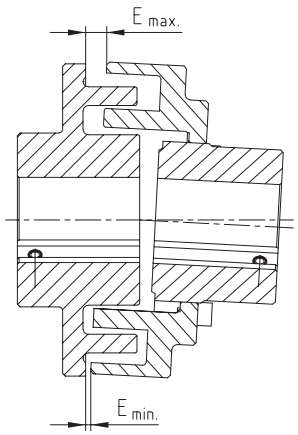

Angular displacement

$\Delta K_W = E_{max.} - E_{Min.}$ [mm]

Radial and angular displacements may occur simultaneously.
The combined sum V = ΔKr + (Emax. – Emin.) must not exceed the values listed in the table .

Displacements [mm]															
Coupling size		8	9	10	12	14	15	17	19	20	22	25	28	30	35
Max. axial displacement ΔKa [mm]		±1	±1	±1	±2	±2	±2	±2	±2	±2	±2	±2	±2	±2	±3
Max. radial displacement ΔKr	n=750 rpm	0,8	0,8	0,8	0,8	0,8	1,0	1,0	1,0	1,0	1,0	1,0	1,0	1,2	1,2
or max. angular displacement	n=1000 rpm	0,7	0,7	0,7	0,7	0,7	0,9	0,9	0,9	0,9	0,9	0,9	0,9	1,1	1,1
ΔKw or sum V	n=1500 rpm	0,5	0,5	0,5	0,5	0,5	0,7	0,7	0,7	0,7	0,7	0,7	0,7	0,7	0,9

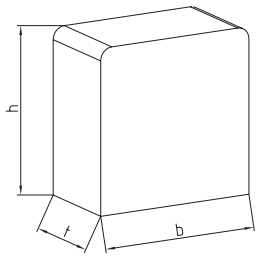

Elastomer sets NBR (building block)															
Coupling size		8	9	10	12	14	15	17	19	20	22	25	28	30	35
Set size		1			2		3		3a	4	3b	4Ü	5	6Ü	7Ü
Number of sets		8	10	10	10	10	12	12	12	12	16	16	16	16	20
Dimensions of	b	18,4			24,9		27,2		27,7	34,9	29,6	34,8	40	43,3	45,7
elastomer sets	t	10			15,3		16,1		18,4	19,6	18,4	20,1	22,2	28,6	25,0
b x t x h [mm]	h	18,9			23,9		24,6		26,8	34,6	29,6	35	40,6	41,1	60,0

Type PKD — Dimensions of cap screws DIN EN ISO 4762															
Coupling size		8	9	10	12	14	15	17	19	20	22	25	28	30	35
Screw size	M	—	—	—	—	—	M8	M8	M8	M10	M8	M10	M10	M12	M12
	l	—	—	—	—	—	30	25	25	30	30	30	40	40	55
No. z		—	—	—	—	—	6	6	6	6	8	8	8	8	10
Tightening torque TA [Nm]		—	—	—	—	—	25	25	25	49	25	49	49	86	86
Type PKA — Dimensions of cap screws DIN EN ISO 4762															
Screw size	M	M6	M6	M6	M8	M8	M10	M10	—	M10	—	M10	—	—	—
	l	16	18	18	20	20	25	25	—	30	—	30	—	—	—
No. z		4	5	5	5	5	6	6	—	6	—	8	—	—	—
Tightening torque T_A [Nm]		10	10	10	25	25	49	49	—	49	—	49	—	—	—

Standard bores H7 with feather keyway to DIN 6885 sheet 1 [JS9] and threads for setscrews.
Please see our detailed mounting instructions at our website www.ktr.com.

REVOLEX®
Flexible pin & bush coupling

Technical data

REVOLEX® KX-D Technical data											
Size	Torque [Nm] NBR 80 Sh-A			GJL		Steel		Dyn. torsion spring stiffness [Nm/rad]			
	Rated T_{KN}	Max. $T_{Kmax.}$	Vibratory T_{KW}	Max. speed [rpm] with V=35 m/s	Max. bore [mm]	Max. speed [rpm] with V=60 m/s	Max. bore [mm]	0.25xT_{KN}	0.50xT_{KN}	0.75xT_{KN}	1.00xT_{KN}
KX-D 75	3800	7600	1520	–	–	4500	90	$0{,}641x10^6$	$0{,}941x10^6$	$1{,}355x10^6$	$1{,}864x10^6$
KX-D 85	5000	10000	2000	–	–	4175	100	$0{,}834x10^6$	$1{,}224x10^6$	$1{,}763x10^6$	$2{,}425x10^6$
KX-D 95	6600	13200	2640	–	–	3845	110	$1{,}077x10^6$	$1{,}580x10^6$	$2{,}277x10^6$	$3{,}131x10^6$
KX-D 105	8650	17300	3460	2000	110	3475	120	$1{,}404x10^6$	$2{,}060x10^6$	$2{,}967x10^6$	$4{,}081x10^6$
KX-D 120	14110	28220	5640	1800	125	3100	140	$1{,}742x10^6$	$2{,}350x10^6$	$3{,}297x10^6$	$4{,}443x10^6$
KX-D 135	18690	37380	7476	1600	140	2725	160	$2{,}304x10^6$	$3{,}108x10^6$	$4{,}360x10^6$	$5{,}876x10^6$
KX-D 150	23100	46200	9240	1450	160	2500	185	$2{,}880x10^6$	$3{,}885x10^6$	$5{,}450x10^6$	$7{,}345x10^6$
KX-D 170	36900	73800	14760	1250	180	2150	220	$4{,}550x10^6$	$6{,}272x10^6$	$1{,}050x10^7$	$1{,}396x10^7$
KX-D 190	48210	96420	19284	1100	205	1900	245	$5{,}980x10^6$	$8{,}243x10^6$	$1{,}380x10^7$	$1{,}834x10^7$
KX-D 215	61900	123800	24760	1000	230	1725	275	$7{,}634x10^6$	$1{,}052x10^7$	$1{,}762x10^7$	$2{,}342x10^7$
KX-D 240	92030	184060	36812	900	250	1550	310	$1{,}101x10^7$	$2{,}350x10^7$	$3{,}613x10^7$	$4{,}861x10^7$
KX-D 265	121900	243800	48760	800	285	1375	350	$1{,}456x10^7$	$3{,}108x10^7$	$4{,}778x10^7$	$6{,}429x10^7$
KX-D 280	158800	317600	63520	720	315	1225	385	$1{,}896x10^7$	$4{,}047x10^7$	$6{,}221x10^7$	$8{,}371x10^7$
KX-D 305	191060	382120	76424	675	330	1150	405	$2{,}287x10^7$	$4{,}880x10^7$	$7{,}502x10^7$	$1{,}009x10^8$
KX-D 330	251200	502400	100480	625	355	1075	435	$3{,}001x10^7$	$6{,}403x10^7$	$9{,}843x10^7$	$1{,}324x10^8$
KX-D 355	300000	600000	120000	575	380	975	450	$3{,}572x10^7$	$7{,}622x10^7$	$1{,}172x10^8$	$1{,}577x10^8$
KX-D 370	400000	800000	160000	535	450	900	530	$4{,}518x10^7$	$9{,}640x10^7$	$1{,}482x10^8$	$1{,}994x10^8$
KX-D 470	510000	1020000	204000	–	–	855	520	$6{,}325x10^7$	$1{,}350x10^8$	$2{,}075x10^8$	$2{,}208x10^8$
KX-D 520	715000	1430000	286000	–	–	740	acc. to customer's request	$8{,}832x10^7$	$1{,}885x10^8$	$2{,}897x10^8$	$3{,}083x10^8$
KX-D 590	950000	1900000	380000	–	–	660		$1{,}177x10^8$	$2{,}5107x10^8$	$3{,}859x10^8$	$4{,}107x10^8$
KX-D 650	1220000	2440000	488000	–	–	590		$1{,}512x10^8$	$3{,}226x10^8$	$4{,}959x10^8$	$5{,}277x10^8$

If requested, coupling is dynamically balanced (semi-key balancing G 6.3 with speed on request of customer). For circumferential speeds exceeding V = 30 m/s, we would recommend dynamic balancing.

Axial displacement ΔKa

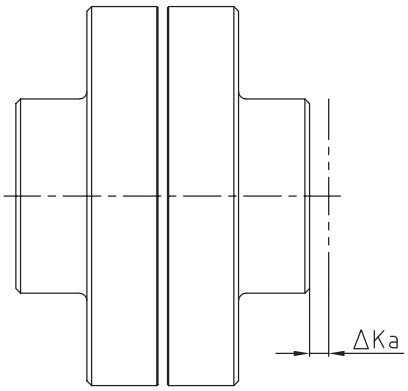

$L_{max./min} = L + \Delta K_a$ [mm]

Radial displacement ΔKr

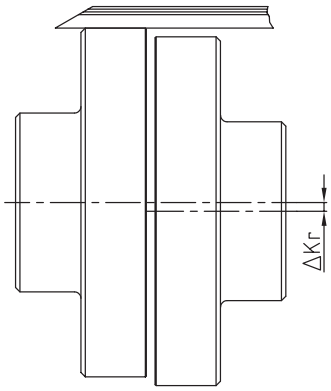

Angular displacement ΔKw

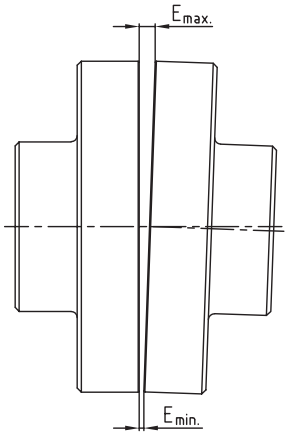

$\Delta K_w = E_{max.} - E_{Min.}$ [mm]

Displacements																						
Size (KX and KX-D)		75	85	95	105	120	135	150	170	190	215	240	265	280	305	330	355	370	470	520	590	650
Max. axial displacements ΔK_a [mm]		±1,5	±1,5	±1,5	±2	±2	±2	±2	±2,5	±2,5	±2,5	±2,5	±2,5	±2,5	±2,5	±4	±4	±4	±4	±4	±4	±4
Max. radial displacement ΔK_r [mm] or max. angular displacements ΔK_w [mm] with speed n	250 rpm	0,95	1,1	1,1	1,2	1,3	1,4	1,5	1,7	1,9	2,0	2,2	2,5	2,7	2,9	3,1	3,3	3,5	3,8	4,4	4,9	5,4
	500 rpm	0,70	0,80	0,80	0,9	0,9	1,0	1,1	1,2	1,3	1,4	1,6	1,7	1,9	2,0	2,2	2,3	2,5	2,8	3,1	3,5	3,8
	750 rpm	0,60	0,65	0,65	0,7	0,8	0,8	0,9	1,0	1,1	1,2	1,3	1,4	1,6	1,7	1,8	1,9	2,0	2,2	2,4	–	–
	1000 rpm	0,50	0,55	0,55	0,6	0,7	0,7	0,8	0,9	0,9	1,0	1,1	1,2	1,4	1,4	1,5	1,7	1,8	–	–	–	–
	1500 rpm	0,40	0,45	0,45	0,5	0,5	0,6	0,6	0,7	0,8	0,8	0,9	1,0	–	–	–	–	–	–	–	–	–
	2000 rpm	0,35	0,40	0,40	0,4	0,5	0,5	0,5	0,6	0,7	–	–	–	–	–	–	–	–	–	–	–	–
	3000 rpm	0,30	0,35	0,35	0,4	0,4	–	–	–	–	–	–	–	–	–	–	–	–	–	–	–	–

Assembly instructions
The above-mentioned permissible displacement figures of the flexible REVOLEX® KX couplings are standard values, considering the coupling load up to the rated torque T_{KN} of the coupling and an ambient temperature of + 30 °C. Care should be taken to maintain the distance dimension E accurately in order to allow for axial clearance of the coupling while in operation. See KTR mounting instructions, KTR standard 49410 at our homepage www.ktr.com.

REVOLEX® KX-D
Flexible pin & bush coupling

Casted material



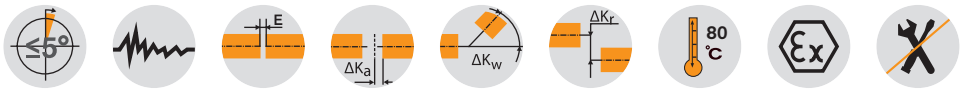

Components

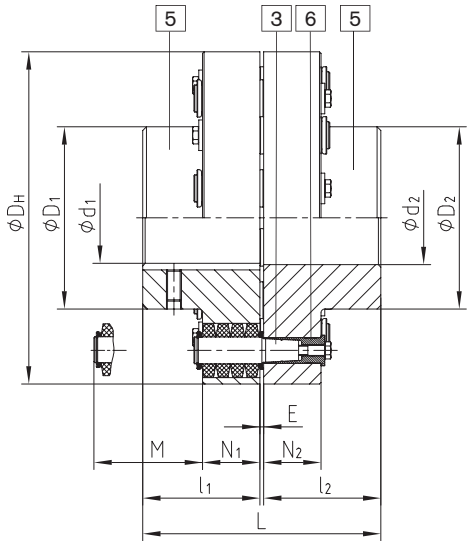

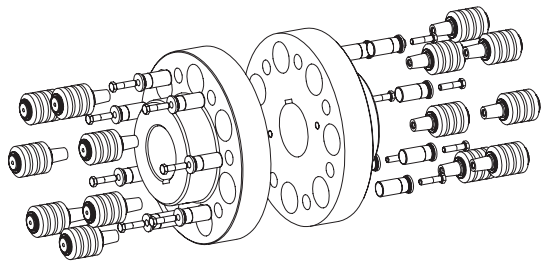

Components type KX-D
5 = Hub part 5
3 = Pins complete
6 = KX-D sleeve (hardened and corrosion-resistant)

REVOLEX® Type KX-D

Size	Torque [1] [Nm]		Max. speed [2] [rpm]	Finish bore [min. - max.]	Dimensions [mm]							Mass moments of inertia [3] [kgm²]	Approx. weight [3] [kg]
	T_{KN}	$T_{Kmax.}$		$d_1; d_2$	L	$l_1; l_2$	E	D_H	$D_1; D_2$	$N_1; N_2$	M*		
KX-D 105	8650	17300	2000	34-110	237	117	3	330	180	56	76	0,907	68
KX-D 120	14110	28220	1800	50-125	270	132	6	370	206	76	100	1,867	108
KX-D 135	18690	37380	1600	70-140	300	147	6	419	230	76	100	3,144	145
KX-D 150	23100	46200	1450	82-160	336	165	6	457	256	76	100	4,573	180
KX-D 170	36900	73800	1250	95-180	382	188	6	533	292	92	130	10,259	291
KX-D 190	48210	96420	1100	110-205	428	211	6	597	330	92	130	16,601	385
KX-D 215	61900	123800	1000	125-230	480	237	6	660	368	92	130	25,495	498
KX-D 240	92030	184060	900	140-250	534	264	6	737	407	122	170	50,147	760
KX-D 265	121900	243800	800	160-285	590	292	6	826	457	122	170	80,796	997
KX-D 280	158800	317600	720	180-315	628	311	6	927	508	122	170	129,979	1301
KX-D 305	191060	382120	675	180-330	654	324	6	991	533	122	170	170,016	1509
KX-D 330	251200	502400	625	200-355	666	330	6	1067	572	122	170	227,451	1755
KX-D 355	300000	600000	575	225-450	721	356	9	1156	610	164	220	415,259	2263
KX-D 370	400000	800000	535	225-530	773	382	9	1250	720	164	220	586,686	2701

* Drop-out center dimension
[1] Standard material NBR 80 Shore-A, please observe selection on page 14 et seqq.
[2] Higher speeds on request.
[3] Relating to max. bore
Finish bore acc. to ISO fit H7, feather keyway acc. to DIN 6885 sheet 1 - JS9.
If requested, coupling is dynamically balanced (semi-key balancing G 6.3 with speed on request of customer). For circumferential speeds exceeding V = 30 m/s, we would recommend dynamic balancing.
= pre-bored available from stock

Ordering example:	REVOLEX® KX-D 170	GJL	Ø120	Ø150
	Size and type of coupling	Material	Finish bore	Finish bore

REVOLEX® KX-D
Flexible pin & bush coupling

Material steel

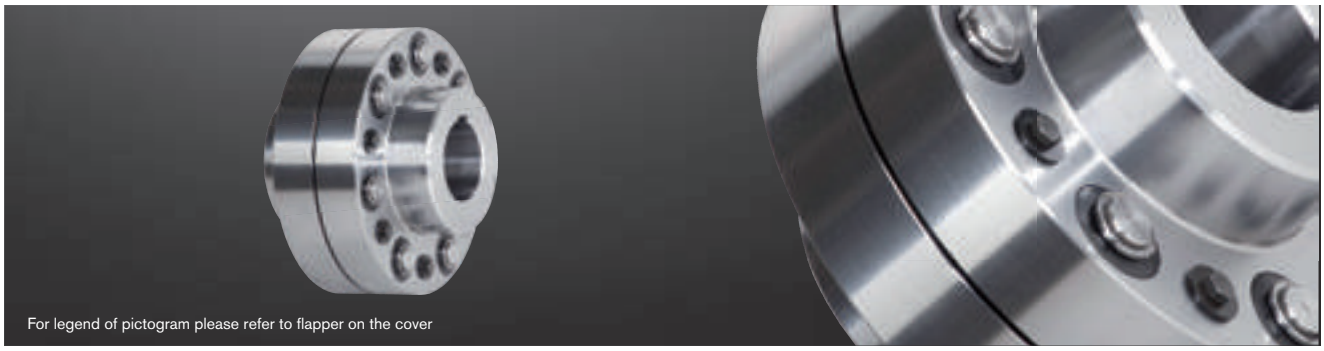

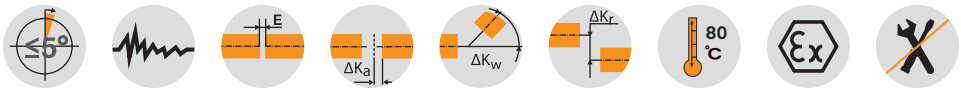

Components

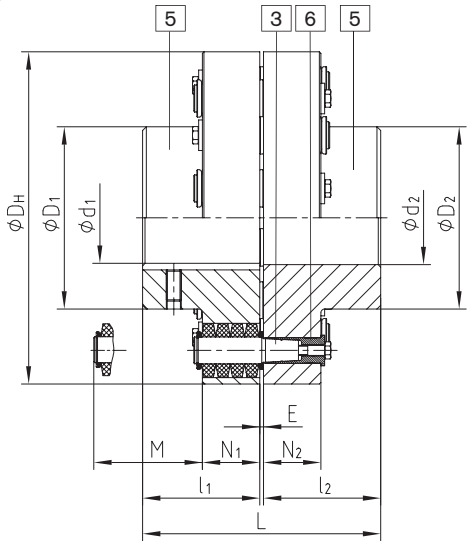

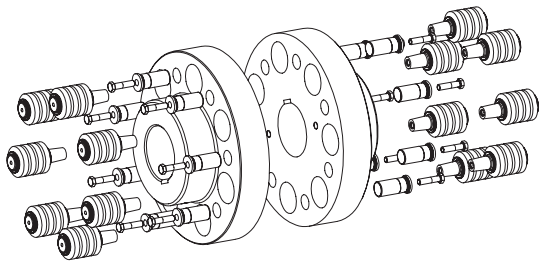

Components
Type KX-D
5 = Hub part 5
3 = Pins complete
6 = KX-D sleeve (hardened and corrosion-resistant)

REVOLEX® Type KX-D

Size	Torque [1] [Nm]		Max. speed [2] [rpm]	Finish bore [min. - max.]	Dimensions [mm]							Mass moments of inertia [3] [kgm²]	Approx. weight [3] [kg]
	TKN	TKmax.		d1; d2	L	l1; l2	E	DH	D1; D2	N1; N2	M*		
KX-D 75	3800	7600	4500	0-90	193	95	3	255	136	56	76	0,325	39
KX-D 85	5000	10000	4175	0-100	213	105	3	274	152	56	76	0,440	46
KX-D 95	6600	13200	3825	0-110	227	112	3	298	168	56	76	0,624	56
KX-D 105	8650	17300	3475	0-120	237	117	3	330	180	56	76	0,907	80
KX-D 120	14110	28220	3100	0-140	270	132	6	370	206	76	100	1,867	124
KX-D 135	18690	37380	2725	70-160	300	147	6	419	230	76	100	3,144	165
KX-D 150	23100	46200	2500	82-185	336	165	6	457	256	76	100	4,573	205
KX-D 170	36900	73800	2150	95-220	382	188	6	533	292	92	130	10,259	322
KX-D 190	48210	96420	1900	110-245	428	211	6	597	330	92	130	16,601	431
KX-D 215	61900	123800	1725	125-275	480	237	6	660	368	92	130	25,495	559
KX-D 240	92030	184060	1550	140-310	534	264	6	737	407	122	170	50,147	833
KX-D 265	121900	243800	1375	160-350	590	292	6	826	457	122	170	80,796	1099
KX-D 280	158800	317600	1225	180-385	628	311	6	927	508	122	170	129,979	1436
KX-D 305	191060	382120	1150	180-405	654	324	6	991	533	122	170	170,016	1669
KX-D 330	251200	502400	1075	200-435	666	330	6	1067	572	122	170	227,451	1954
KX-D 355	300000	600000	975	225-450	721	356	9	1156	610	164	220	415,259	2451
KX-D 370	400000	800000	900	225-530	773	382	9	1250	720	164	220	584,686	2925
KX-D 470	510000	1020000	855	240-520	969 [4]	480 [4]	9	1340	705 [4]	164	220	785,489	3631
KX-D 520	715000	1430000	760	240-520 [4]	1089 [4]	540 [4]	9	1540	780 [4]	164	220	1264,725	5155
KX-D 590	950000	1900000	680	260-590 [4]	1212 [4]	600 [4]	12	1735	885 [4]	164	220	2081,885	6895
KX-D 650	1220000	2440000	610	280-650 [4]	1332 [4]	660 [4]	12	1935	975 [4]	164	220	3228,297	8893

* Drop-out center dimension
[1] Standard material NBR 80 Shore-A, for selection see page 14 et seqq. [2] Higher speeds on request. [3] Relating to max. bore [4] Variable according to customer's requests
Finish bore acc. to ISO fit H7, feather keyway acc. to DIN 6885 sheet 1 - JS9.
If requested, coupling is dynamically balanced (semi-key balancing G 6.3 with speed on request of customer). For circumferential speeds exceeding V = 30 m/s, we would recommend dyn. balancing.
= pre-bored available from stock

Ordering example:	REVOLEX® KX-D 170	Stahl	Ø120	Ø150
	Size and type of coupling	Material	Finish bore	Finish bore

REVOLEX® KX-D SB
Flexible pin & bush coupling

With brake disk

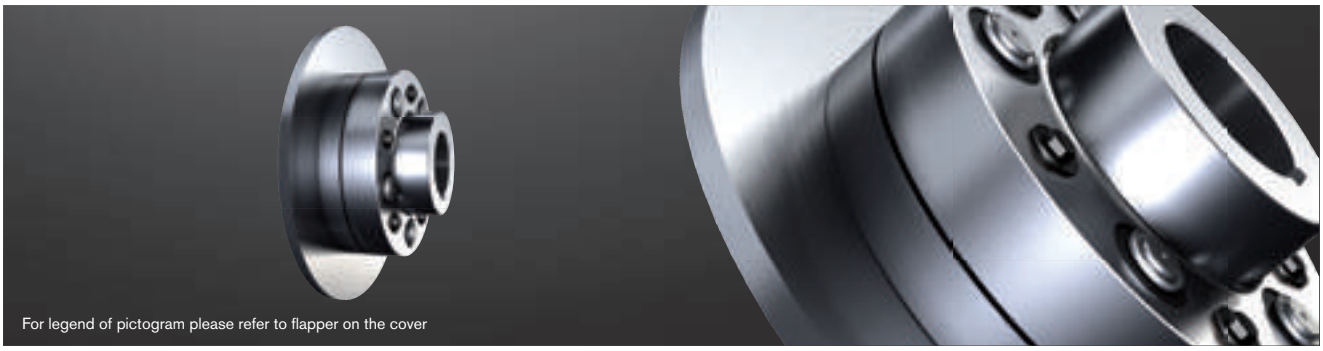

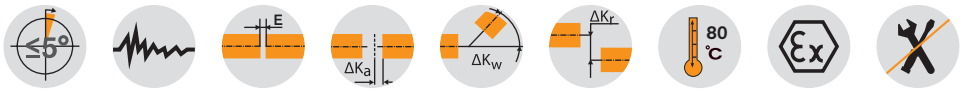

REVOLEX® KX-D Type SB													
Size	Torque [1] [Nm] KX-D		Finish bore KX-D [min. - max.]		Dimensions [mm]								
	TKN	$T_{Kmax.}$	GJL d_1; d_2	Steel d_1; d_2	L	l_1; l_2	E	D_H	D_1	N_1	N_2	N_3	M*
105	8650	17300	34-110	0-120	237	117	3	330	180	56	29	55	76
120	14110	28220	50-125	0-140	270	132	6	370	206	76	45	75	100
135	18690	37380	70-140	70-160	300	147	6	419	230	76	45	75	100
150	23100	46200	82-160	82-185	336	165	6	457	256	76	45	75	100
170	36900	73800	95-180	95-220	382	188	6	533	292	92	62	91	130
190	48210	96420	110-205	110-245	428	211	6	597	330	92	62	91	130
215	61900	123800	125-230	125-275	480	237	6	660	368	92	62	91	145
240	92030	184060	140-250	140-310	534	264	6	737	407	122	75	121	167

Selection of coupling/brake disk dimension “N”						
Size	Brake disk ØA x b[3]					
	Ø560x30	Ø630x30	Ø710x30	Ø800x30	Ø900x30	Ø1000x30
	KX-D	KX-D	KX-D	KX-D	KX-D	KX-D
105	47	47				
120	42	42				
135		57	57			
150			75	75		
170			82	82		
190				105	105	
215				131	131	131
240				128	128	128

* Drop-out center dimension
[1] Standard material NBR 80 Shore-A, for selection see page 14 et seqq. [2] Higher speeds on request.
[3] Maximum circumferential speed = 60 m/s referring to maximum outside diameter.
Finish bore according to ISO fit H7, feather keyway acc. to DIN 6885 sheet 1 - JS9.
If requested, coupling is dynamically balanced (semi-key balancing G 6.3 with speed on request of customer). For circumferential speeds exceeding 30 m/s (referring to outside diameter ØA) we would recommend dynamic balancing.

Ordering example:	REVOLEX® KX 170	SB	Ø710x30	1 - Ø120	2SB - Ø150
	Size and type of coupling	Type	Brake disk	Finish bore	Finish bore

Components

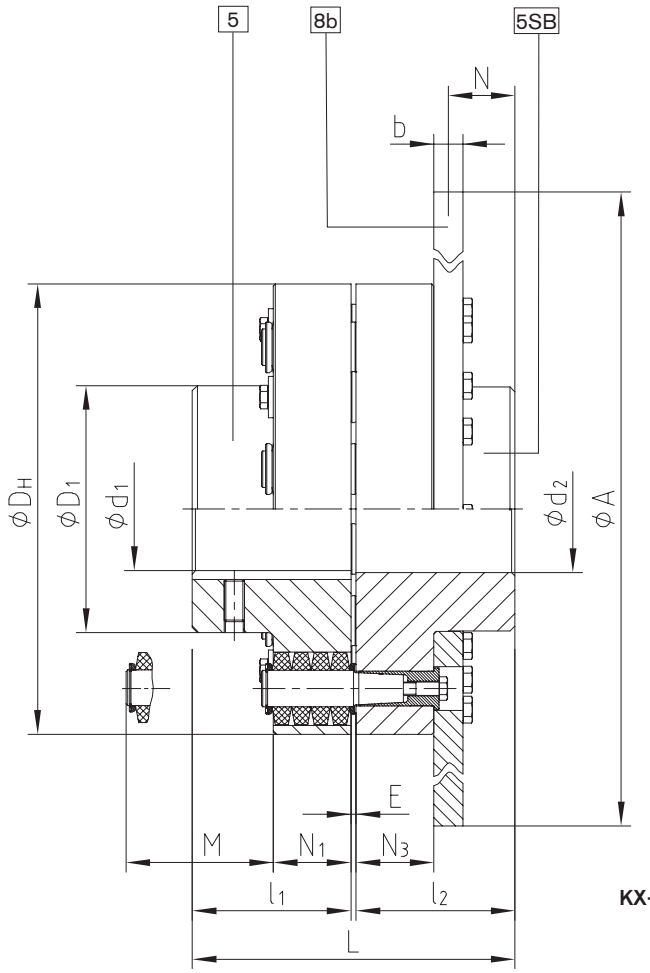

KX-D

Technical data of pins

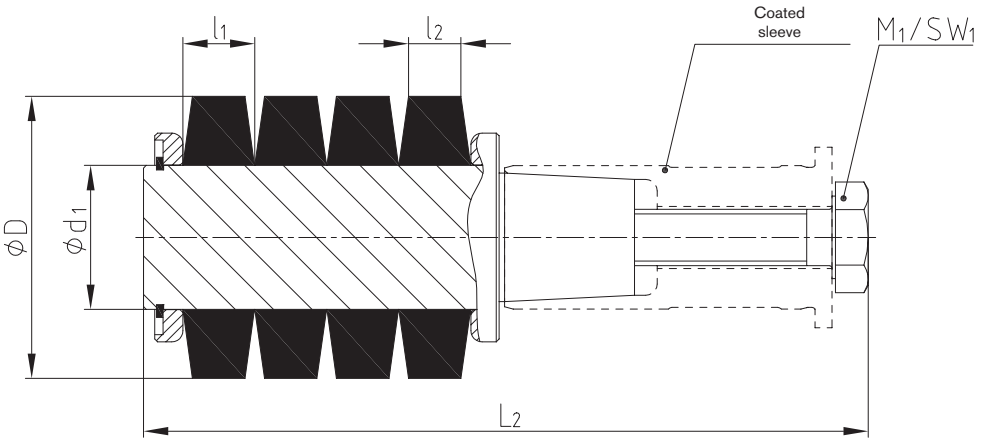

Taper pin design B

KX-D

Technical data											
Size	Pin		Component 3.2			Component 3.1b			Component 3.4b		Tightening torque T_A [Nm]
	Size	No. z	Elastomer ring NBR 80 Shore A			Pin			Screw DIN 931/933		
		KX-D	D	l_1	l_2	d_1	L_1	L_2	M_1	SW_1	
75	3	10									
85	3	12	50,0	12,7	9,0	25,40	103	129	M10	1617	67
95	3	14									
105	3	16									
120	4	14									
135	4	16	63,0	17,8	12,5	30,60	147,5	178	M12	1819	115
150	4	18									
170	5	14									
190	5	16	85,5	22,9	15,2	43,20	191	220	M16	24	290
215	5	18									
240	6	14									
265	6	16									
280	6	18	113,7	30,5	20,3	58,40	244	290	M24	36	970
305	6	20									
330	6	24									
355	7	16									
370	7	20	150	41	28	75	–	387	M30	46	1950
470	7	22									

General information on the elastomer rings			
Material	Perbunan (NBR)	Natural rubber (NR)	Perbunan (NBR)
Spider hardness	80 Shore-A	80 Shore-A	80 Shore-A
Permanent temperature range [°C]	- 30 to +80	- 50 to +70	- 30 to +80
Max. temperature (short-term) [°C]	- 50 to +120	–	–
Colour	black	black	blue
Operating range	STANDARD	Subzero temperatures	Electrically insulating and backlash-free, e. g. ropeway drives
			

Assembly/disassembly

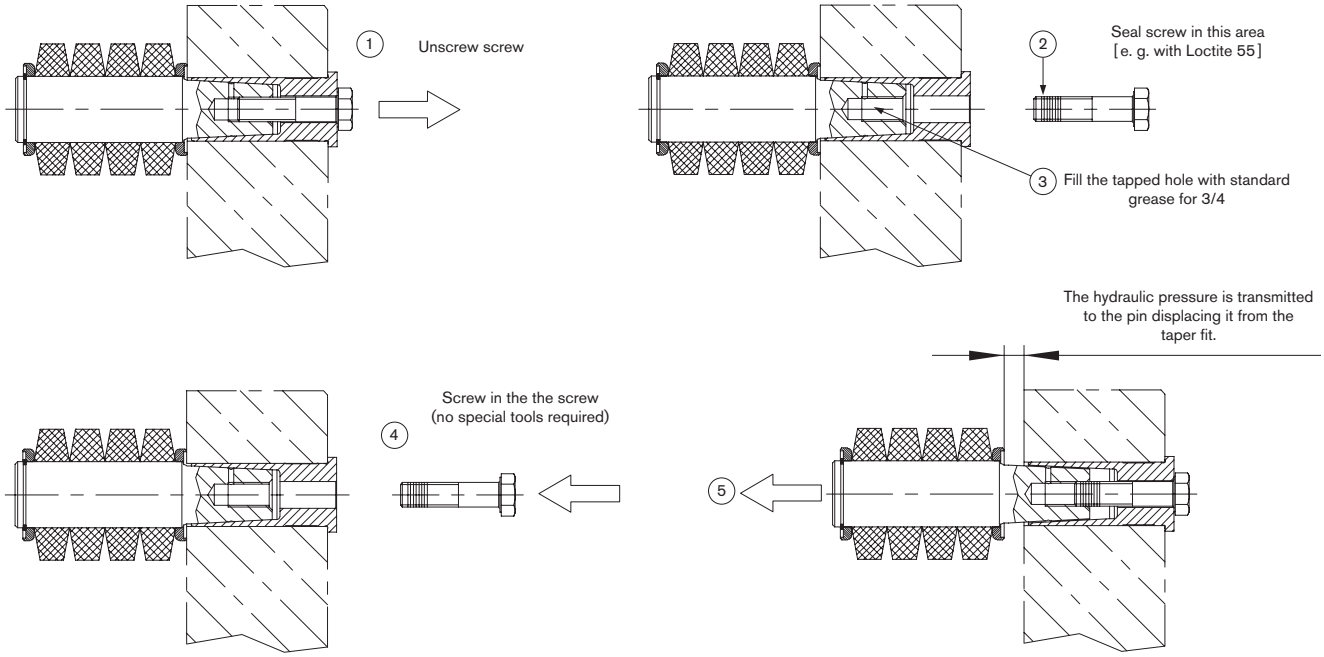

Other types

Type AB
with limited axial backlash

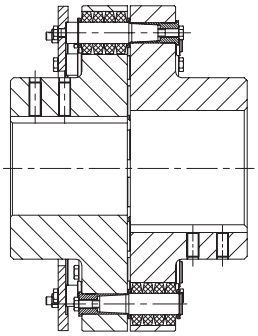

Intermediate shaft type with RADEX®-N

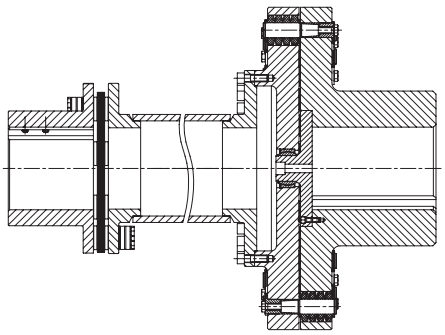

Backlash-free type

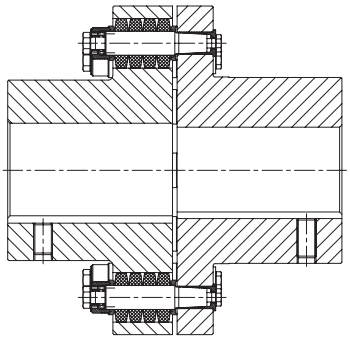

Type KX-D SD
shiftable with shiftable linkage

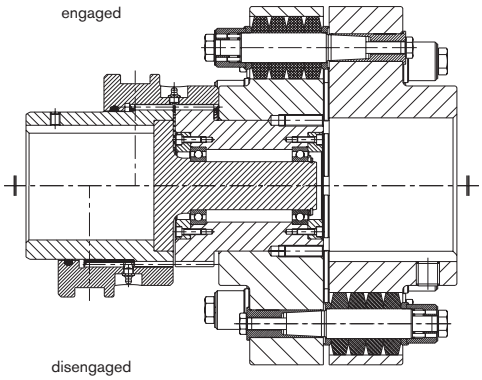

Type KX-D
with cardan shaft connection

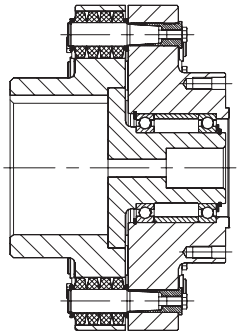



Gear couplings

Types and operating description 82

BoWex®
Technical data 84
Displacements 85
Cylindrical and taper bores and selection of standard IEC motors 86
Type junior and junior M plug-in couplings made of nylon 87
Type M, type I and type M…C with explosion protection 88
Type AS and type Spec.-I 89
Type SG, type SSR and type Spec.-I/CD 90
Type SD / SD-D 92
Type SD1 with slip ring and shiftable linkage 94
Type GT 96
Type ZR with a long PA sleeve 97
Type HEW Compact 98
Type M made of corrosion-resistant material 100
Taper bores 102
Spline hubs and inch bores 103

GEARex®
Type FA, FB and FAB 104
Type DA, DB and DAB 106
Type FH and DH 108
Type FR and DR 110
Displacements 112
Flange dimensions in accordance with AGMA 9008-B00 113

BoWex®



GEARex®



GEAR COUPLINGS
TYPES AND OPERATING DESCRIPTION

Properties of gear couplings

	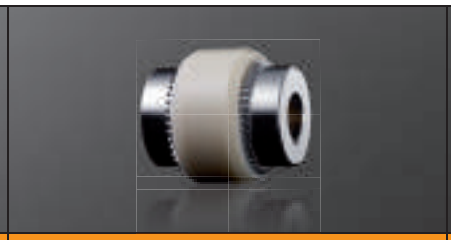	
Product	**BoWex®**	**GEARex®**
Type	Curved-tooth gear coupling®	All-steel gear coupling
Properties		
AGMA		●
Torsionally rigid	●	●
Damping vibrations	HEW Compact	
Maintenance-free	●	
Axial plug-in	●	
Compensating for misalignment	●	●
Failsafe		●
Not failsafe	●	
Electric insulation	●	O
Special features		
Variation	very high Extensive basic programme from stock with customized solutions also being available	average Extensive basic programme from stock with customized solutions also being available
Applications/core industries	Pump drives, general engineering & hydraulics, food industry,…	Heavy engineering, transport, logistics, cement industry, …
Torque range TKN [Nm]		
Max.	2.500	2.750.000
Speed range n [rpm]*		
Max.	14.000	8.500
Hub materials available		
Nylon	●	
Quality steel (C45)	size 65-125	up to size 85
Alloyed Q & T steel (42CrMo4)		from size 90
Powder metal steel » subject to mould	size 14-65	
Stainless steel	●	
Other special materials possible	●	●
Corrosion-protected types	O	O
Sleeve (standard and special)		
Material	Polyamide, polyamide with carbon fibre share, natural rubber	–
Elastomer	highly flexible	–
Temperature range [°C] min. / max.		
Standard	-25 / +100	-20 / + 80
Special	-50 / +120	-40 / +120

● ≈ Standard
O ≈ On request
* ≈ Depending on size

GEAR COUPLINGS
TYPES AND OPERATING DESCRIPTION

Product finder of gear couplings

	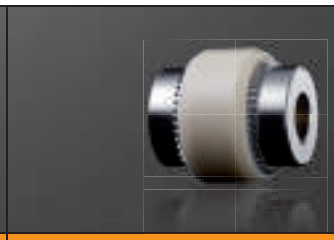	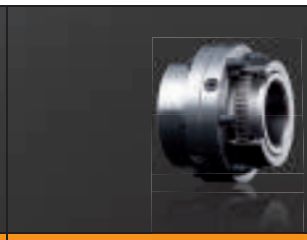
Product	**BoWex®**	**GEARex®**
Type	Curved-tooth gear coupling®	All-steel gear coupling
Geometries		
Design	compact	short / compact
Mass moment of inertia	low	average
Shaft distance dimension	very low	very low
Types (extract)		
Shiftable coupling type	SD, SD-1, SD-D, SD-D3	SD
Flange type	-	FA, FB, FAB, FH, FR
Cover type	-	DA, DB, DAB, DH, DR
Suitable for horizontal assembly	Standard	Standard
Suitable for vertical assembly	Standard	VD
Sleeve can be disassembled radially » with no need for displacing driving/driven side	GT	–
Intermediate shaft type » bridging larger shaft distances	Junior plug-in coupling, ZR	FH, DH
Single-cardanic	Junior plug-in coupling, HEW Compact	FR, DR
Double-cardanic » compensating for big displacements » lower restoring forces	Standard	Standard
Certifications/type examinations		
ATEX	●	●
DNV-GL	●	●
Bureau Vertias	●	
ABS		●
GOST R/ GOST TR	●	
Curved-tooth gear principle	●	●

● ≈ Standard

Details on spline

Hub with crowned spline (BoWex® and GEARex®)

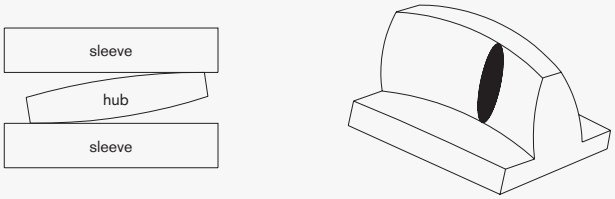

Hub with spur toothing

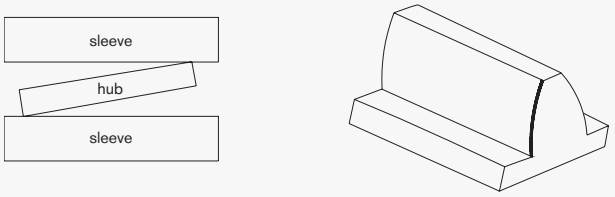

According to the operating principle of the well-known crowned gear, edge pressure in the spline is avoided with angular and radial displacements.

BoWex®:
The smooth and hard surface of the BoWex® sleeve (crystalline structure) and the high thermal stability and resistance to lubricants, fuels, hydraulic fluids, dissolvents, etc. make polyamide an ideal material for components stressed by sliding, particularly for the coupling production.

GEARex®:
In order to ensure a regular and controlled lubrication in assembled condition, two connections for hydraulics are arranged opposite to each other radially on each coupling sleeve. As a result a complete GEARex® coupling has four connections being offset to each other by 90°.

Technical data

Power, Torque and Speed							
Type and size		Power P [kW] / n [rpm]		Torque T_K [Nm]			Max. speed [1/min]
		Rated	Max.	T_{KN}	$T_{K\,max.}$	T_{KW}	
Type plug-in coupling / junior M	junior 14 / M-14	0,0005	0,010	5	10	2,5	6000
	junior 19 / M-19	0,0008	0,0017	8	16	4	6000
	junior 24 / M-24	0,0013	0,0025	12	24	6	6000
Type M I AS Spez.-I SG SSR	14	0,0010	0,003	10	30	5	14000
	19	0,0017	0,005	16	48	8	11800
	24	0,0021	0,006	20	60	10	10600
	28	0,0047	0,014	45	135	23	8500
	32	0,0063	0,019	60	180	30	7500
	38	0,0084	0,025	80	240	40	6700
	42	0,010	0,031	100	300	50	6000
	45 / 48	0,015	0,044	140	420	70	5600
	65	0,040	0,119	380	1140	190	4000
	80	0,073	0,22	700	2100	350	3150
	100	0,13	0,38	1200	3600	600	3000
	125	0,26	0,78	2500	7500	1250	2120
Type M...C GT	14	0,0015	0,0047	15	45	7,5	14000
	19	0,0025	0,0075	24	72	12	11800
	24	0,003	0,009	30	90	15	10600
	28	0,007	0,022	70	210	35	8500
	32	0,009	0,028	90	270	45	7500
	38	0,013	0,038	120	360	60	6700
	48	0,021	0,063	200	600	100	5600
	65	0,058	0,18	560	1680	280	4000
	80	0,105	0,311	1000	3000	500	3150
type HEW Compact	T50 Sh	0,0168	0,0503	150	450	45	7300
	42-130 T65 Sh	0,0188	0,0565	180	540	54	7300
	T70 Sh	0,0220	0,0660	210	630	63	7300
	T50 Sh	0,0419	0,1257	400	1200	120	5500
	65-180 T65 Sh	0,0524	0,1571	500	1500	150	5500
	T70 Sh	0,0602	0,1806	575	1725	172	5500
	T50 Sh	0,0916	0,2749	900	2700	270	4400
	80-225 T65 Sh	0,1152	0,3455	1100	3300	330	4400
	T70 Sh	0,1361	0,4084	1300	3900	390	600
	T50 Sh	0,2199	0,6597	2000	6000	600	3200
	100-305 T65 Sh	0,2723	0,8168	2600	7800	780	3200
	T70 Sh	0,3141	0,9424	3000	9000	900	3200
	T40 Sh	0,3141	0,9424	3000	9000	900	2900
	125-365 T50 Sh	0,4188	1,2565	4000	12000	1200	2900
	T65 Sh	0,5236	1,5707	5000	15000	1500	2900

Thread for setscrew

(Thread dimensions for fixing screws. BoWex® coupling hubs with cylindrical bore)

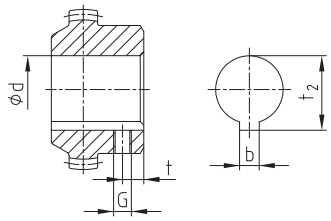

Position of the thread for setscrews
BoWex® M-14 to M-24 opposite to the keyway

BoWex® M-28 to I-125 on the keyway

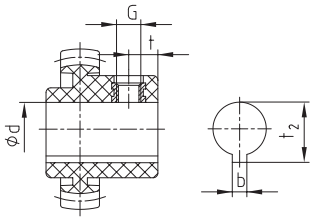

Position of thread withi BoWex® junior plug-in coupling and junior M coupling

BoWex® – Kupplungsnaben							
Size Dimensions	14 19 24	28 32 38	42 45 48	65	80	100	125
Thread G	M5	M8		M10	M10	M12	M16
Distance t	6	10		15 [1] 20	20	30	40
Tightening torque T_A [Nm]	2	10		17	17	40	80

BoWex® junior – Kupplungsnaben			
Size Dimensions	14	19	24
Thread G	M5	M5	M5
Hub 1b - Distance t	6	6	6
Plug-in sleeve 2b - Distance t	8	10	10
Tightening torque T_A [Nm]	1,4	1,4	1,4

[1] Length of hub 55 mm t = 15 mm, 70 mm t = 20 mm

Displacements

BoWex® couplings are double- cardanic and in addition to transmitting the power compensate for axial, radial and angular shaft displacements in a way to prevent damages from the driving or driven machine, respectively.

Axial displacement

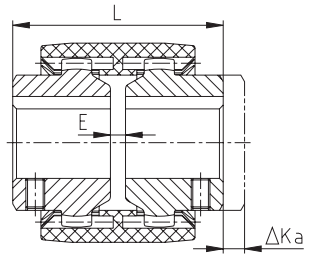

Radial displacement

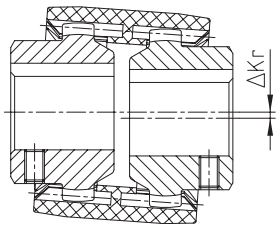

Angular displacement

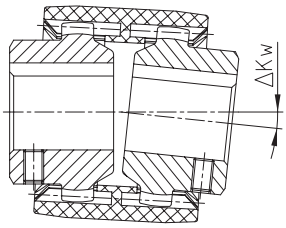

Radial- and angular displacement

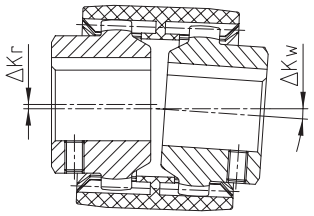

Displacements – type junior couplings						
BoWex® size	Type junior plug-in coupling			Type junior M		
	14	19	24	14	19	24
Max. axial displacement ΔKa [mm]	± 1	± 1	± 1	± 1	± 1	± 1
Max. radial displacement with n=1500 rpm ΔKr [mm]	± 0,1	± 0,1	± 0,1	± 0,3	± 0,3	± 0,4
Max. radial displacement with n=3000 rpm ΔKr [mm]	± 0,1	± 0,1	± 0,1	± 0,3	± 0,3	± 0,4
Max. angular displacement with n=1500 rpm ΔKw [degree]	± 1,0	± 1,0	± 0,9	± 1,0	± 1,0	± 0,9
Max. angular displacement with n=3000 rpm ΔKw [degree]	± 0,7	± 0,7	± 0,6	± 0,7	± 0,7	± 0,6

Displacements – type M, I, AS, Spec.-I, SG and SSR												
BoWex® size	14	19	24	28	32	38	42	48	65	80	100	125
Max. axial displacement ΔKa [mm]	± 1	± 1	± 1	± 1	± 1	± 1	± 1	± 1	± 1	± 1	± 1	± 1
Max. radial displacement with n=1500 rpm ΔKr [mm]	± 0,30	± 0,30	± 0,35	± 0,35	± 0,35	± 0,40	± 0,40	± 0,40	± 0,45	± 0,45	± 0,45	± 0,45
Max. radial displacement with n=3000 rpm ΔKr [mm]	± 0,20	± 0,20	± 0,23	± 0,23	± 0,23	± 0,25	± 0,25	± 0,25	± 0,28	± 0,28	± 0,28	± 0,28
Max. angular displacement with n=1500 rpm ΔDKw [degree]	± 1,0	± 1,0	± 0,9	± 0,9	± 0,9	± 0,9	± 0,9	± 0,9	± 0,7	± 0,6	± 0,6	± 0,4
Max. angular displacement with n=3000 rpm ΔKw [degree]	± 0,7	± 0,7	± 0,6	± 0,6	± 0,6	± 0,6	± 0,6	± 0,6	± 0,5	± 0,4	± 0,4	± 0,3

	Displacements – Type GT				Displacements – Type HEW Compact													
BoWex® size	28	38	48	65	42-130			65-180			80-225			100-305			125-365	
					T50	T65	T70	T50	T65	T70	T50	T65	T70	T50	T65	T70	T40	T52	T65
Max. axial displacement ΔKa [mm]	± 1	± 1	± 1	± 1	± 2			± 2			± 2			± 2			± 2		
Max. radial displacement with n=1500 rpm ΔKr [mm]	± 1	± 1	± 1,4	± 1,4	±1,1	±1	±0,5	±1,6	±1,5	±0,7	±1,8	±1,7	±2,2	±2,2	±2	±1	±2,5	±2,3	±1,1
Max. radial displacement with n=3000 rpm ΔKr [mm]	± 0,6	± 0,6	± 1	± 1	±0,55	±0,5	±0,25	±0,8	±0,75	±0,35	±0,9	±0,85	±1,1	±1,1	±1	±0,5	±1,25	±1,15	±0,55
Max. angular displacement with n= 1500 RPM ΔKw [degree]	± 1	± 1	± 0,9	± 0,9	±1	±0,75	±0,5	±1	±0,75	±0,5	±1	±0,75	±1	±1	±0,75	±0,5	±1	±0,75	±0,5
Max. angular displacement with n= 3000 RPM ΔKw [degree]	± 0,7	± 0,7	± 0,6	± 0,6	±0,5	±0,4	±0,25	±0,5	±0,4	±0,25	±0,5	±0,4	±0,25	±0,5	±0,25	±0,25	±0,5	±0,4	±0,25

The above-mentioned figures of displacement of BoWex® couplings are standard values taking into account the load of the coupling up to the rated torque TKN. With different operating conditions please order our data sheet for displacements of BoWex® KTR-N 20140.
The displacement figures may only be used one by one - if they appear simultaneously, they must be limited in proportion. With assembly of the coupling please make sure that the distance dimension E is accurately adhered to keep the coupling movable when in operation. Please see our detailed mounting instruction at our homepage (www.ktr.com),

Cylindrical bores, taper/inch bores see selection of IEC standard motors

Stock programme cylindrical finish bore [mm] H7 feather keyway to DIN 6885 sheet 1 [JS9] with thread for setscrew

BoWex® Size	un-/bored	Ø8	Ø10	Ø11	Ø12	Ø14	Ø15	Ø16	Ø17	Ø18	Ø19	Ø20	Ø22	Ø24	Ø25	Ø28	Ø30	Ø32	Ø35	Ø38	Ø40	Ø42	Ø45	Ø48	Ø50	Ø55	Ø60	Ø65	Ø70	Ø75
14	●■	●	●	●	●	●	●																							
19	●■		●	●	●	●	●	●	●	●	●■	●																		
24	●■		●	●	●	●■	●	●	●	●	●■	●■	●	●■	●															
28	●■				●	●	●	●	●	●	●	●	●	●	●	●■															
32	●■							●		●	●	●	●	●	●	●	●	●													
38	●■							●		●	●	●	●	●	●	●	●	●	●	●■											
42	●■									●	●	●	●	●	●	●	●	●	●	●	●	●									
48	●■											●			●	●	●	●	●	●	●	●■	●	●■							
65	●■																●■	●	●■	●	●■	●■	●■	●■	●■	●■	●■	●■	●■		
80	●																						●		●	●	●	●	●	●	●

● Standard length ■ Standard lengthened

Stock programme taper and inch bores

	Taper 1:5					Taper 1:8					Inch bores								
Code d +0,05 b JS9 t +0,2	**A-10** 9,85 2	**B-17** 16,85 3	**C-20** 19,85 4	**D-25** 24,85 5	**E-30** 29,85 6	**N/1** 9,7 2,4	**N1d** 14 3	**N/2** 17,28 3,2	**N/2a** 17,28 4	**N/3** 22 3,99	**Ta** 12,7 3,17 14,3	**DNC** 13,45 3,17 14,9	**Ed** 15,87 4,75 18,1	**A** 19,05 4,78 21,3	**G** 22,22 4,75 24,7	**F** 22,22 6,38 25,2	**Bs** 25,38 6,37 28,3	**Hs** 25,4 6,35 28,7	**K** 31,75 7,93 35,4
14	●					●							●						
19		●				●							●						
24	●	●				●		●	●		●			●	●				
28	●	●				●	●	●	●	●				●					
32		●																●	
38		●						●	●					●					
42		●		●				●	●	●				●		●	●		
48																			
65																			●

Further dimensions on request.

BoWex® couplings for standard IEC motors, protection class IP 54/IP 55

Rotary current motor Size	Motor output with 50 Hz n = 3000 [rpm]			Motor output with 50 Hz n = 1500 [rpm]			Motor output with 50 Hz n = 1000 [rpm]			Cylindrical shaft ends d x l [mm]	
	kW	T [Nm]	BoWex® coupling	kW	T [Nm]	BoWex® coupling	kW	T [Nm]	BoWex® coupling	3000 ≤ 1500	
56	0,09	0,32		0,06	0,43		0,037	0,43		9 x 20	
	0,12	0,41		0,09	0,64		0,045	0,52			
63	0,18	0,62	14	0,12	0,88	14	0,06	0,72	14	11 x 23	
	0,25	0,86		0,18	1,3		0,09	1,1			
71	0,37	1,3		0,25	1,8		0,18	2,0		14 x 30	
	0,55	1,9		0,37	2,5		0,25	2,7			
80	0,75	2,5	19	0,55	3,7	19	0,37	3,9	19	19 x 40	
	1,1	3,7		0,75	5,1		0,55	5,8			
90 S	1,5	5,0	24	1,1	7,5	24	0,75	8,0	24	24 x 50	
90 L	2,2	7,4		1,5	10		1,1	12			
100 L	3	9,8	28	2,2	15	28	1,5	15	28	28 x 60	
				3	20						
112 M	4	13		4	27		2,2	22			
132 S	5,5	18	38	5,5	36	38	3	30	38	38 x 80	
	7,5	25									
132 M				7,5	49		4	40			
							5,5	55			
160 M	11	36	42	11	72	42	7,5	75	42	42 x 110	
	15	49									
160 L	18,5	60		15	98		11	108			
180 M	22	71	48	18,5	121	48			48	48 x 110	
180 L				22	144		15	148			
200 L	30	97		30	196		18,5	181		55 x 110	
	37	120					22	215			
225 S				37	240	65			65	55 x 110	60 x 140
225 M	45	145	65	45	292		30	293			
250 M	55	177		55	356		37	361		60 x 140	65 x 140
280 S	75	241		75	484		45	438			75 x 140
280 M	90	289		90	581	80	55	535	80		
315 S	110	353		110	707		75	727			
315 M	132	423		132	849		90	873			80 x 170
315 L	160	513	80	160	1030	100	110	1070	100	65 x 140	
	200	641		200	1290		132	1280			
							160	1550			
315	250	801		250	1610		200	1930	125		85 x 170
	315	1010	100	315	2020	125	250	2420			
355	355	1140		355	2280		315	3040	-	75 x 140	95 x 170
	400	1280	125	400	2560						

^Torque T = rated torque according to Siemens catalogue.

BoWex® junior and junior M
Bogenzahn-Kupplung®

Plug-in coupling made of nylon (two-part and three-part)



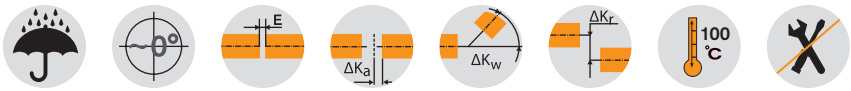

Components

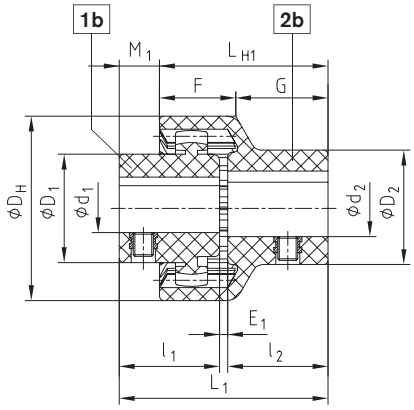

Type junior plug-in coupling (two-part)

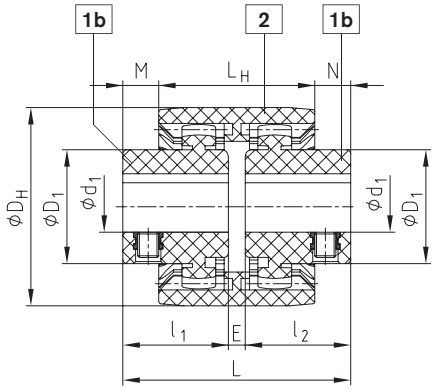

Type junior M coupling three-part)

BoWex® junior plug-in coupling (two-part) and BoWex® junior M (three-part)																			
Size	Torque TK [Nm]		Finish bore				Dimensions [mm]												Max. speed [rpm]
			Hub part 1b[1]		Plug-in sleeve Part 2b[1]		D_H	l_1, l_2	E_1	L_1	L_{H1}	M_1	F	G	E	L	L_H	M, N	
	T_{KN}	$T_{K\,max.}$	d_1	D_1[1]	d_2	D_2[1]													
14 M-14	5	10	Ø6, Ø7, Ø8, Ø9	22	Ø8	22	40	23	2	48	40	8	18,5	21,5	4	50	37	6,5	6000
			Ø10, Ø11	25	Ø10, Ø11	25													
			Ø12, Ø14	26	Ø12, Ø14	26													
19 M-19	8	16	Ø12, Ø14	27	Ø14, Ø15	29	47	25	2	52	42	10	19,0	23,0	4	54	37	8,5	6000
			Ø16	30															
			Ø19	32	Ø19	35													
24 M-24	12	24	Ø10, Ø11, Ø12	26	Ø14, Ø16	32	53	26	2	54	45	9	21,5	23,5	4	56	41	7,5	6000
			Ø14, Ø15, Ø16	32															
			Ø18, Ø19, Ø20	36	Ø19, Ø20	36													
			Ø24	38	Ø24	40													

[1] Finish bore with tolerance +0,05 / -0,1, keyway +-0,08

Ordering example:	BoWex® junior 19	d_1 Ø19	d_2 Ø14
	Coupling size two-part type or BoWex® junior M-19 three-part type	Finish bore	Finish bore

BoWex® M, I and M...C
Curved-tooth gear coupling®

Compact and maintenance-free

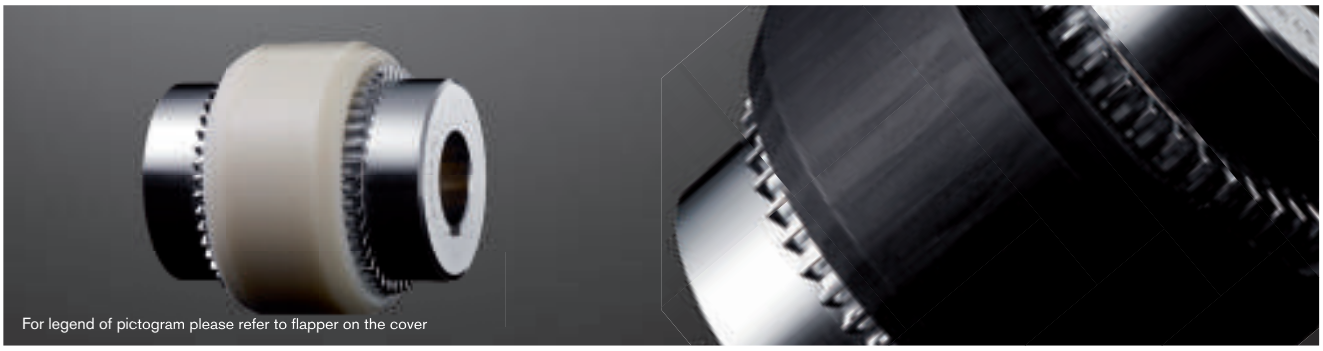

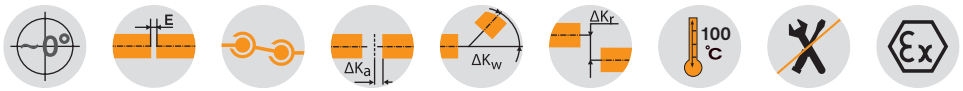

Components

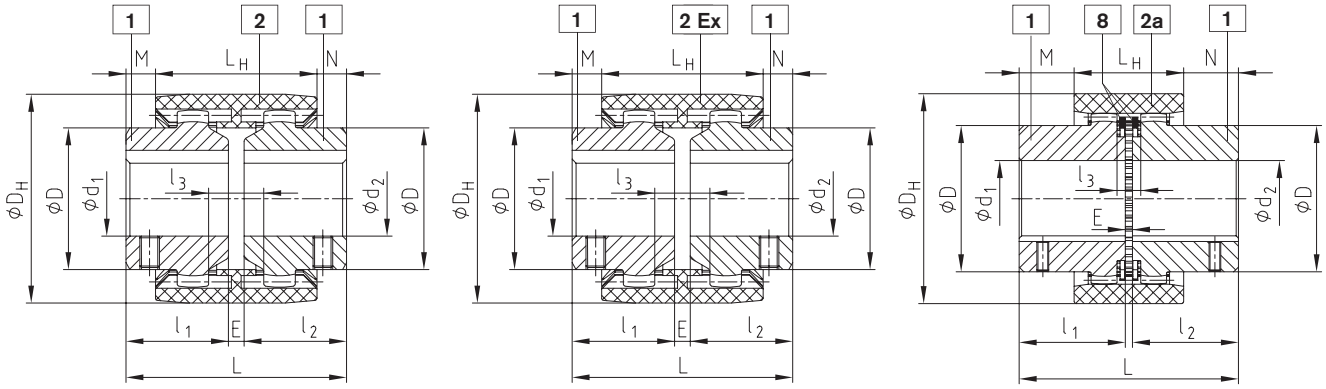

Type M | Type M...C | Type I

BoWex® type M, type I and type M...C

Size		Finish bore d1, d2		Dimensions [mm]											Weight with max. bore Ø			Mass moment of inertia J with max. bore Ø		
White sleeve	Black sleeve	Pilot bored	max.	l_1, l_2	E	L	L_H	M, N	l_3	D	D_H	Tip circle Ø DZ hub	Number of teeth	Hub length. l_1, l_2 max.	Sleeve [kg]	Hub [kg]	Total [kg]	Sleeve [kgcm2]	Hub [kgcm2]	Total [kgcm2]
M-14	M-14C	-	15	23	4	50	37	6,5	10	25	40	33	20	40	0,03	0,07	0,10	0,08	0,09	0,26
M-19	M-19C	-	20	25	4	54	37	8,5	10	32	47	39	24	40	0,03	0,10	0,23	0,15	0,16	0,47
M-24	M-24C	-	24	26	4	56	41	7,5	14	36	53	45	28	50	0,04	0,14	0,32	0,21	0,36	0,93
M-28	M-28C	-	28	40	4	84	46	19	13	44	65	54	34	55	0,08	0,33	0,74	0,65	1,22	3,09
M-32	M-32C	-	32	40	4	84	48	18	13	50	75	63	40	55	0,09	0,43	0,95	1,14	2,17	5,48
M-38	M-38C	-	38	40	4	84	48	18	13	58	83	69	44	60	0,13	0,55	1,23	1,58	3,55	8,68
M-42		-	42	42	4	88	50	19	13	65	92	78	50	60	0,14	0,68	1,50	2,32	5,98	14,28
M-48	M-48C	-	48	50	4	104	50	27	13	68	95	78	50	60	0,23	0,79	1,81	3,90	7,22	18,34
M-65	M-65C	21	65	55	4	114	68	23	16	96	132	110	42	70	0,55	1,90	4,35	21,2	31,8	84,8
I-80	M-80C	31	90	90	6	186	93	46,5	20	124	178	145	46	-	1,13	5,20	11,53	68,9	150,8	370,5
I-100		38	100	110	8	228	102	63	22	152	210	176	48	-	1,78	9,37	20,52	158,6	401,3	961,2
I-125		45	125	140	10	290	134	78	30	192	270	225	54	-	3,88	19,44	42,76	562,9	1362,3	3287,5

BoWex® M appplicable up to +120°C with black sleeve
BoWex® M applicable for higher torques with black sleeve (see page 84)

Ordering example:

BoWex® M-28	d_1 Ø20	d_2 Ø28
Size and type of coupling	Finish bore H7 keyway to DIN 6885 sheet 1 (JS9)	Finish bore H7 keyway to DIN 6885 sheet 1 (JS9)

BoWex® AS and Spec.-I
Curved-tooth gear coupling®

Compact and maintenance-free



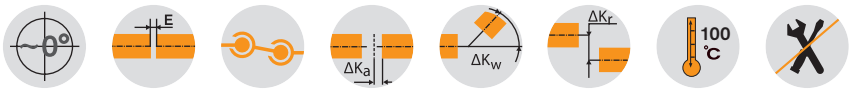

Components

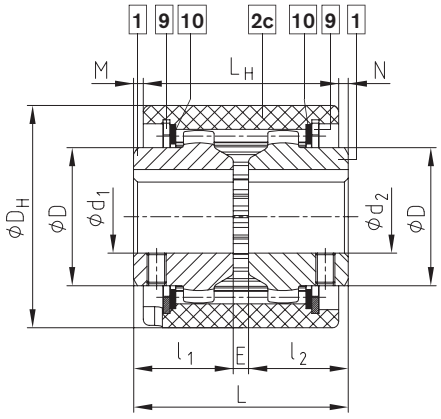

Type AS

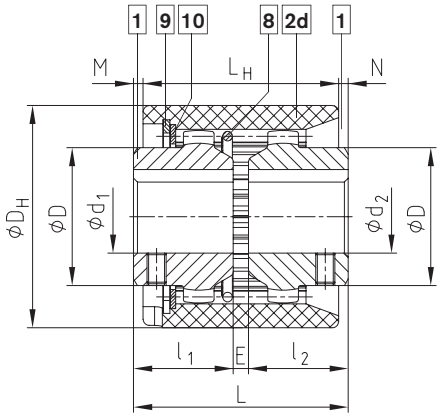

Type Spec.-I

BoWex® type AS and type Spec.-I

Size	Pilot bore		Finish bore d1, d2		Dimensions [mm]								Weight with max. bore Ø			Mass moment of inertia J with max. bore Ø		
	Unbored	Pilot bored		max.	l_1, l_2	E	L	L_H	M, N	D	D_H	Hub length. l_1, l_2 max.	Sleeve [kg]	Hub [kg]	Total [kg]	Sleeve [kgcm2]	Hub [kgcm2]	Total [kgcm2]
24	x	-	Finish bores see stock programme	24	26	4	56	51	2,5	36	58	50	0,11	0,14	0,39	0,38	0,36	1,10
28	x	-		28	40	4	84	56	14	44	70	55	0,16	0,33	0,82	1,54	1,22	3,98
32	x	-		32	40	4	84	58	13	50	84	55	0,21	0,43	1,07	2,75	2,17	7,09
45	x	-		45	42	4	88	60	14	65	100	60	0,27	0,63	1,53	5,49	5,66	16,81
65	-	21		65	55	4	114	84	15	96	140	70	0,84	2,10	5,00	29,83	43,96	117,8
80	-	31		80	90	6	186	93	46,5	124	178	-	1,30	5,20	11,70	83,20	150,8	384,8
100	-	38		100	110	8	228	102	63	152	210	-	2,05	9,40	20,80	184,4	401,3	987,0
125	-	45		125	140	10	290	134	78	192	270	-	4,32	19,44	43,10	620,0	1362,3	3344,6

Ordering example:

BoWex® 32 AS	d_1 Ø32	d_2 Ø32
Size and type of coupling AS or Spec.-I	Finish bore H7 keyway to DIN 6885 sheet 1 (JS9)	Finish bore H7 keyway to DIN 6885 sheet 1 (JS9)

BoWex® SG, SSR and Spec.-I/CD
Curved-tooth gear coupling®

Type with dust protection



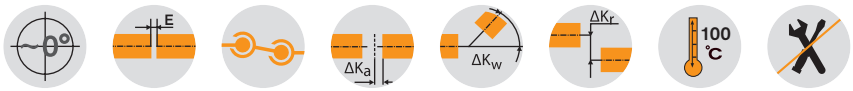

BoWex® type SG

Size	Pilot bore		Finish bore		Dimension [mm]								Weight with max. bore Ø			Mass moment of inertia J with max. bore Ø		
	Unbored	Pilot bored	min.	max.	l_1, l_2	E	L	L_H	M, N	D	D_H	Hub length. l_1, l_2 max.	Sleeve [kg]	Hub [kg]	Total [kg]	Sleeve [kgcm2]	Hub [kgcm2]	Total [kgcm2]
24 SG	x	-	10	24	36	4	76	51	12,5	36	58	50	0,11	0,14	0,39	0,38	0,36	1,1
28 SG	x	-	10	28	40	4	84	56	14	44	70	55	0,16	0,33	0,82	1,54	1,22	3,98
32 SG	x	-	12	32	40	4	84	58	13	50	84	55	0,21	0,43	1,07	2,75	2,17	7,09
45 SG	x	-	20	45	42	4	88	60	14	65	100	60	0,27	0,63	1,53	5,49	5,66	16,81
65 SG	-	21	30	65	70	4	144	84	30	96	140	-	0,84	2,1	5	29,83	43,96	117,8
80 SG	-	31	35	80	90	6	186	93	46,5	122	175	-	1,3	5,2	11,7	83,2	150,8	384,8
100 SG	-	38	40	100	110	8	228	102	63	150	210	-	2,05	9,4	20,8	184,4	401,3	987
125 SG	-	45	50	125	140	10	290	134	78	190	270	-	4,32	19,44	43,1	620	1362,3	3344,6

Thread for setscrews for finish bored hubs only.

BoWex® type SSR

Size	Pilot bore		Finish bore		Dimension [mm]								Weight with max. bore Ø			Mass moment of inertia J with max. bore Ø		
	Unbored	Pilot bored	min.	max.	l_1, l_2	E	L	L_H	M, N	D	D_H	Hub length. l_1, l_2 max.	Sleeve [kg]	Hub [kg]	Total [kg]	Sleeve [kgcm2]	Hub [kgcm2]	Total [kgcm2]
24 SSR	x	-	10	22	26	4	56	51	2,5	35	58	50	0,11	0,14	0,39	0,38	0,36	1,1
28 SSR	x	-	10	26	40	4	84	56	14	42	70	55	0,16	0,33	0,82	1,54	1,22	3,98
32 SSR	x	-	12	30	40	4	84	58	13	48	84	55	0,21	0,43	1,07	2,75	2,17	7,09
45 SSR	x	-	20	42	42	4	88	60	14	63	100	60	0,27	0,63	1,53	5,49	5,66	16,81
65 SSR	-	21	30	65	55	4	114	84	15	95	140	70	0,84	2,1	5	29,83	43,96	117,8
80 SSR	-	31	35	80	90	6	186	93	46,5	120	175	-	1,3	5,2	11,7	83,2	150,8	384,8
100 SSR	-	38	40	100	110	8	228	102	63	150	210	-	2,05	9,4	20,8	184,4	401,3	987
125 SSR	-	45	50	125	140	10	290	134	78	190	270	-	4,32	19,44	43,1	620	1362,3	3344,6

BoWex® type Spec.-I/CD

Size	Pilot bore		Finish bore		Dimension [mm]										Weight with max. bore Ø			Mass moment of inertia J with max. bore Ø		
	Un-bored	Pilot bored	min.	max.	L	L_1	L_H	E	E_1	l_2	l_1	D_H	D	M	N	Sleeve [kg]	Hub [kg]	Total [kg]	Sleeve [kgcm2]	Hub [kgcm2]	Total [kgcm2]
24 CD	x	-	10	24	70	73,5	51	4	9,0	26	40	58	36	20	2,5	0,11	0,14	0,39	0,38	0,36	1,1
28 CD	x	-	10	28	94,5	98	56	4	8,5	40	50,5	70	44	28	14	0,16	0,33	0,82	1,54	1,22	3,98
32 CD	x	-	12	32	94,5	-	58	4	8,5	40	50,5	84	50	27	13	0,21	0,43	1,07	2,75	2,17	7,09
45 CD	x	-	20	45	101,5	-	60	4	8,5	42	55,5	100	65	32	14	0,27	0,63	1,53	5,49	5,66	16,81
65 CD	-	21	30	65	123	-	84	4	10	55	64	140	96	28,5	15	0,84	2,1	5	29,83	43,96	117,8
80 CD	-	31	35	80	179	-	93	6	13	90	83	178	124	44	46,5	1,3	5,2	11,7	83,2	150,8	384,8

For type Spec.-I/CDB with safety pins please order dimension sheet.

Ordering example:

BoWex® 45 SG	d_1 Ø22	d_2 Ø40
Size and type of coupling SG, SSR or Spec.-I/CD	Finish bore H7 keyway to DIN 6885 sheet 1 (JS9)	Finish bore H7 keyway to DIN 6885 sheet 1 (JS9)

Type SG with dust protection circlips

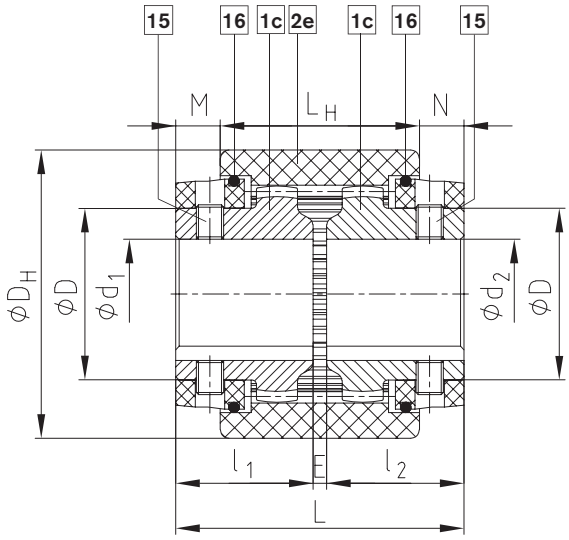

Type SSR with supporting circlips

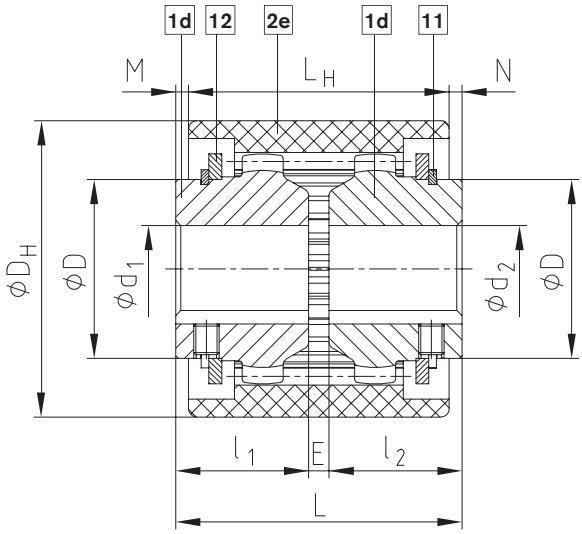

Type Spec.-I/CD

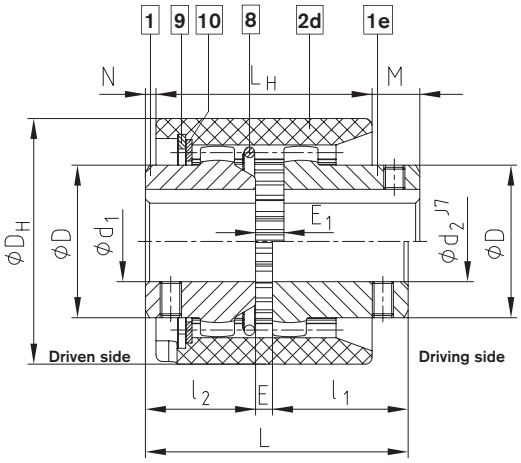

Shiftable coupling (at standstill)



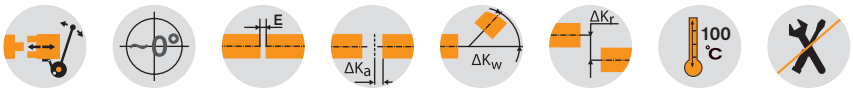

BoWex® type SD

Size	Pilot bore		Finish bore d1, d2			Dimensions [mm]												Weight with max. bore Ø		Mass moment of inertia J with max. bore Ø		Shifting force [N]
	Un-bored	Pilot bored	d_1	d_1 max.	d_2 max.	E	l_1	l_2	L	L_H	l_3	M	W	N	D	D_H	D_A	Shifting hub with sleeve [kg]	Driving hub [kg]	Shifting hub with sleeve [kgcm2]	Driving hub [kgcm2]	
24 SD	x	-	Finish bores see Lagerprogramm Seite 86	24	24	4	26	50	80	52	31	10	19	18	36	58	78	1,08	0,14	8,23	0,36	140
28 SD	x	-		28	28	4	40	55	99	57	33	21,5	21,5	20,5	44	70	88	1,50	0,33	15,62	1,22	180
32 SD	x	-		32	32	4	40	55	99	58	33	20,5	21,5	20,5	50	84	100	1,85	0,43	22,87	2,17	180
45 SD	x	-		45	45	4	42	60	106	63	37	21,5	22,5	21,5	65	100	125	2,56	0,68	46,07	5,66	250
				48			50		114			29,5							0,79			
65 SD	-	21		65	65	4	55	70	129	77	37	28	25	24	95	140	156	5,07	2,30	158,99	43,96	350
80 SD	-	31		80	80	6	90	90	186	96	47	56	35	34	124	175	195	10,60	5,20	523,7	150,8	350
100 SD	-	38		100	100	8	110	110	228	113	55	72	43	43	152	210	235	18,87	9,37	1350	401,3	400
125 SD	-	45		125	125	10	140	140	290	149	70	89	52	52	192	270	298	40,40	9,44	4919	1362,3	450

Connection dimensions of BoWex® SD shifting ring (comp. 17) for mounting of: slip ring SD1 (s. catalogue on p. 87), shifting disk etc.

Size	Dimensions [mm]			
	L_1	L_2	z x G	s
24 SD	48	58	4 x M6	2
28 SD	48	58	4 x M6	2
32 SD	64	75	4 x M6	2
45 SD	75	90	4 x M8	2
65 SD	100	114	4 x M8	2
80 SD	130	145	4 x M8	3
100 SD	180	196	6 x M10	4
125 SD	220	236	6 x M10	4

Performance data / torques see type M (page 84), max circumferential speed v=20 m/s, referring to ø D_A
Other sizes on request

Ordering example:

BoWex® 32 SD	d_1 Ø32	d_2 Ø32
Size and type of coupling	Finish bore H7 keyway to DIN 6885 sheet 1 (JS9)	Finish bore H7 keyway to DIN 6885 sheet 1 (JS9)

Components

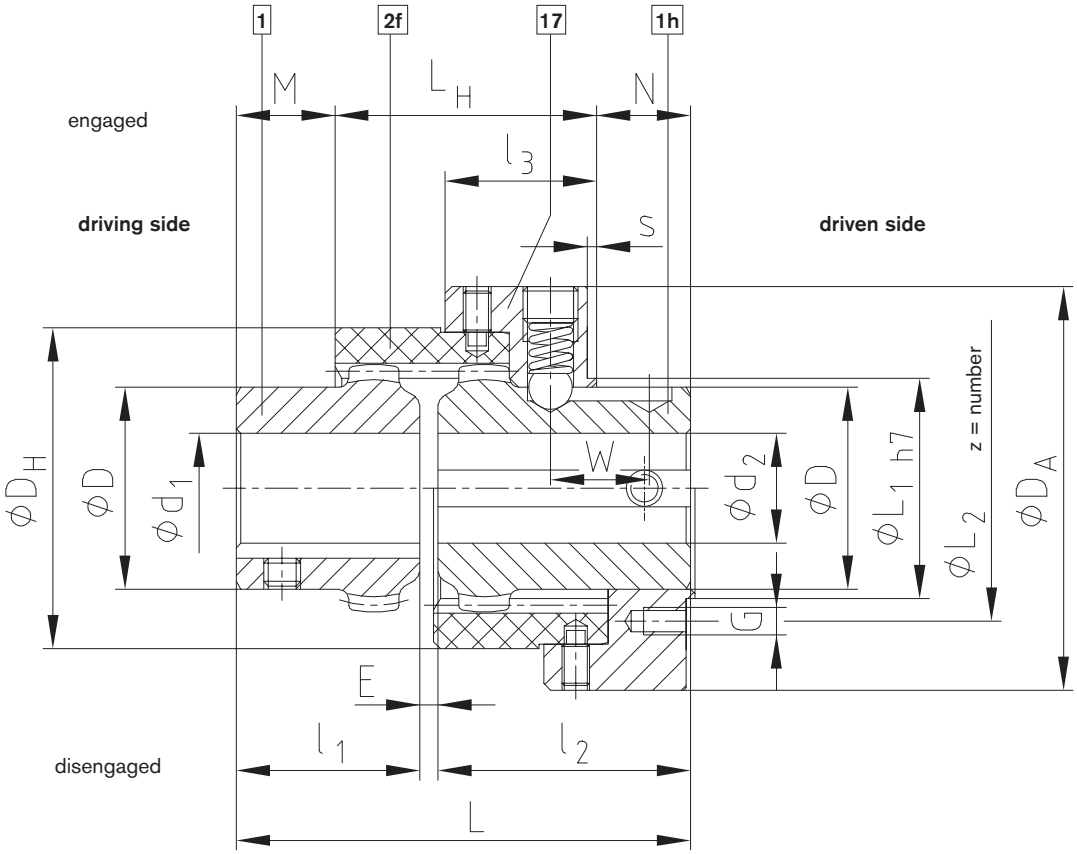

BoWex® SD

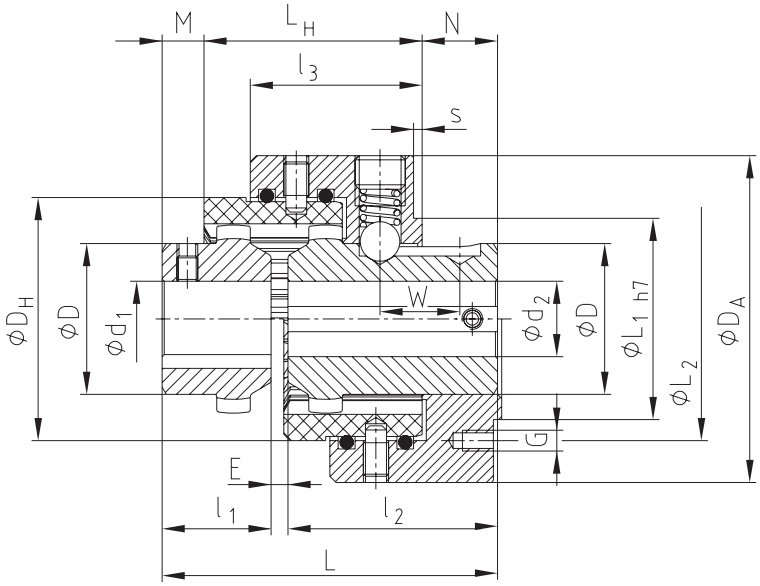

BoWex® SD-D

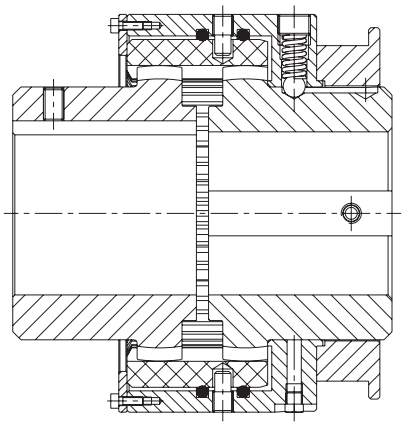

BoWex® SD-D3

BoWex® SD1
Curved-tooth gear coupling®

Shiftable coupling with shiftable linkage (at standstill)

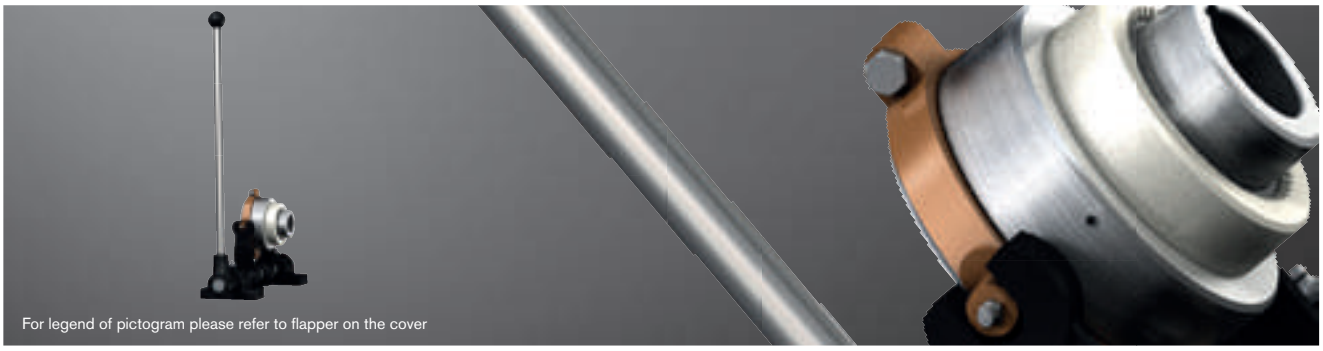

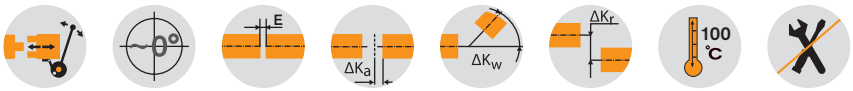

BoWex® type SD1 and slip ring

Size	Finish bore			Dimensions [mm]																		Shifting force [N]
	d_1	d_1 max.	d_2 max.	E	l_1	l_2	L	L_G	l_4	l_5	M	W	t	D	D_H	D_A	D_1	D_2±0,1 (keyway)	D_5	n±0,1 (keyway)	
24 SD1	Finish bores see stock programme on page 86	24	24	4	26	50	80	67	11	46	10	19	16	36	58	78	45	70,5	78	12,5	140
28 SD1		28	28	4	40	55	99	72	11	48	21,5	21,5	16	44	70	88	45	70,5	78	12,5	180
32 SD1		32	32	4	40	55	99	78	13,5	53	20,5	21,5	21	50	84	100	60	89,5	100	17,5	180
45 SD1		45	45	4	42	60	106	84	14	58	21,5	22,5	22	65	100	125	70	112,5	125	18	250
		48			50		114				29,5										
65 SD1		65	65	4	55	70	129	103	16	61	26	25	25	96	140	156	96	130,5	145	20,5	350
80 SD1		80	80	6	90	90	186	124	18,5	75	56	35	29	124	175	195	125	164,5	182	25,5	350
100 SD1		100	100	8	110	110	228	152	28	94	72	43	39	152	210	235	174	210,5	230	30,5	400
125 SD1		125	125	10	140	140	290	193	30,5	114	89	52	44	192	270	298	214	250,5	275	35,5	450

BoWex® type SD1 - shiftable linkage

Size	Shiftable linkage size	Slip ring size	Dimensions [mm]															Dimensions with m_1 max.		
			a	b	c	d	d_3	d_4	e	F	g_1	L_2	L_3	m	m_1 min.	m_1 max.	A	B	m_3	m_4	m_5
24 SD1	1	1.1	110	50	18	20	11	16	30	70	55	320	400	75	180	190	90	114		55	16
28 SD1	1	1.1																			
32 SD1	2	2.2				25				97,5	60	430	450		240	270	111	151	20	80	34
45 SD1	3	3.3	140					20	40					100			140	180			
65 SD1	3	4.4		60	25	30	13,5			120	70	490	600		280	310	170	210		90	44
80 SD1	4	5.5				35			50	147,5		565	750		321	365	200	244		100	54
100 SD1	5	6.6	160					30						120	365	410	250	300	30		
125 SD1	5	7.7				40			50[1)]	190	80	630	1085		-		300	350		110	62

[1)] = With a continuous base plate the dimension „e“ has to be increased by at least 10 mm. The brackets of driving and driven side have to be adapted accordingly.
Also available as type SD-D. Other sizes on request.

Performance data / torques see type M (on page 84), max. circumferential speed v=20 m/s, referring to ø D_A

Ordering example:

BoWex® 65 SD1	d_1 Ø32	d_2 Ø32	4.4	3
Coupling size and type	Finish bore H7 keyway to DIN 6885 sheet 1 (JS9)		Size of slip ring	Size of shiftable linkage

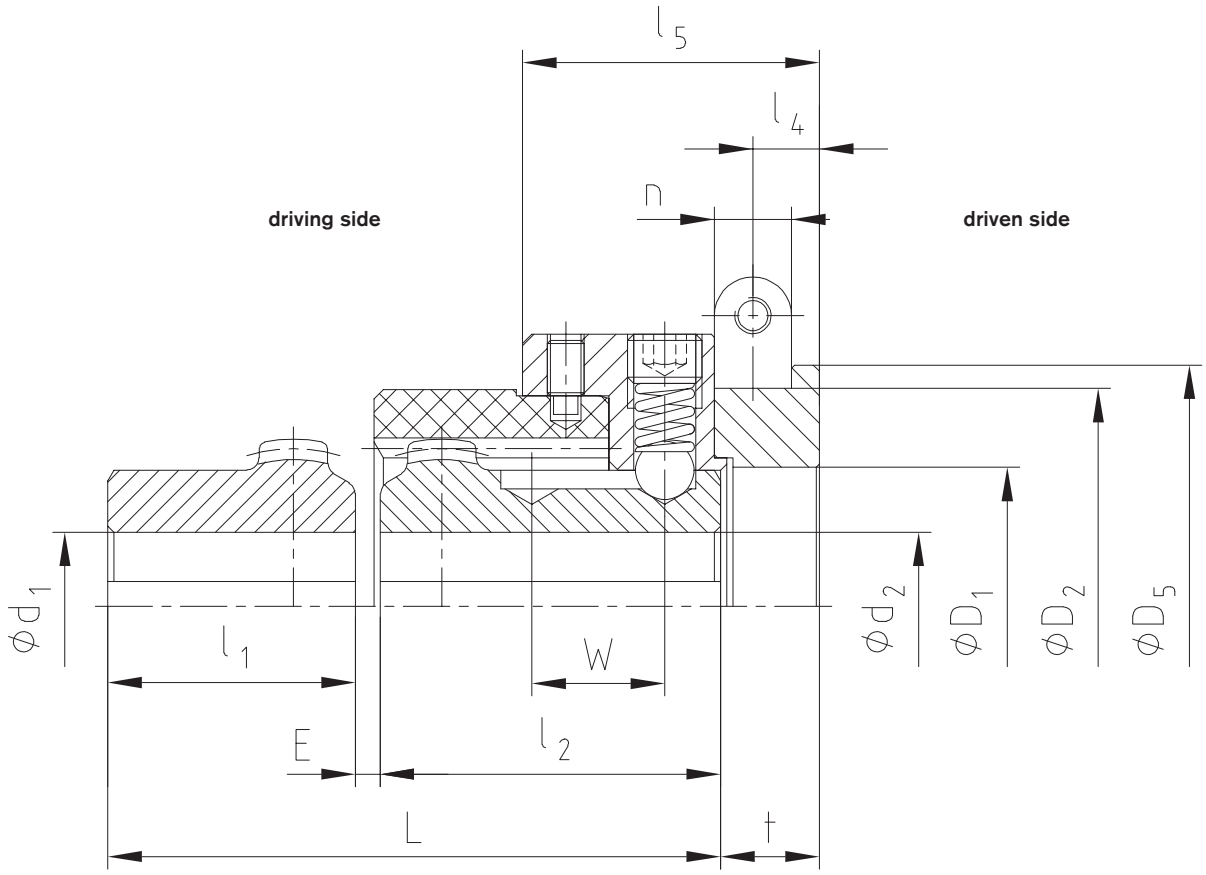
driving side
driven side
l5
l4
n
ϕd1
l1
W
E
l2
L
t
ϕd2
ϕD1
ϕD2
ϕD5

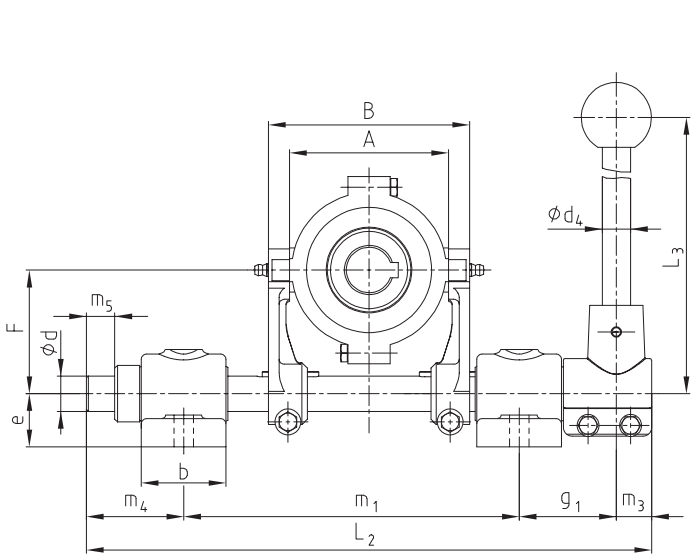
B
A
ϕd4
L3
F
ϕd
e
m5
b
m4
m1
g1
m3
L2

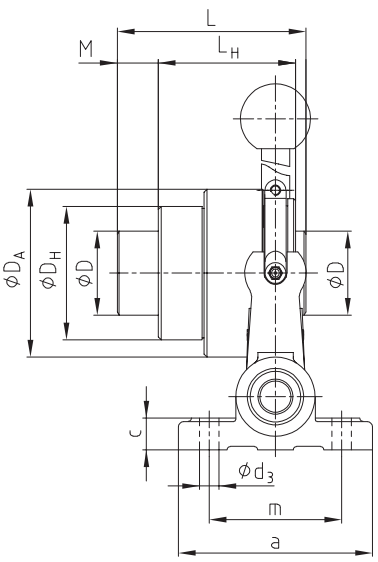
L
M
LH
ϕDA
ϕDH
ϕD
ϕD
c
ϕd3
m
a

BoWex® GT
Curved-tooth gear coupling®

Split CFK sleeve for high power density



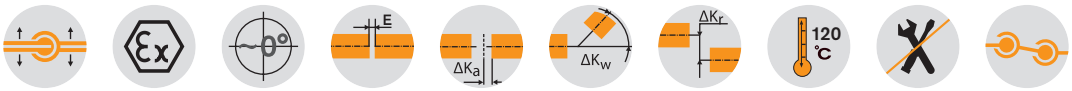

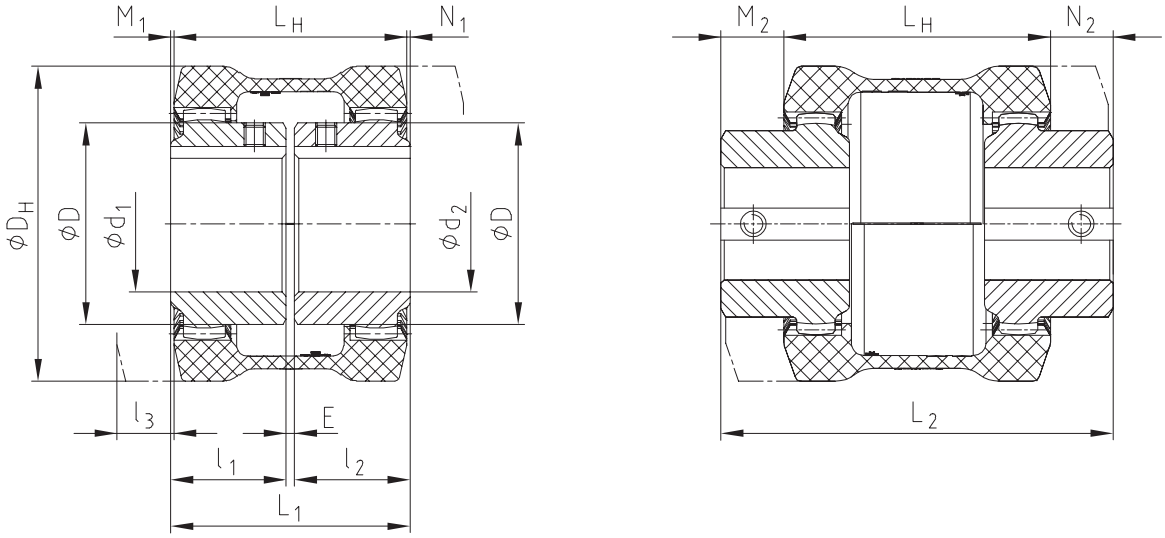

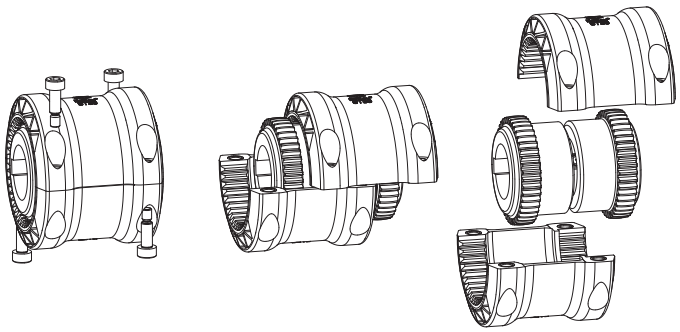

BoWex® type GT with split sleeve

Size	Finish bore d_{max}		Dimensions [mm]											Weight with max. bore Ø			Mass moment of inertia J with max. bore Ø		
	d_1	d_2	D	D_H	L_H	l_1	l_2	l_3	E	L_1	L_2	M_1, N_1	M_2, N_2	Sleeve [kg]	Hub [kg]	Total [kg]	Sleeve [kgcm²]	Hub [kgcm²]	Total [kgcm²]
28	28	28	44	80	80	40	40	15	4	84	124	2	22	0,158	0,22	0,702	1,77	1,22	4,21
38	38	38	58	98	83	40	40	18	4	84	122	0,5	19,5	0,25	0,45	1,15	4,43	3,36	11,15
48	48	48	68	110	106	50	50	21	4	104	160	0	28	0,33	0,67	1,68	7,39	6,11	19,61
65	65	65	96	150	111	55	55	27	4	114	160	1,5	24,5	0,69	1,54	3,77	28,9	31,80	92,5

l_3 **Drop-out center dimension required**

Ordering example:	BoWex® GT-28	d_1 Ø20	d_2 Ø28
	Size and type of coupling	Finish bore H7 keyway to DIN 6885 sheet 1 (JS9)	Finish bore H7 keyway to DIN 6885 sheet 1 (JS9)

BoWex® ZR
Curved-tooth gear coupling®

Bridging larger shaft distances

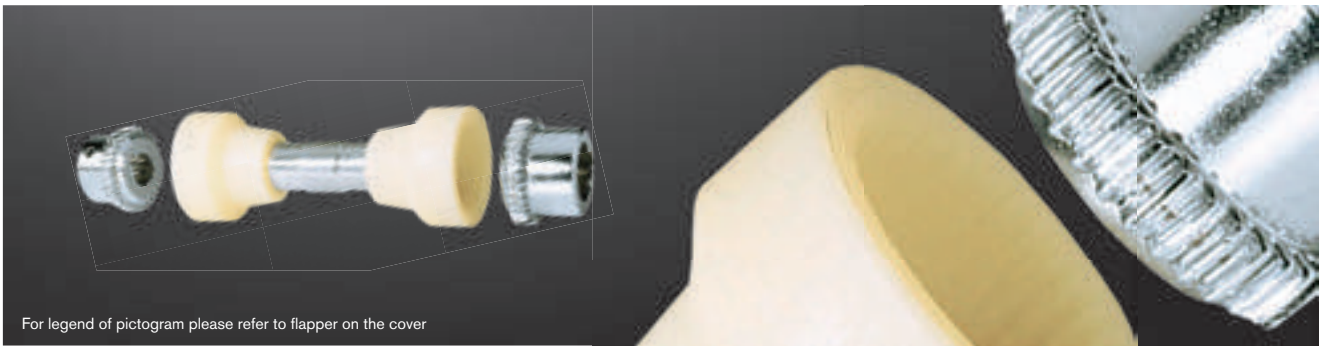

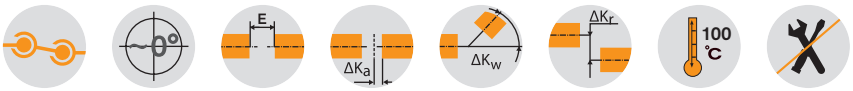

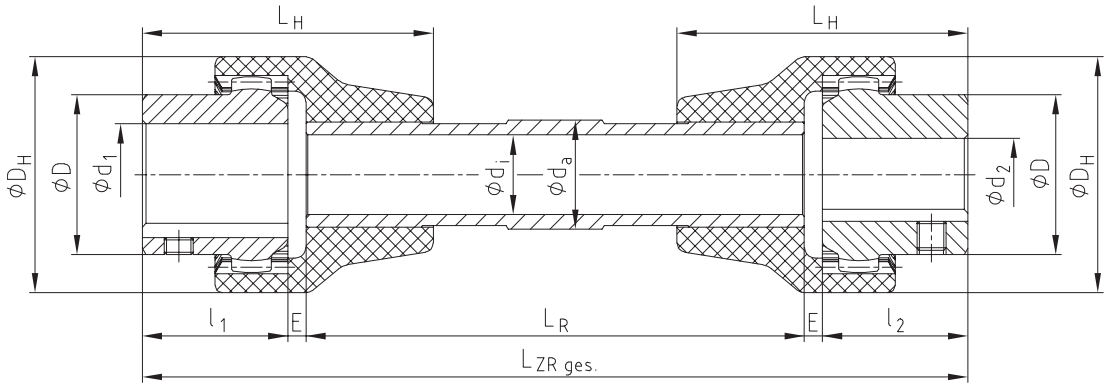

BoWex® type ZR															
Size	Pilot bore	Finish bore	Dimensions [mm]										Torque T_K [Nm]		
		d_1 max. d_2 max.	l_1, l_2	Hub length. l_1, l_2 max.	L_H	E	L_{ZR} total	L_R	D	D_H	d_i	d_a	T_{KN}	$T_{K\ max.}$	T_{KW}
14	-	14	23	40	40	3	as indicated by the customer		25	40	21	25	10	20	5
28	-	28	40	55	60	3			44	66	30	26	45	90	23
42	-	42	42	60	85	3			65	95	40	50	100	200	50
48	-	48	50	60	85	3			68	95	40	50	140	280	70

BoWex® ZR couplings are available up to a length of 2000 mm for serial applications only ($n_{max.}$ = 1000 rpm)

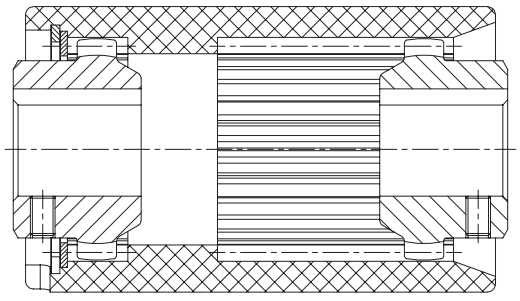

Type Spec.-I with a long PA-sleeve

- Lengthened special sleeves available on request
- Bridging larger shaft distances
- Axial shifting of driving and driven shaft at standstill
- Maintenance-free
- Compensating for larger displacements
- Axial plug-in
- Application range from - 25 °C to + 100 °C
- BoWex® Spec.-I with lengthened sleeve on request

BoWex® HEW Compact
Curved-tooth gear coupling®

Compensating for large displacements, very compact design



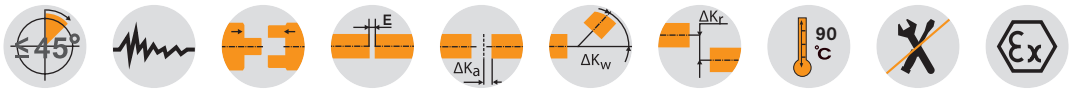

BoWex® type HEW Compact

Size	Max. finish bore d		Dimensions [mm]													Weight with pilot bored coupling [kg]	Mass moment of inertia with pilot bored coupling J_1 [kgm²]	Mass moment of inertia with pilot bored coupling J_2 [kgm²]
	d_1	d_2	D_1	D_2	D_4	l_1	l_2	l_3	l_4	E	L	L_1	D_3	z	M			
42-130	42	42	90	65	131	42	42	45	37	34	118	98	78	6	M6	3,4	0,003	0,001
65-180	65	65	130	96	180	60	55	55	47	30	145	122	110	8	M10	9	0,014	0,006
80-225	75	80	145	124	225	70	90	77	51	50	210	158	120	10	M12	18,9	0,035	0,029
100-305	100	100	200	152	305	90	110	90	73	58	258	187	175	16	M12	40,2	0,152	0,087
125-365	125	125	235	192	365	120	140	150	90	68	328	240	205	12	M16	75	0,36	0,26

Technical data

Coupling size	Elastomer hardness [Shore A]	Torque			Perm. operating speed n max. [rpm]	Perm. damping power			Dynamic torsion spring stiffness	Relative damping ψ	Resonance factor $V_R \approx 2 \cdot \Pi / \psi$	Radial spring stiffness Cr [N/mm]
		T_{KN} [Nm]	T_{Kmax} [Nm]	With 10 Hz T_{KW} [Nm]		P_{KW} [W]			Ct_{dyn} [Nm/rad]			
						60 °C	80 °C	90 °C				
	T50	150	450	45					780	0,6	10,5	178
BoWex 42 HEW Compact	T65	180	540	54	7300	24	12	6	2400	0,8	7,9	600
	T70	210	630	63					2900	1,2	5,2	710
	T50	400	1200	120					2850	0,6	10,5	379
BoWex 65 HEW Compact	T65	500	1500	150	5500	48	24	12	7800	0,8	7,9	955
	T70	575	1725	173					9500	1,2	5,2	1240
	T50	900	2700	270					5000	0,6	10,5	420
BoWex 80 HEW Compact	T65	1100	3300	330	4400	96	48	24	13000	0,8	7,9	1090
	T70	1300	3900	390					16500	1,2	5,2	1450
	T50	2000	6000	600					17000	0,6	10,5	760
BoWex 100 HEW Compact	T65	2600	7800	780	3200	156	78	39	44000	0,8	7,9	1850
	T70	3000	9000	900					50000	1,2	5,2	2250
	T40	3000	9000	900					15000	0,6	10,5	476
BoWex 125 HEW Compact	T50	4000	12000	1200	2900	192	96	48	25000	0,8	7,9	750
	T65	5000	15000	1500					62000	1,2	5,2	1930

Ordering example:

BoWex® 65 HEW Compact	T50	d_1 Ø40	d_2 Ø65
Coupling size and type	Elastomer hardness	Finish bore H7 keyway to DIN 6885 sheet 1 (JS9)	Finish bore H7 keyway to DIN 6885 sheet 1 (JS9)

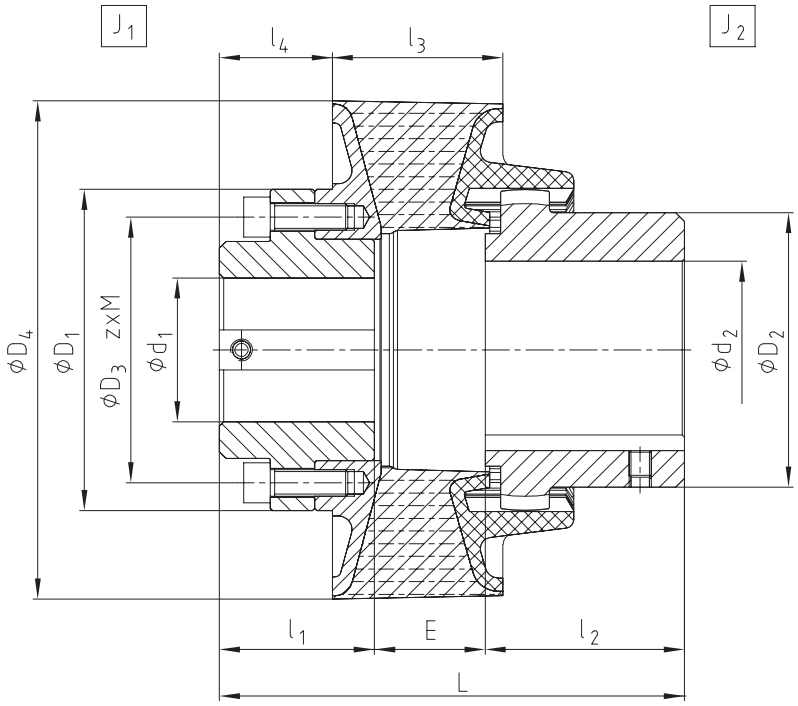

BoWex® HEW Compact with reduced hub

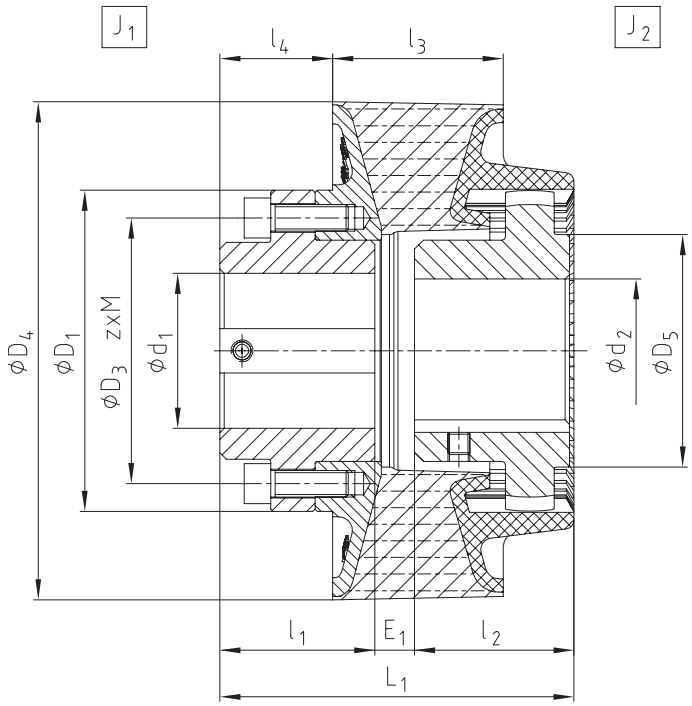

BoWex® M
Curved-tooth gear coupling®

Made of corrosion-resistant materials





BoWex® junior plug-in coupling (two-part) and BoWex® junior M (three-part)														
Size	Finish bore				Dimensions [mm]									
	Hub part 1b		Plug-in sleeve part 2b		D_H	l_1, l_2	E_1	E	L_{H1}	L_H	L_1	L	M_1	M, N
	d_1	D_1	d_2	D_2										
14	Ø6, Ø7, Ø8, Ø9	22	Ø8	22										
M-14	Ø10, Ø11	25	Ø10, Ø11	25	40	23	2	4	40	37	48	50	8	6,5
	Ø12, Ø14	26	Ø12, Ø14	26										
19	Ø12, Ø14	27	Ø14, Ø15	29										
M-19	Ø16	30			48	25	2	4	42	37	52	54	10	8,5
	Ø19	32	Ø19	35										
	Ø10, Ø11, Ø12	26	Ø14, Ø16	32										
24	Ø14, Ø15, Ø16	32			53	26	2	4	45	41	54	56	9	7,5
M-24	Ø18, Ø19, Ø20	36	Ø19, Ø20	36										
	Ø24	38	Ø24	40										

BoWex® type M							
Size	Finish bore d_1 max., d_2 max.	Dimensions [mm]					
		D_H	D	l_1, l_2	E	L_H	L	M, N
M-24	24	53	36	26	4	41	56	7,5
M-38	38	83	58	40	4	48	84	18
M-48	48	95	68	50	4	50	104	27

Other coupling sizes: M24C, M38C, M48C on request. Setscrews with BoWex Junior coupling are made of V4A as a standard.

Applications:
Food industry, print and paper industry, textile industry, sewage technology, wash-mobiles, chemical and pharmaceutical industry, offshore units, etc. For use in aggressive environment (air, water, chemicals, etc.).

Ordering example:	BoWex® M-24 V4A	d_1 Ø20	d_2 Ø24
	Size and type of coupling	Finish bore H7 keyway to DIN 6885 sheet 1 (JS9)	Finish bore H7 keyway to DIN 6885 sheet 1 (JS9)

Type junior plug-in coupling (two-part)

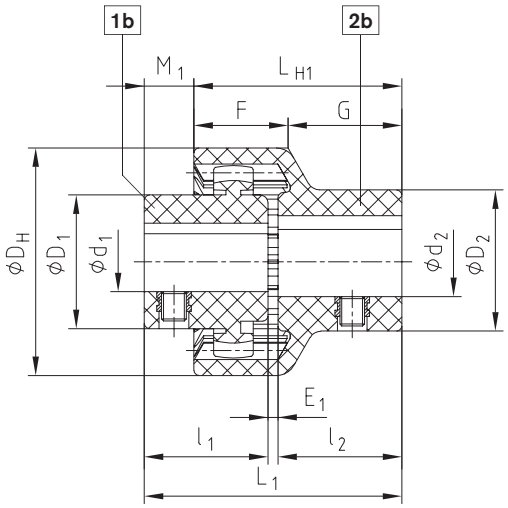

Type junior M coupling (three-part)

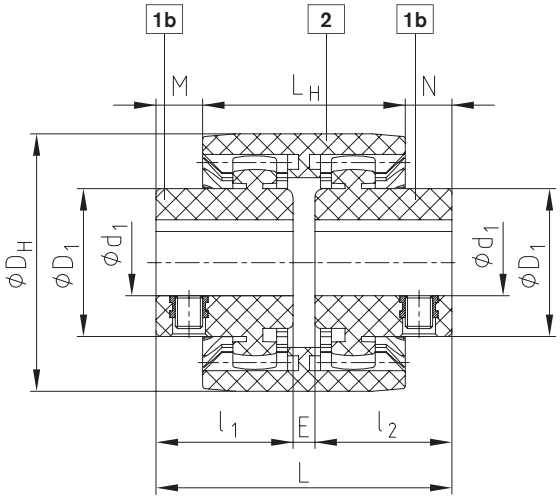

Type M V4A

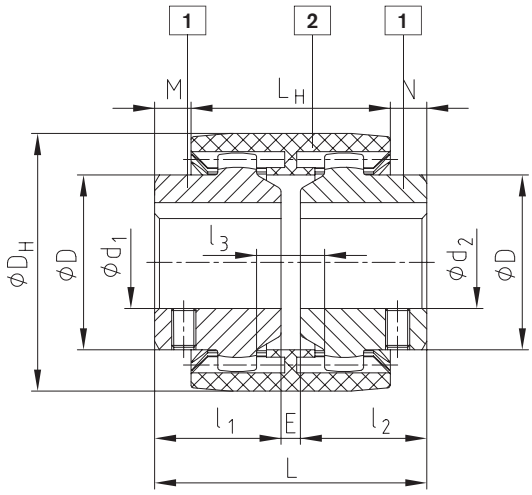

Taper bores

BoWex® with taper bore

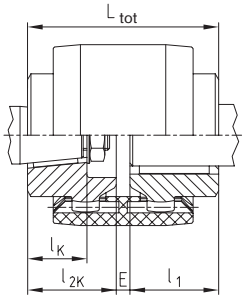

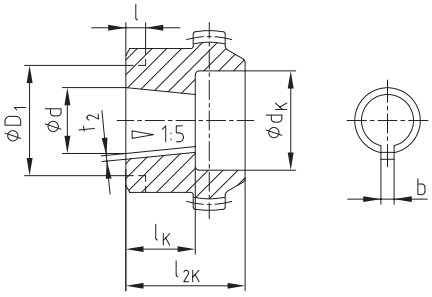

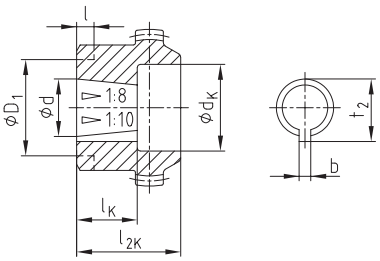

$L_{Ges} = l_1 + E + l_{2K}$

Stock items see page 86

Taper bores 1:5

Dimensions [mm]					Counterbore dK and hub length l2K [mm] Recess on hub collar D1 x l [mm]																	
Code	Details of bores				14		19		24		28		32		38		42		48		65	
	$d^{+0,05}$	b^{JS9}	$t_2{}^{+0,1}$	lK	dK	l2K	dK	l2K	dK	l2K	dK	l2K	dK	l2K	dK	l2K	dK	l2K	dK	l2K	dK	l2K
A-10	9,85	2	1,0	11,5	18	23	18	25	25	26	25	26	25	26	25	26						
					-		30 x 7		30 x 7		30 x 5		-		30 x 5							
B-17	16,85	3	1,8	18,5			25	30	28	30	36	40	36	40	36	40	45	42	45	42	45	50
C-20	19,85	4	2,2	21,5					28	36	36	40	36	40	36	40	45	42	45	42	45	50
Cs-22	21,95	3	1,8	21,5					28	36	36	40	36	40	36	40	45	42	45	42		
D-25	24,85	5	2,9	26,5							36	40	36	40	36	40	45	42	45	42	45	50
E-30	29,85	6	2,6	31,5											45	55	45	55	45	55	45	55
F-35	34,85	6	2,6	36,5															52	60	55	60
G-40	39,85	6	2,6	41,5															52	60	65	70

Taper bores 1:8

Dimensions [mm]					Counterbore dK and hub length l2K [mm] Recess on hub collar D1 x l [mm]																	
Code	Details of bores				14		19		24		28		32		38		42		48		65	
	$d^{+0,05}$	b^{JS9}	$t_2{}^{+0,1}$	lK	dK	l2K	dK	l2K	dK	l2K	dK	l2K	dK	l2K	dK	l2K	dK	l2K	dK	l2K	dK	l2K
N/1	9,7 ±0,015	$2,4^{+0,05}$	10,85	17	18	26	18	25	25	26	25	30	25	30	25	30						
					23 x 8		23 x 8		23 x 8		23 x 8		-		23 x 8							
N/1c	11,6	3^{JS9}	12,90	16,5	18	23			25	26	25	30										
N/1e	13	$2,4^{+0,05}$	13,80	21					25	30	25	30			25	30						
N/1d	14	3^{JS9}	15,50	17,5	20	23	25	30	28	30	28	30	28	40								
					-		-		-		28 x 10		-									
N/2	17,287	$3,2^{+0,05}$	18,24	24					28	35	36	40	36	40	36	40	45	42	45	42	45	50
									-		35 x 12		-		-		-		-		-	
N/2a	17,287	4^{JS9}	18,94	24					28	35	36	40	36	40	36	40	45	42	45	42	45	50
									-		35 x 12		-		-		-		-		-	
N/2b	17,287	3^{JS9}	18,34	24					28	35					36	40	45	42	45	42		
									-						-		-		-			
N/3	22,002	4^{JS9}	23,40	28							36	40	36	40	36	40	45	42	45	42	45	50
											-		-		-		-		-		48 x 14	
N/4	25,463	$4,78^{+0,05}$	27,83	36							36	50	36	50	36	50	45	50	45	50	45	62
											-		-		-		58 x 10		58 x 10		-	
N/4b	25,463	5^{JS9}	28,23	36							36	50					45	50	45	50	45	62
N/4a	27	$4,78^{+0,05}$	28,80	32,5											36	50						
N/4g	28,45	6^{JS9}	29,32	38,5											36	60	45	60	45	60		
N/5	33,176	$6,38^{+0,05}$	35,39	44											45	60	45	60	45	60	45	62
N/5a	33,176	7^{JS9}	35,39	44													45	60	45	60	45	62

Taper bores 1:10

Dimensions [mm]					Counterbore dK and hub length l2K [mm]																	
Code	Details of bores				14		19		24		28		32		38		42		48		65	
	$d^{+0,05}$	b^{JS9}	$t_2{}^{+0,1}$	lK	dK	l2K	dK	l2K	dK	l2K	dK	l2K	dK	l2K	dK	l2K	dK	l2K	dK	l2K	dK	l2K
CX-20	19,85	5	22,08	32							36	50			36	50	45	50	45	50		
DX-25	24,95	6	26,68	45									36	50			45	60	45	60	45	60
EX-30	29,75	8	31,88	50													45	60	45	60	45	70

Spline hubs and inch bores

BoWex® spline hubs – basic programme

Spline hub (N)

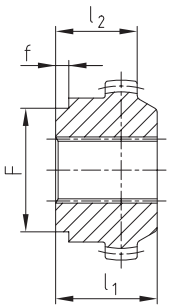

Clamping hub (K)

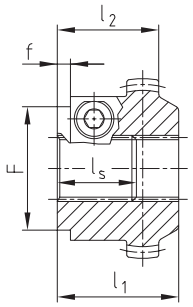

If it is not possible to fasten the hubs of pump shafts with involute spline by means of an end plate and a screw, we recommend to use our spline clamping hub.
The radial clamping ensures a backlash-free tight fit on the pump shaft.

Spline and clamping hubs to DIN 5480

Size	Dimensions [mm]							Order designation specify coupling size
	Type	Spline size	l_1	l_2	l_S	F	f	
	N	25x1,25x18	42	-	-	-	-	P000205
42	K	25x1,25x18	42	-	-	-	-	P500202
	K	30x2x14	42	-	-	60	6	P500203
48	N	30x2x14	50	-	-	60	6	P000206
	K	30x2x14	50	-	-	60	6	P500203
	N	35x2x16	55	-	-	60	6	P000303
	K	35x2x16	60	-	-	60	6	P500301
65	N	40x2x18	55	-	-	78	6	P000304
	K	40x2x18	60	-	-	78	6	P500302
	K	45x2x21	55	-	-	78	6	P500401

Spline and clamping hubs to SAE J498

Size	Dimensions [mm]							Order designation specify coupling size
	Type	Spline size	l_1	l_2	l_S	F	f	
	K	PH-S 5/8" 16/32DP, z=9	42	-	-	-	-	P558101
42	K	PI-S 3/4" 16/32DP, z=11	-	35	-	-	-	P559101
	K	PB-S 7/8" 16/32DP, z=13	42	-	-	60	3	P567101
	K	PB-BS 1" 16/32DP, z=15	42	-	27	50	6	P660201
48	K	PA-S 3/8" 16/32DP, z=21	50	-	45	52	7	P663301
65	K	PA-S 3/8" 16/32DP, z=21	55	-	48	52	5	P663301
	K	PC-S 1 1/4" 12/24DP, z=14	55	-	44	52	5	P656201

Inch bores – For stock items see stock programme on page 86 86

Bore and keyway acc. to ANSI/AGMA 9002-C14 Bore (clearance fit) keyway (commercial class fit)						Bore and keyway acc. to ANSI/AGMA 9002-C14 Bore (clearance fit) keyway (commercial class fit)					
KTR Code	Ø Bore ["]	Width of keyway ["]	Ø Bore [mm]	Width of keyway [mm]	Keyway depth/ tolerance +0,381 [mm]	KTR code	Ø Bore ["]	Width of keyway ["]	Ø Bore [mm]	Width of keyway [mm]	Keyway depth/ tolerance +0,381 [mm]
Tb	3/8	1/8	9,525 +0,0254	3,175 +0,051	10,972	Sd	1 1/8	5/16	28,575+0,0254	7,937 +0,051	32,105
DNB	7/16	3/32	11,112 +0,0254	2,382 +0,051	12,293	Js	1 1/4	1/4	31,75+0,0254	6,35 +0,051	34,721
T	1/2	3/16	12,7 +0,0254	4,762 +0,051	14,757	K	1 1/4	5/16	31,75+0,0254	7,937 +0,051	35,331
Ta	1/2	1/8	12,7+0,0254	3,175 +0,051	14,224	Ma	1 3/8	5/16	34,925+0,0254	7,937 +0,051	38,557
DNC	17/32	1/8	13,495 +0,0254	3,175 +0,051	15,011	RH1	1 3/8	3/8	34,925+0,0254	9,525 +0,063	39,141
Do	9/16	1/8	14,287 +0,0254	3,175 +0,051	15,824	Cb	1 7/16	3/8	36,512+0,0254	9,525 +0,063	40,767
E	5/8	1/8	15,875 +0,0254	3,175 +0,051	17,424	Ca	1 1/2	5/16	38,1+0,0254	7,937 +0,051	41,783
Es	5/8	5/32	15,875 +0,0254	3,968 +0,051	17,729	C	1 1/2	3/8	38,1 +0,0254	9,525 +0,0635	42,392
Ed	5/8	3/16	15,875 +0,0254	4,762 +0,051	18,008	Nb	1 5/8	3/8	41,275 +0,0254	9,525 +0,0635	45,618
DNH	11/16	3/16	17,462 +0,0254	4,762 +0,051	19,634	Ls	1 3/4	3/8	44,45 +0,0254	9,525 +0,0635	48,818
Ad	3/4	1/8	19,05 +0,0254	3,175 +0,051	20,624	L	1 3/4	7/16	44,45 +0,0254	11,112 +0,0635	49,428
A	3/4	3/16	19,05 +0,0254	4,762 +0,051	21,259	Lu	1 7/8	1/2	47,625 +0,0254	12,7 +0,0635	53,238
G	7/8	3/16	22,225 +0,0254	4,762 +0,051	24,485	Da	1 15/16	1/2	49,212 +0,0254	12,7 +0,0635	54,864
F	7/8	1/4	22,225 +0,0254	6,35 +0,051	25,069	Ds	2	1/2	50,8 +0,0254	12,7 +0,0635	56,464
Gf	15/16	1/4	23,812 +0,0254	6,35 +0,051	26,695	Pa	2 1/8	1/2	53,975 +0,0381	12,7 +0,063	59,69
H	1	3/16	25,4 +0,0254	4,762 +0,051	27,686	U	2 1/4	1/2	57,15 +0,0381	12,7 +0,063	62,915
Hs	1	1/4	25,4 +0,0254	6,35 +0,051	28,295	Ub	2 3/8	5/8	60,325 +0,0381	15,875 +0,076	67,335
R	1 1/16	3/16	26,987 +0,0254	4,762 +0,051	29,286	Wd	3 3/8	7/8	85,725 +0,0381	22,225 +0,076	95,504
Sb	1 1/8	1/4	28,575 +0,0254	6,35 +0,051	31,521	Wf	3 5/8	7/8	92,075 +0,0381	22,225 +0,076	101,955

The splines and inch bores specified are only a part of KTR's options. Many other variants are available, too.

Coupling in accordance with AGMA 9008-B00, high power density



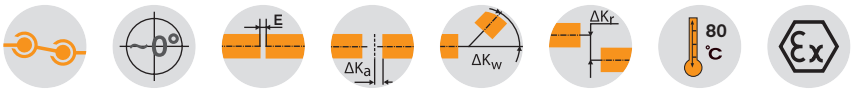

Dimensions

Size	Pilot bore	Max. finish bore	Dimensions [mm]														Grease feeding [dm³] 2)
		d_1; d_2	l_1, l_2	Hub lengthened max l_1, l_2	E_{FA}	E_{FB}	E_{FAB}	L_{FA}	L_{FB}	L_{FAB}	L_3	D	D_{A1}	D_{A2}	F 1)	d_3 1)	
10	26	50	43	105	3	21	12	89	107	98	55	67	111	83	74	52	0,02
15	26	64	50	115	3	15	9	103	115	109	59	87	152	106	84	68	0,04
20	31	80	62	130	3	31	17	127	155	141	79	108	178	129	104	85	0,08
25	38	98	76	150	5	29	17	157	181	169	93	130	213	157	123	110	0,12
30	44,5	112	90	170	5	33	19	185	213	199	109	153	240	181	148	130	0,18
35	46	133	105	185	6	40	23	216	250	233	128	180	280	213	172	150	0,22
40	52	158	120	215	6	42	24	246	282	264	144	214	318	249	192	175	0,35
45	80	172	135	245	8	50	29	278	320	299	164	233	347	273	216	190	0,45
50	80	192	150	295	8	56	32	308	356	332	182	260	390	308	241	220	0,70
55	90	210	175	300	8	70	39	358	420	389	214	283	425,5	333	275	250	0,90
60	100	232	190	305	8	84	46	388	464	426	236	312	457	364,5	316	265	1,15
70	100	276	220	310	10	76	43	450	516	483	263	371	527	424	360	300	1,50

Technical data

Size	Torque [Nm]		max. Drehzahl [1/min]	Weight with max. bore [kg]			Mass moment of inertia with max. bore [kgm²]	Dowel screw (10.9)		
	T_{KN}	T_{KN} (42CrMo4)		Sleeve	Hub	Total		z	M	T_A [Nm]
10	930	1580	8500	0,75	0,55	2,73	0,00436	6	M6	15
15	2000	3300	7700	1,88	1,12	6,38	0,01894	8	M8	36
20	3500	6300	6900	2,60	2,09	9,94	0,04000	6	M10	72
25	6500	11000	6200	4,43	3,56	16,83	0,09749	6	M12	125
30	10000	17400	5800	5,83	6,18	25,21	0,18080	8	M12	125
35	17000	28800	5100	9,71	9,87	41,25	0,41419	8	M14	200
40	28500	48500	4500	11,88	16,07	58,14	0,75535	8	M14	200
45	37000	62000	4000	15,72	21,42	77,08	1,17590	10	M14	200
50	51000	86000	3750	25,66	29,59	114,40	2,24991	8	M18	430
55	65000	110000	3550	31,52	40,30	150,41	3,45102	14	M18	430
60	85000	145000	3400	32,82	52,96	177,44	4,16734	14	M18	430
70	135000	240000	3200	43,52	85,77	268,20	9,32429	16	M20	610

= Standard
1) Space required to align the coupling or replace the sealing ring
2) Grease feeding for each coupling half

If requested, coupling is dynamically balanced (semi-key balancing G 6.3 with speed on requestof customer) For cercumferential speeds exceeding V=30 m/s, we would recommend dyn. balancing.

Ordering example:	GEARex® FA 10	d_1 Ø50	d_2 Ø50
	Size and type of coupling	Finish bore with keyway to DIN 6885 sheet 1	Finish bore with keyway to DIN 6885 sheet 1

Type FA

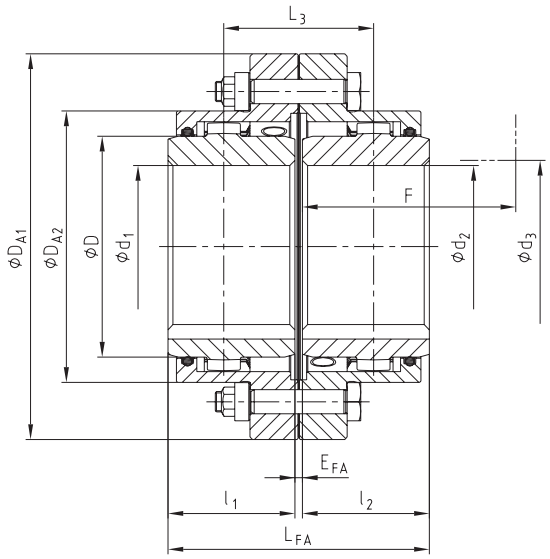

Type FB

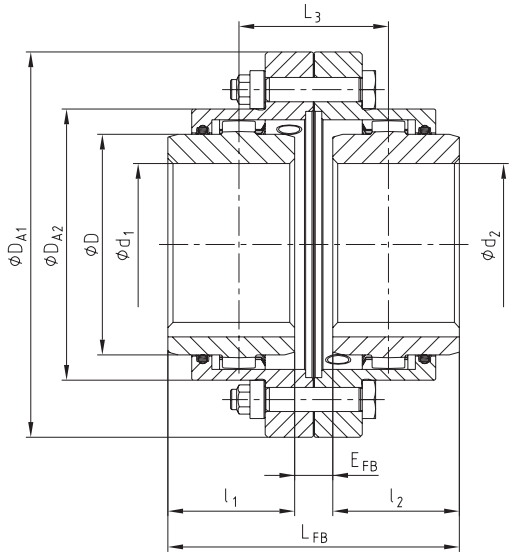

Type FAB

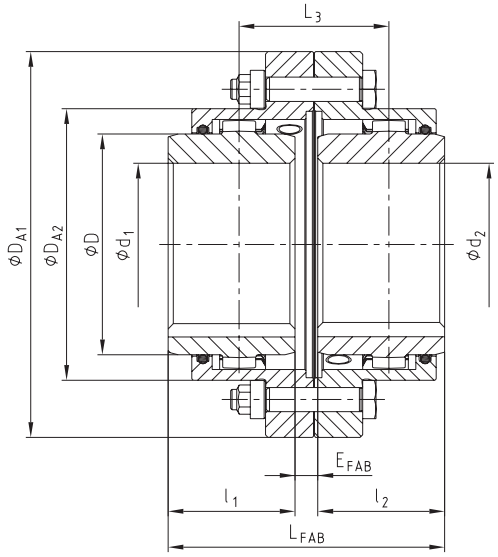

GEARex® DA, DB and DAB
All-steel gear couplings

Easy to assemble, high power density

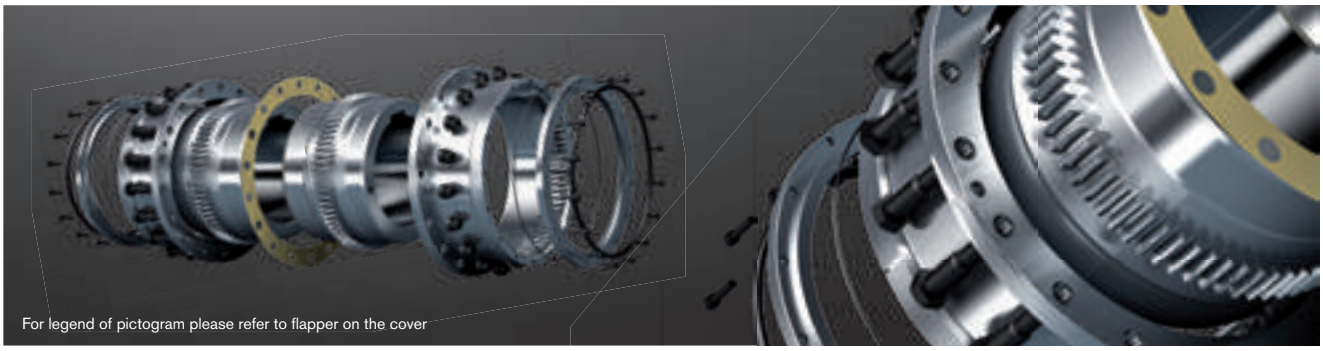

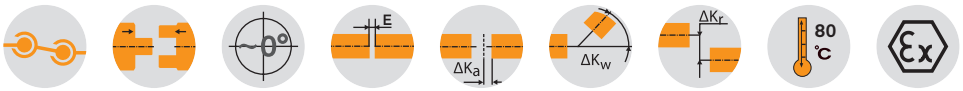

Dimensions

Size	Pilot bore	Max. finish bore	Dimensions [mm]													Grease feeding [dm³] 2)
		d_1; d_2	l_1, l_2	E_{DA}	E_{DB}	E_{DAB}	L_{DA}	L_{DB}	L_{DAB}	L_3	D	D_{A1}	D_{A2}	F 1)	d_3 1)	
20	31	80	62	3	31	17	133	155	144	79	108	187	146	105	85	0,08
25	38	98	76	5	29	17	157	181	169	93	130	220	172	115	105	0,12
30	44,5	112	90	5	33	19	185	213	199	109	153	248	194	140	120	0,18
35	46	133	105	6	40	23	216	250	233	128	180	285	228	165	145	0,22
40	52	158	120	6	42	24	246	282	264	144	214	335	270	180	160	0,35
45	80	172	135	8	50	29	278	320	299	164	233	358	294	195	185	0,45
50	80	192	150	8	56	32	388	356	332	182	260	390	332	215	205	0,70
55	90	210	175	8	70	39	358	420	389	214	283	425,5	354	240	220	0,90
60	100	232	190	8	84	46	388	464	426	236	312	457	380	260	245	1,15
70	100	276	220	10	76	43	450	516	483	263	371	527	445	300	290	1,50
80	140	300	280	10	50	30	570	610	590	310	394	545	475	340	310	2,50
85	160	325	292	13	53	33	597	637	617	325	430	585	515	352	330	3,00
90	180	350	305	13	83	48	623	693	658	353	464	640	560	365	360	4,00
100	220	390	330	13	93	53	673	753	713	383	512	690	612	390	400	5,00
110	220	420	350	20	296	158	720	996	858	508	560	765	665	410	420	6,00
120	260	450	420	25	421	223	864	1261	1063	643	608	825	720	480	470	7,50
130	300	500	440	25	415	220	905	1295	1100	660	684	950	805	520	520	9
140	380	550	460	20	430	225	940	1350	1145	685	750	1010	875	570	590	12
150	460	630	520	30	460	245	1070	1500	1285	765	850	1140	975	630	670	15

Technical data

Size	Torque [Nm]		Max. speed [1/min]	Weight with max. bore [kg]			Mass moment of inertia with max. bore [kgm²]	Dowel screw (10.9)		
	T_{KN}	T_{KN} (42CrMo4)		Sleeve	Hub	Total		z	M	T_A [Nm]
20	3500	6300	6900	3,6	2,1	12,8	0,056	6	M10	72
25	6500	11000	6200	5,5	3,6	20,3	0,125	6	M12	125
30	10000	17400	5800	6,9	6,2	28,9	0,219	8	M12	125
35	17000	28800	5100	11,2	9,8	46,6	0,488	8	M14	200
40	28500	48500	4500	16,3	15,9	70,9	1,011	8	M14	200
45	37000	62000	4000	20,2	21,4	90,7	1,482	10	M14	200
50	51000	86000	3750	27,0	29,5	123,5	2,474	8	M18	430
55	65000	110000	3550	32,6	40,2	159,1	3,714	14	M18	430
60	85000	145000	3400	32,0	52,8	184,4	4,810	14	M18	430
70	135000	240000	3200	43,8	85,5	280	9,907	16	M20	610
80	175000	300000	1900	64	117	362	14,214	18	M20	610
85	225000	380000	1900	75	148	446	20,320	20	M20	610
90	290000	500000	1700	101	183	568	31,036	20	M24	1000
100	380000	650000	1600	117	232	698	45,358	24	M24	1000
110	480000	820000	1450	140	295	940	73,880	20	M30	1700
120	620000	1050000	1350	188	430	1312	118,40	24	M30	1700
130	-	1450000	1150	319	603	1954	226,732	20	M36	2800
140	-	1950000	1050	373	758	2391	328,567	24	M36	2800
150	-	2750000	950	475	983	3069	540,298	30	M36	2800

■ = Standard
1) Space required to align the coupling or replace the sealing ring
2) Grease feeding for each coupling half

If requested, coupling is dynamically balanced (semi-key balancing G 6.3 with speed on requestof customer) For cercumferential speeds exceeding V=30 m/s, we would recommend dyn. balancing.

Ordering example:

GEARex® DA 80	d_1 Ø300	d_2 Ø300
Size and type of coupling	Finish bore with keyway to DIN 6885 sheet 1	Finish bore with keyway to DIN 6885 sheet 1

Type DA

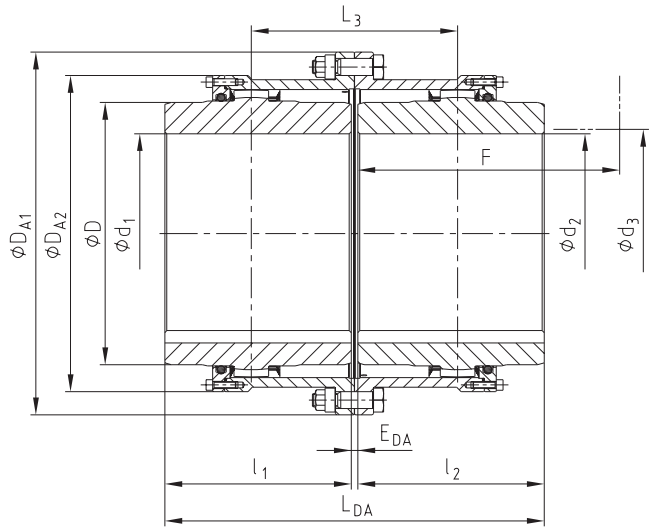

Type DB

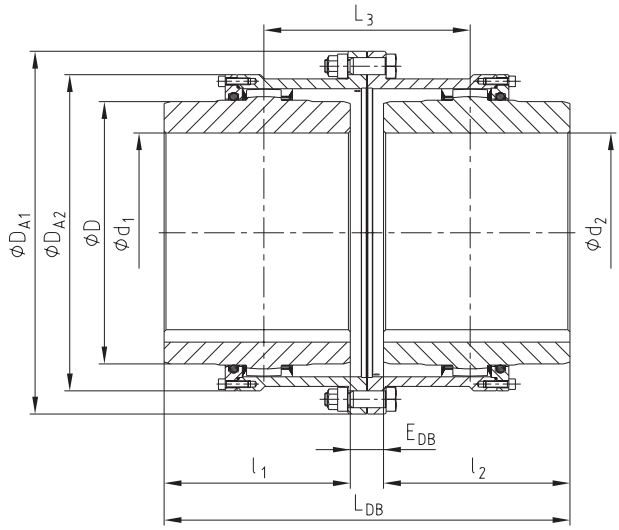

Type DAB

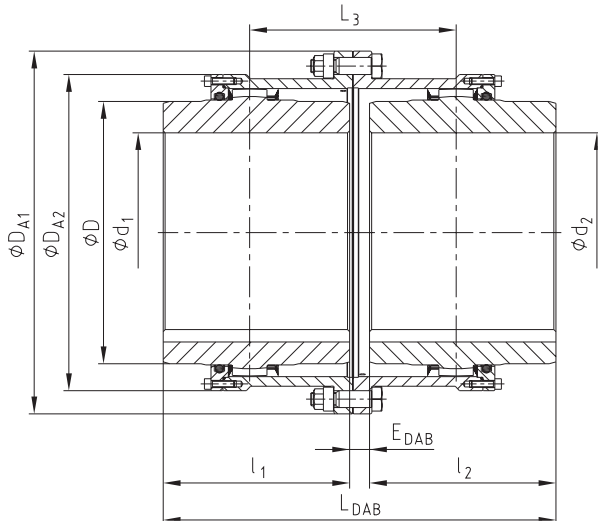

Large shaft distance dimension, high power density

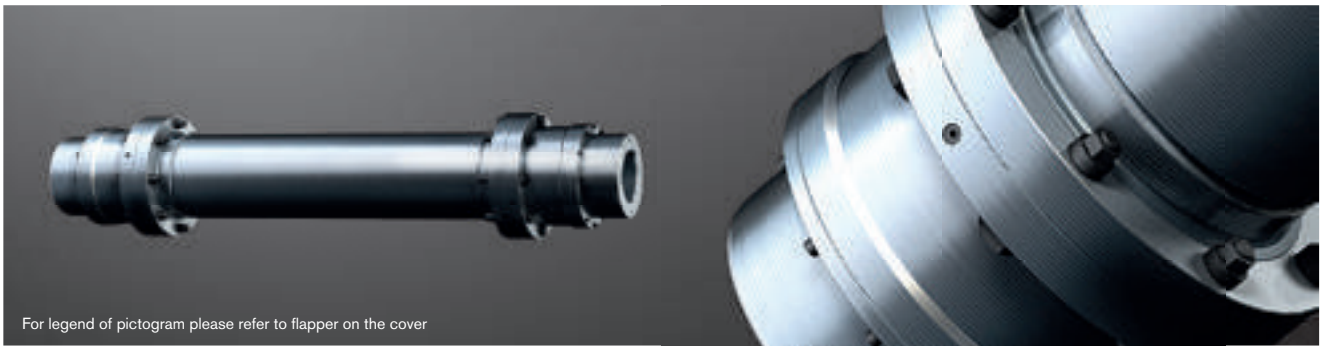

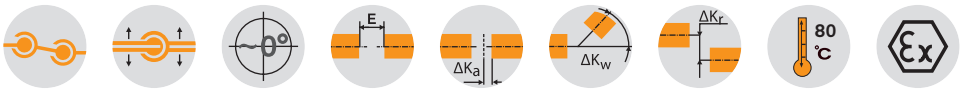

Dimensions

Size	Torque [Nm]		Pilot bore	Max. finish bore	Dimensions [mm]										Dowel screw (10.9)			Grease feeding [dm³] 2)
	T_{KN}	T_{KN} (42CrMo4)		d_1; d_2	l_1, l_2	Lengthened hub max. l_1, l_2	D	D_{A1} 3)	D_{A2} 3)	L_H	E_H	F 1)	d_3 1)	z	M	T_A [Nm]	
10	930	1580	26	50	43	105	67	111	84			74	52	6	M6	15	0,02
15	2000	3300	26	64	50	115	87	152	107			84	68	8	M8	36	0,04
20	3500	6300	31	80	62	130	108	178	130			104	85	6	M10	72	0,08
25	6500	11000	38	98	76	150	130	213	158			123	110	6	M12	125	0,12
30	10000	17400	44,5	112	90	170	153	240	182			148	130	8	M12	125	0,18
35	17000	28800	46	133	105	185	180	280	214			172	150	8	M14	200	0,22
40	28500	48500	52	158	120	215	214	318	250			192	175	8	M14	200	0,35
45	37000	62000	80	172	135	245	233	347	274			216	190	10	M14	200	0,45
50	51000	86000	80	192	150	295	260	390	309			241	220	8	M18	430	0,70
55	65000	110000	90	210	175	300	283	425,5	334			275	250	14	M18	430	0,90
60	85000	145000	100	232	190	305	312	457	365,5			316	265	14	M18	430	1,15
70	135000	240000	100	276	220	310	371	527	425			360	300	16	M20	610	1,50
80	175000	300000	140	300	280	-	394	545	475			340	310	18	M20	610	2,50
85	225000	380000	160	325	292	-	430	585	515			352	330	20	M20	610	3,00
90	290000	500000	180	350	305	-	464	640	560			365	360	20	M24	1000	4,00
100	380000	650000	220	390	330	-	512	690	612			390	400	24	M24	1000	5,00
110	480000	820000	220	420	350	-	560	765	665			410	420	20	M30	1700	6,00
120	620000	1050000	260	450	420	-	608	825	720			480	470	24	M30	1700	7,50
130	-	1450000	300	500	440	-	684	950	805			520	520	20	M36	2800	9,00
140	-	1950000	380	550	460	-	750	1020	875			570	590	24	M36	2800	12,00
150	-	2750000	460	630	520	-	850	1140	975			630	670	30	M36	2800	15,00

$L_H = E_H + l_1 + l_2$

As indicated by the customer

■ = Standard
1) Space required to align the coupling or replace the sealing ring
2) Grease feeding for each coupling half
3) For dimension type F see page 100. For type D see page 102.

Ordering example:

GEARex® FH 10	d_1 Ø50	d_2 Ø50	250
Size and type of coupling	Finish bore with keyway to DIN 6885 sheet 1	Finish bore with keyway to DIN 6885 sheet 1	Shaft distance dimension EH

Components

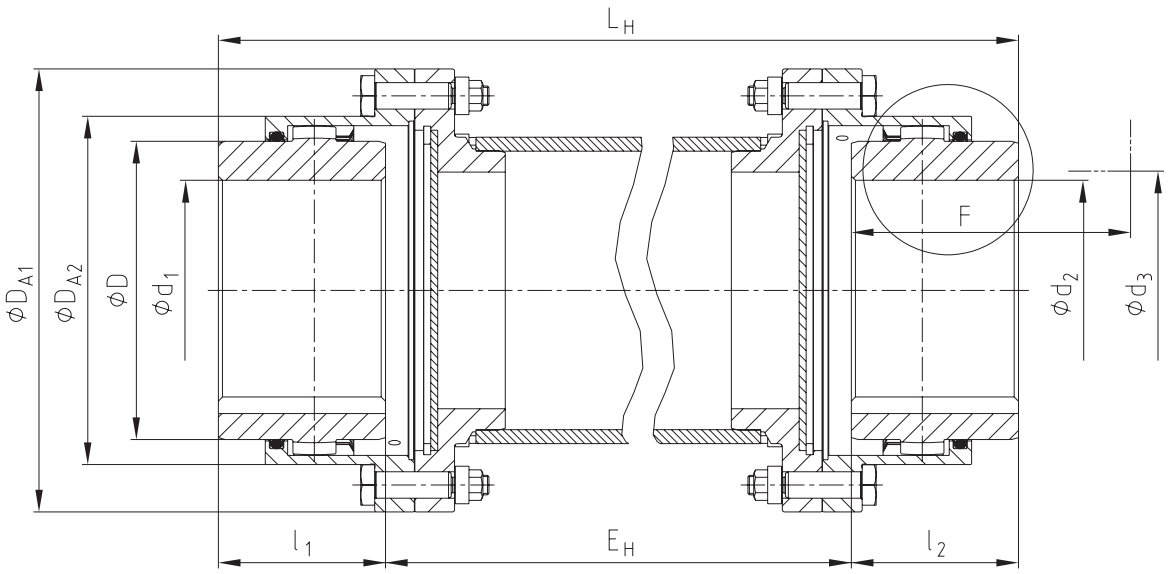

Types

Type FH

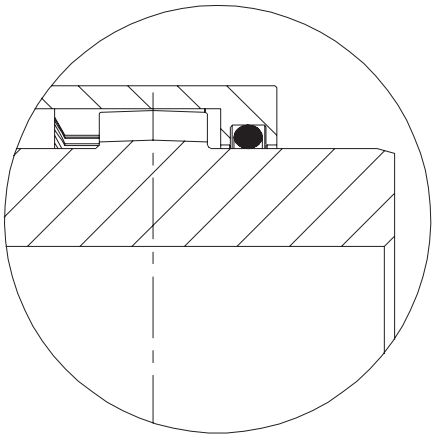

Type DH

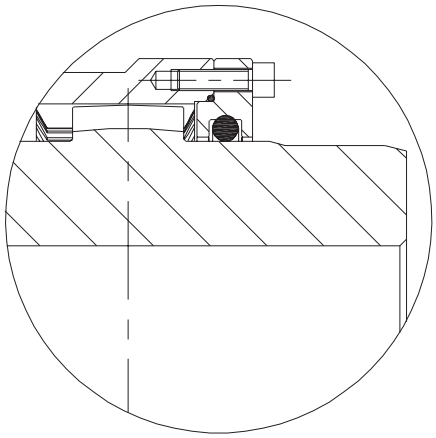

Single-cardanic, high power density

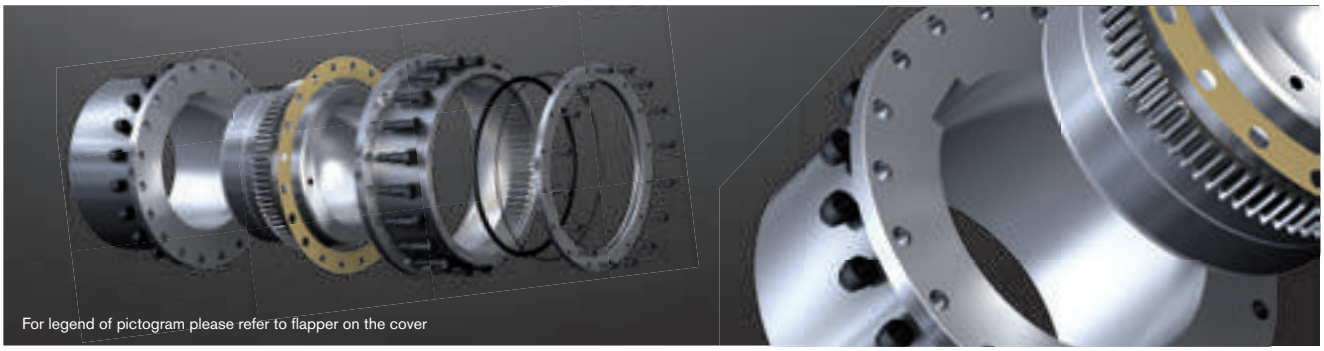

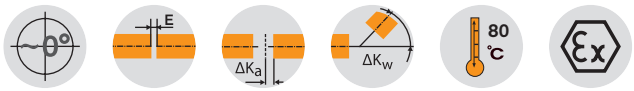

Dimensions

Size	Torque [Nm]		Maximum finish bore		Dimensions [mm]									Dowel screw (10.9)			Grease feeding [dm³]
	T_{KN}	T_{KN} (42CrMo4)	d_1	d_4	l_1, l_2	Lengthened hub max. l_1, l_2	D	D_{A1} [2]	D_{A2} [2]	D_F	L_R	F [1]	d_3 [1]	z	M	T_A [Nm]	
10	930	1580	50	60	43	105	67	111	84	84	88	74	52	6	M6	15	0,02
15	2000	3300	64	78	50	115	87	152	107	107	103	84	68	8	M8	36	0,04
20	3500	6300	80	95	62	130	108	178	130	130	127	104	85	6	M10	72	0,08
25	6500	11000	98	115	76	150	130	213	158	158	157	123	110	6	M12	125	0,12
30	10000	17400	112	135	90	170	153	240	182	182	185	148	130	8	M12	125	0,18
35	17000	28800	133	155	105	185	180	280	214	214	216	172	150	8	M14	200	0,22
40	28500	48500	158	185	120	215	214	318	250	250	244	192	175	8	M14	200	0,35
45	37000	62000	172	200	135	245	233	347	274	274	276	216	190	10	M14	200	0,45
50	51000	86000	192	225	150	295	260	390	309	309	305	241	220	8	M18	430	0,70
55	65000	110000	210	245	175	300	283	425,5	334	334	356	275	250	14	M18	430	0,90
60	85000	145000	232	265	190	305	312	457	365,5	365,5	386	316	265	14	M18	430	1,15
70	135000	240000	276	310	220	310	371	527	425	425	450	360	300	16	M20	610	1,50
80	175000	300000	300	340	280	-	394	545	475	462	570	340	310	18	M20	610	2,50
85	225000	380000	325	370	292	-	430	585	515	500	597	352	330	20	M20	610	3,00
90	290000	500000	350	400	305	-	464	640	560	546	623	365	360	20	M24	1000	4,00
100	380000	650000	390	440	330	-	512	690	612	594	673	390	400	24	M24	1000	5,00
110	480000	820000	420	480	350	-	560	765	665	647	710	410	420	20	M30	1700	6,00
120	620000	1050000	450	520	420	-	608	825	720	700	852	480	470	24	M30	1700	7,50
130	-	1450000	500	560	440	-	684	950	805	760	890	520	520	20	M36	2800	9,00
140	-	1950000	550	610	460	-	750	1020	875	835	930	570	590	24	M36	2800	12,00
150	-	2750000	630	690	520	-	850	1140	975	935	1055	630	670	30	M36	2800	15,00

■ = Standard
[1] Space required to align the coupling or replace the sealing ring
[2] Size model F see page 104. Model D see page 106.

If requested, coupling is dynamically balanced (semi-key balancing G 6.3 with speed on requestof customer) For cercumferential speeds exceeding V=30 m/s, we would recommend dyn. balancing.

Ordering example:

GEARex® FR 10	d_1 Ø50	d_4 Ø60
Size and type of coupling	Finish bore with keyway to DIN 6885 sheet 1	Finish bore with keyway to DIN 6885 sheet 1

Components

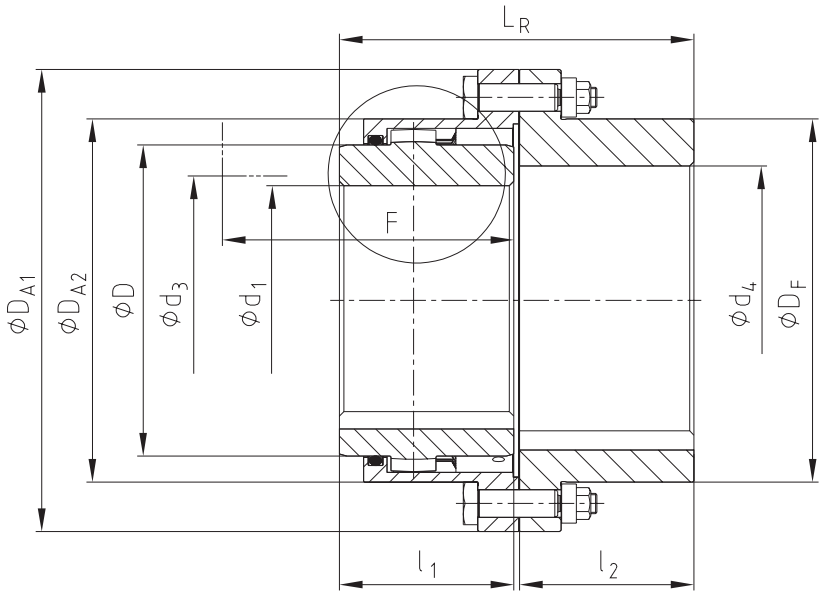

Types

Type FR

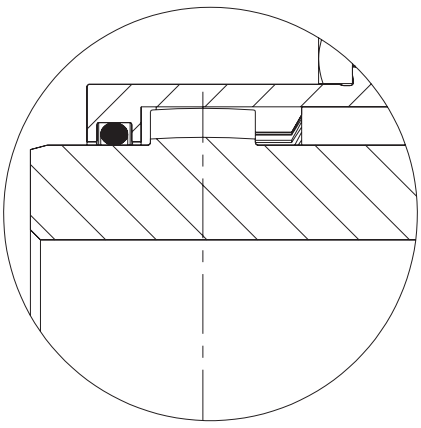

Type DR

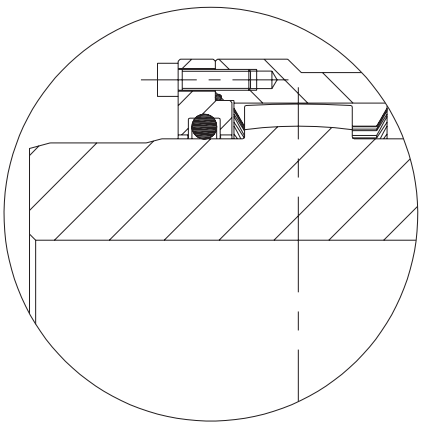

Displacements

Axial displacement

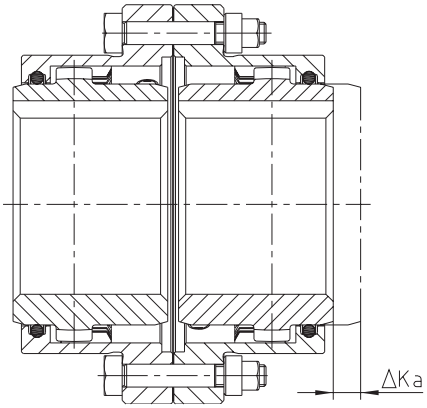

Radial displacement

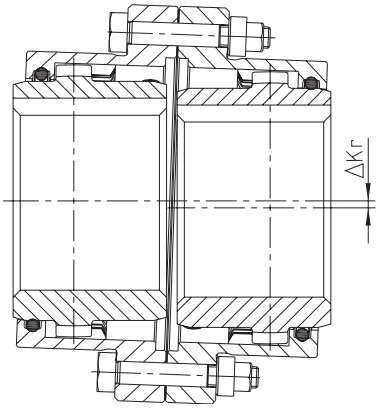

Angular displacement

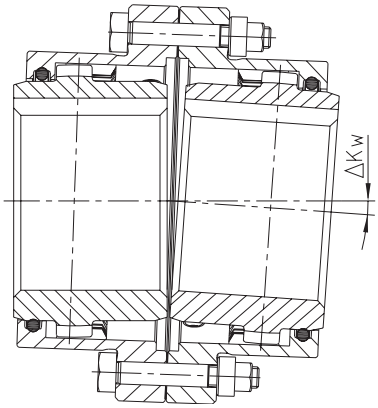

Displacements			
Size	Max. axial displacement ΔKa [mm]	Max. permissible displacements [1]	
		ΔKr [mm]	ΔKw [°]
10		± 0,4	
15		± 0,5	
20		± 0,6	
25	± 1,0	± 0,8	
30		± 1,0	
35		± 1,0	
40		± 1,2	
45		± 1,4	
50		± 1,6	
55	± 1,5	± 1,8	
60		± 2,0	0,5° per hub
70		± 2,2	
80		± 2,5	
85		± 2,8	
90	± 2,0	± 3,0	
100		± 3,2	
110		± 4,4	
120		± 5,5	
130		± 5,7	
140	± 2,5	± 6,0	
150		± 6,6	

[1] The displacement figures are maximum figures which must not occur in parallel. If both radial and angular displacement arises at the same time, these figures have to be reduced (see examples of calculation and diagramme).

Example 1:
ΔKr = 30%
ΔKw =70%

Example 2:
ΔKr = 60%
ΔKw = 40%

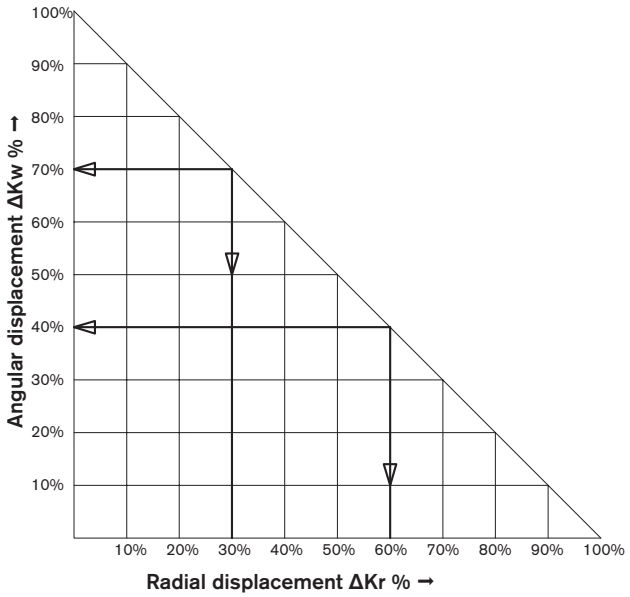

Flange dimensions in accordance with AGMA 9008-B00

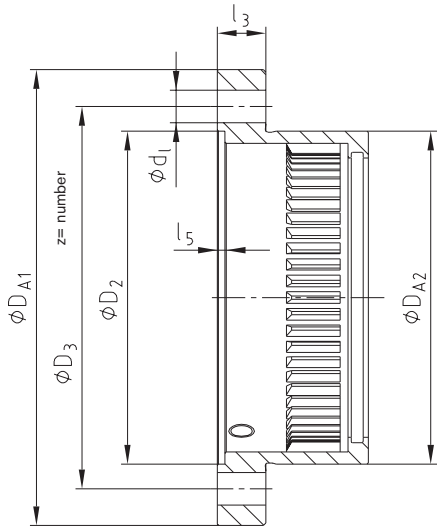

Flange dimensions								
Size	Dimensions [mm]							
	D_{A1}	D_{A2}	D_2	D_3	d_l	Number z	l_3	l_5
10	111	84	82	95,25	6,35	6	14	3
15	152	107	105	122,24	9,52	8	19	3
20	178	130	130	149,23	12,70	6	19	3
25	213	158	153	180,97	15,87	6	22	4
30	240	182	178	206,38	15,87	8	22	4
35	280	214	205	241,30	19,05	8	28,5	5
40	318	250	243	279,40	19,05	8	28,5	4
45	347	274	265	304,80	19,05	10	28,5	5,5
50	390	309	302	342,90	22,22	8	38	6
55	425,5	334	320	368,30	22,22	14	38	6
60	457	365,5	353	400,05	22,22	14	26	6
70	527	425	412	463,55	25,40	16	28,5	8

Other types

Type SD

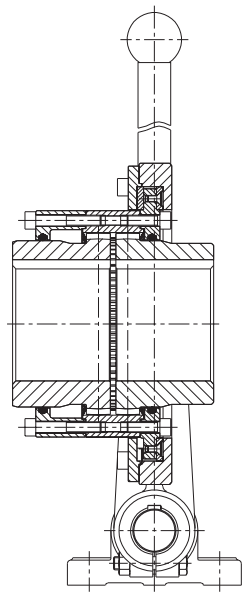

Type with brake disk

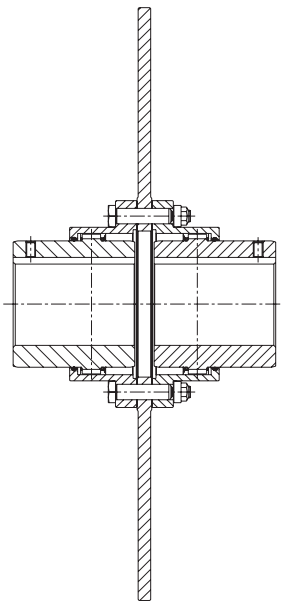

Type VD (vertical assembly)

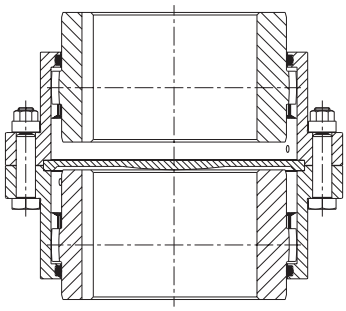



Backlash-free servo couplings

Types and operating description 116

ROTEX® GS
Structure and operation 118
Technical data and displacements 120
Hub designs 124
Basic programme 125
Standard types 126
Type Compact 128
Type clamping ring hubs light 130
Type clamping ring hubs steel 131
Type P according to DIN 69002 132
Type P with ETP clamping set 134
Type with expansion hub for hollow shaft connections 135
Type A-H drop-out center design couplings 136
Type DKM (double-cardanic) 138
Intermediate shaft coupling 140

TOOLFLEX®
Technical data 144
Types of hubs 145
Type S with thread for setscrews 146
Type M with thread for setscrews 147
Type S with clamping hubs 148
Type M with clamping hubs 150
Type KN 152
Type PI 154
Type CF 156
Type S-H / M-H 158
Type ZR 160

RADEX®-NC
Technical data 162
Standard types 163

COUNTEX®
Standard types 164

ROTEX® GS



TOOLFLEX®



RADEX®-NC



COUNTEX®



BACKLASH-FREE SERVO COUPLINGS
TYPES AND OPERATING DESCRIPTION

Properties of backlash-free couplings

				
Product	**ROTEX® GS**	**TOOLFLEX®**	**RADEX®-NC**	**COUNTEX®**
Type	Jaw-type coupling	Metall bellow-type coupling	Servo lamina coupling	Shaft encoder coupling
Properties				
Backlash-free	●	●	●	●
Torsionally rigid		●	●	●
Damping vibrations	●			
Maintenance-free	●	●	●	●
Axial plug-in	●	optional		●
Compensating for misalignment	●	●	●	●
Electric insulation	●			●
Fail-safe	●			
Shear type		●		
Special features				
Applications	Backlash-free drives			
Core industries	Machine tools, automation technology, drive technology, medical technology, packaging technology	Drive technology, automation technology, medical technology, packaging technology, machine tools	Automation technology, drive technology, packaging technology, machine tools, medical technology	Automation technology, drive technology, medical technology
Applications	Main spindles Control & positioning technology (screw drives with incline s<40, otherwise review by KTR) Gearboxes (for average to high transmission i≥7) Measuring and testing technology Miniature drives	Gearboxes (transmissions i<7) Miniature drives Control & positioning technology (screw drives with incline s≥40)	Gearboxes (transmissions i<7) Measuring & testing technology Miniature drives Control & positioning technology (screw drives with incline s≥40)	Measuring & control technology Miniature drives
Variation of components	very high	average	low	low
Torque range TKN [Nm]				
Min.	0,2	0,1	2,5	0,3
Max.	5.850	600	300	1,0
Max. circumferential speed v [m/s]				
Steel	depending on hub type up to 40	depending on hub type up to 40	35	–
	80 (type P)			
Aluminium	depending on hub type up to 50		35	40
Torsion spring stiffness C_T [Nm/rad]				
Up to	1.308.850	322.740	240.000	235
Radial spring stiffness C_R [N/mm]				
Up to	20.290	1.365		70
Spiders / bellow / laminas / spacer				
Material	Polyurethane, Hytrel	Stainless steel	Stainless steel	PEEK
Elastomer hardness	flexible to torsionally rigid	-	-	torsionally rigid
Temperature range [°C] min. / max.	- 50 / + 120	- 30 / + 100 (bonded)	- 30 / + 200	- 40 / + 160
		- 30 / + 200 (flanged/welded)		

● ≈ Standard

BACKLASH-FREE SERVO COUPLINGS
TYPES AND OPERATING DESCRIPTION

Product finder of backlash-free couplings



Product	ROTEX® GS	TOOLFLEX®	RADEX®-NC	COUNTEX®
Type	Jaw-type coupling	Metall bellow-type coupling	Servo lamina coupling	Shaft encoder coupling
Geometries				
Design	compact	compact, short	compact, short	short
Mass moment of inertia	low	low	low	low
Shaft distance dimension	average	average	average	low
Shaft-hub-connection				
Positive locking	●	optional	optional	optional
Non-positive (frictionally engaged)	●	●	●	●
Types (extract)				
Elastomers can be disassembled radially » with no need of displ. driving/driven side	A-H	-	-	-
Intermediate shaft type » bridging larger shaft distances	ZR1, ZR2, ZR3	-	-	-
Shaft-to-shaft connection	standard	standard	standard	standard
Flange-to-shaft connection	CFN, DFN, CF-DKM	CF	-	-
Flange-to-flange connection » particularly short mounting lengths	Optional	Optional	-	-
Single-cardanic	standard	-	EK	-
Double-cardanic » compensating for big displacements » lower restoring forces	DKM	standard	DK	standard
Certifications				
ATEX	●		●	●
Clean room	●	●	●	

● ≈ Standard

Twist angle

The diagram alongside this text clarifies the influence of ROTEX®, ROTEX® GS, RADEX®-NC and TOOLFLEX® couplings regarding backlash and torsion angle. Due to the high stiffness of RADEX®-NC and TOOLFLEX® the torsion angle is very low under torque. However, contrary to the flexible ROTEX® and the backlash-free ROTEX® GS a damping of torsional vibrations etc. is not possible.

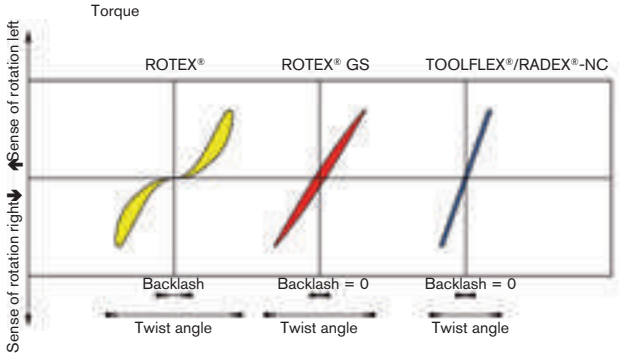

ROTEX® GS
Backlash-free jaw couplings

Technical description



ROTEX® GS is a three-part, axial plug-in coupling backlash-free under prestress. It is convincing even with critical applications by its backlash-free power transmission, its stiffness which is each adapted to the application and its optimum damping of vibrations. This principle of installation offers significant assembly possibilities which optimize the assembly times in production.

ROTEX® GS (straight tooth, backlash-free)

The straight spline of the spider mounted under prestress results in a smaller surface pressure and consequently higher stiffness of the coupling system. The flexible teeth compensate for misalignment but are supported radially in the inside diameter by a central web. This avoids too high internal or external deformation by high acceleration or high speeds. This is vital for a smooth operation and long service life of the coupling.

The pegs arranged reciprocally on the spider prevent the spider from touching the hub over the entire surface. Observing the distance dimension E ensures the ability of the coupling to compensate for displacements.

By observing the gap dimension „s“ the electrical insulation is ensured, as well as a high service life of the coupling. This fact is gaining more and more importance, due to the increasing precision of shaft encoders and the existing demand for electro-magnetic compatibility.

Limitation by concave cams in case of too high speeds/centrifugal forces and prestress of elastomer parts

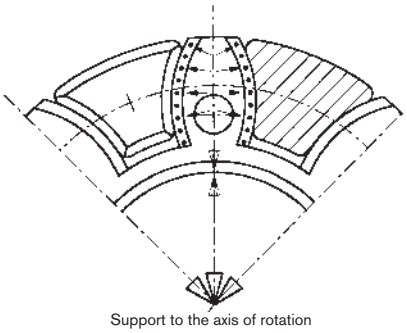

Support to the axis of rotation

Electric insulation due to gap dimension „s“

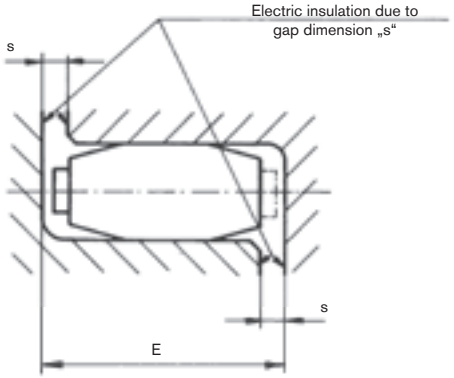

Notes

- Feather keyways available from a bore ≥Ø6. Feather keyways acc. to DIN 6885 sheet 1, tolerance JS9.
- Finish bore tolerance H7 (except for clamping hubs), from Ø55 G7 with clamping ring hubs
- Finish bore tolerance H6 for ROTEX® GS P
- Recommended insertion dimension of shafts into coupling hubs: l_1/l_2; for clamping ring hubs the minimum insertion dimension l3 applies
- Spider available with bore on request. Please specify in the order as shown in the example on page 126.

Use in explosive applications

ROTEX® GS couplings are suitable for power transmission in drives in hazardous areas. The couplings are certified and confirmed according to EC standard 94/9/EC (ATEX 95) as units of category 2G/2D and thus suitable for the use in hazardous areas of zone 1, 2, 21 and 22. Please read through our information included in the respective Type Examination Certificate and the operating and mounting instructions at www.ktr.com.

Selection: In case of use in hazardous areas the clamping ring hubs (clamping hubs without feather keyway only for use in category 3) must be selected such that there is a minimum safety factor of s = 2 between the peak torque (including all operating parameters) and the nominal torque and frictional torque of engagement of the coupling.

Spiders

The elastic spiders of the GS line are available in five different kinds of Shore hardness, identified by colour, the material being soft to hard. Due to these five spiders with different kinds of Shore hardness it is easily possible to adjust the ROTEX® GS with regard to torsional stiffness and the vibration behaviour to the individual conditions of an application. The flexible prestress varies depending on the coupling size, the spiders/material and the production tolerances. Resulting herefrom is the axial plug-in force starting from low as a close sliding fit or with torsionally soft spider, respectively, to heavy with high prestress or torsionally rigid spider (see mounting instruction KTR-N 45510 at www.ktr.com).
Along with an increasing hardness of the spider the torques to be transmitted and the stiffness of the spider increase, too. Along with a reduced hardness of the spider the ability of compensating for displacements and damping the spider is increased.

Properties						
Description of spider hardness [Shore]	Identification Colour	Material	Perm. temperature range [°C]		Available for coupling size	Typical applications
			Permanent temperature	Max. temperature short-term		
80 Sh-A-GS		Polyurethane	- 50 to + 80	- 60 to + 120	size 5 to 24	– drives of electric measuring systems
92 Sh-A-GS		Polyurethane	- 40 to + 90	- 50 to + 120	size 5 to 55	– drives of electric measuring and control systems – main spindle drives
98-Sh A-GS		Polyurethane	- 30 to + 90	- 40 to + 120	size 5 to 90	– positioning drives – main spindle drives – high load
64 Sh-D-H-GS		Hytrel	- 50 to + 120	- 60 to + 150	size 7 to 38	– planetary gears / backlash-free gears – higher torsion spring stiffness / high ambient temperatures
64 Sh-D-GS		Polyurethane	- 20 to + 110	- 30 to + 120	size 42 to 90	– higher load – higher torsion spring stiffness
72 Sh-D-H-GS		Hytrel	- 50 to + 120	- 60 to + 150	size 24 to 38	– very high torsion spring stiffness / high ambient temperature – very high load
72 Sh-D-GS		Polyurethane	- 20 to + 110	- 30 to + 120	size 42 to 90	– very high torsion spring stiffness – very high load

Degree of hardness

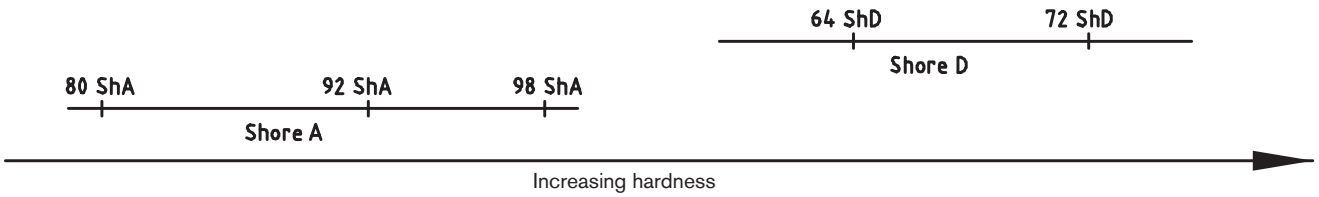

Spider material	Polyurethane			Hytrel
Degree of hardness	92 Shore-A	98 Shore-A	64 Shore-D	64 Shore-D
Relative Damping ψ [-]	0,80	0,80	0,75	0,60
Resonance factor VR [-]	7,90	7,90	8,50	10,5

Technical data

Size	Spider Shore GS	Shore range	Max. speed [rpm] for type						Torque [Nm]		Static torsion spring stiffness [1] [Nm/rad]	Dynamic torsion spring stiffness [1] [Nm/rad]	Radial spring stiffness Cr [N/mm]	Weight [kg]		Mass moment of inertia J [kgm²]	
			2.0 / 2.1 2.5 / 2.6	2.8 2.9	1.0 1.1	6.0 light [2]	6.0 P [2]	DKM	T_{KN}	$T_{K\,max}$				Each hub [5]	Spider	Each hub [5]	Spider
5	70	A	38000	38000	47700			57300	0,2	0,3	1,78	5	43	0,001	0,2 x 10⁻³	0,015 x 10⁻⁶	0,002 x 10⁻⁶
	80	A							0,3	0,6	3,15	10	82				
	92	A							0,5	1,0	5,16	16	154				
	98	A							0,9	1,7	8,3	25	296				
7	80	A	27000	27000	34100			40900	0,7	1,4	8,6	26	114	0,003	0,7 x10⁻³	0,085 x 10⁻⁶	0,01 x 10⁻⁶
	92	A							1,2	2,4	14,3	43	219				
	98	A							2,0	4,0	22,9	69	421				
	64	D							2,4	4,8	34,3	103	630				
8	80	A		23800					0,7	1,4	8,8	27	117	0,003	0,5 x10⁻³	0,117 x 10⁻⁶	0,0124 x10⁻⁶
	98	A							2,0	4,0	23,5	71	433				
	64	D							2,4	4,8	35,3	106	648				
9	80	A	19000	19000	23800			28600	1,8	3,6	17,2	52	125	0,01	1,7 x 10⁻³	0,48 x 10⁻⁶	0,085 x 10⁻⁶
	92	A							3,0	6,0	31,5	95	262				
	98	A							5,0	10,0	51,6	155	518				
	64	D							6,0	12,0	74,6	224	739				
12	80	A	15200	15200	19100			22900	3,0	6,0	84,3	252	274	0,02	2,3 x 10⁻³	1,5 x 10⁻⁶	0,139 x 10⁻⁶
	92	A							5,0	10,0	160,4	482	470				
	98	A							9,0	18,0	240,7	718	846				
	64	D							12,0	24,0	327,9	982	1198				
13	80	A		12700					3,6	7,2	111	330	359	0,01	2,0 x10⁻³	1,1 x 10⁻⁶	0,155 x 10⁻⁶
	98	A							11,0	22,0	316	941	1109				
	64	D							14,5	29,0	430	1287	1570				
14	80	A	12700	12700	15900	32000	47700	19100	4,0	8,0	60,2	180	153	0,02	4,7 x 10⁻³	2,8 x 10⁻⁶	0,509 x 10⁻⁶
	92	A							7,5	15,0	114,6	344	336				
	98	A							12,5	25,0	171,9	513	654				
	64	D							16,0	32,0	234,2	702	856				
16	80	A		12000					5,0	10,0	157	471	400	0,02	3,6 x10⁻³	2,8 x 10⁻⁶	0,435 x10⁻⁶
	98	A							15,0	30,0	450	1341	1710				
	64	D							19,0	38,0	612	1835	2238				
19	80	A	9550	9550	11900	24000	35800	14300	6,0	12,0	618	1065	582	0,09	7,6 x10⁻³	19,5 x 10⁻⁶	1,35 x 10⁻⁶
	92	A							12,0	24,0	1090	1815	1120				
	98	A							21,0	42,0	1512	2540	2010				
	64	D							26,0	52,0	2560	3810	2930				
24	92	A	6950	10400	8650	17000	26000	10400	35	70	2280	4010	1480	0,2	0,02	81,9 x 10⁻⁶	6,7 x 10⁻⁶
	98	A							60	120	3640	5980	2560				
	64	D							75	150	5030	10896	3696				
	72 [3]	D							97	194	9944	17095	5799				
28	92	A	5850	8800	7350	15000	22000	8800	95	190	4080	6745	1780	0,3	0,03	184,2 x 10⁻⁶	14,85 x 10⁻⁶
	98	A							160	320	6410	9920	3200				
	64	D							200	400	10260	20177	4348				
	72 [3]	D							260	520	21526	36547	7876				
38	92	A	4750	7150	5950	12000	17900	7150	190	380	6525	11050	2350	0,6	0,05	542,7 x 10⁻⁶	39,4 x 10⁻⁶
	98	A							325	650	11800	17160	4400				
	64	D							405	810	26300	40335	6474				
	72 [3]	D							525	1050	44584	71180	11425				
42	92	A	4000		5000	10000 8050 [4]	15000	6000	265	530	10870	15680	2430	2,4	0,08	2802 x 10⁻⁶	85 x 10⁻⁶
	98	A							450	900	21594	37692	5570				
	64	D							560	1120	36860	69825	7270				
	72 [3]	D							728	1456	58600	93800	9766				
48	92	A	3600		4550	9100 7200 [4]	13600	5450	310	620	12968	18400	2580	3,3	0,09	4709 x 10⁻⁶	135 x 10⁻⁶
	98	A							525	1050	25759	45620	5930				
	64	D							655	1310	57630	99750	8274				
	72 [3]	D							852	1704	80000	136948	11359				
55	92	A	3150		3950	6350 [4]	11900	4750	410	820	15482	21375	2980	5,1	0,12	9460 x 10⁻⁶	229 x 10⁻⁶
	98	A							685	1370	42117	61550	6686				
	64	D							825	1650	105730	130200	9248				
	72 [3]	D							1072	2144	150000	209530	12762				
65	98	A	2800		3500	5650 [4]	11000		940	1880	48520	71660	6418	6,7	0,2	15143 x 10⁻⁶	437 x 10⁻⁶
	64	D							1175	2350	118510	189189	8870				
	72 [3]	D							1527	3054	160000	310000	11826				
75	98	A	2350		2950	4750 [4]	8950		1920	3840	79150	150450	8650	10,5	0,3	32750 x 10⁻⁶	1179 x 10⁻⁶
	64	D							2400	4800	182320	316377	11923				
	72 [3]	D							3120	6240	360540	586429	16454				
90	98	A	1900		2380	3800 [4]	7150		3600	7200	204500	302900	10700	18,2	0,6	87099 x 10⁻⁶	3362 x 10⁻⁶
	64	D							4500	9000	429450	908700	14700				
	72 [3]	D							5850	11700	847440	1308852	20290				

[1] Static and dynamic torsion spring stiffness with 0,5 x T_{KN}
[2] Higher speeds on request
[3] With the use of the 72Sh-D spider we recommend to use hubs made of steel
[4] Clamping ring hubs 6.0 made of steel
[5] Hubs with an average bore type 1.0
The coupling has to be dimensioned in a way that the permissible coupling load is not exceeded with any operating condition. (see coupling selection on page 18 et seqq.).
The torques TKN/TKmax specified refer to the spider. The shaft-hub-connection has to be investigated by the customer.

Notes for displacements

Axial displacement

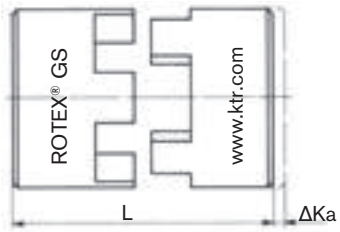

Radial displacement

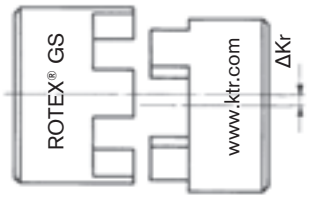

Angular displacement

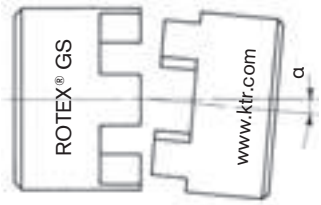

Due to its design the ROTEX® GS is able to absorb axial, angular and radial displacement, without causing any wear or premature failure of the coupling. As the spider is only stressed under pressure it is ensured that the coupling will remain backlash-free even after a longer operation period.

As an example, axial displacement may be produced by different tolerances of the connecting elements during the assembly or by alteration of the shaft length if fluctuation of temperature occurs. As the shaft bearings usually cannot be axially stressed to a big extent, it is the task of the coupling to compensate for this axial displacement and to keep the reaction forces low.

In case of pure angular displacement the imagined bisecting lines of the shafts intersect in the middle of the coupling. Up to a certain permissible extent this displacement can be absorbed by the coupling without any danger of extensive restoring forces.

Radial displacement results from parallel displacement of the shafts towards each other, caused by different tolerances at the centerings or by mounting of the power packs on different levels. Due to the kind of displacement the largest restoring forces are produced here, consequently causing the highest stresses for the adjacent components.

In case of larger displacements (especially radial displacements) the ROTEX® GS DKM double-cardanic design should be applied in order to avoid excessive restoring forces.

The above-mentioned permissible displacement figures of the flexible ROTEX® GS couplings are standard values, considering the coupling load up to the rated torque TKN of the coupling and with an ambient temperature of + 30 °C. The ROTEX® GS couplings are able to compensate for axial, radial and angular displacements. Careful and accurate alignment of the shafts increases the service life of the coupling.

Axial displacement

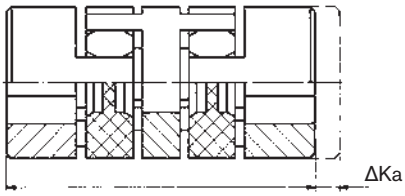

Radial displacement

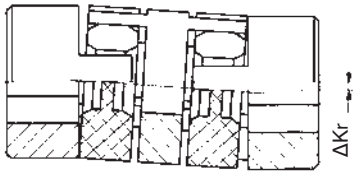

Angular displacement

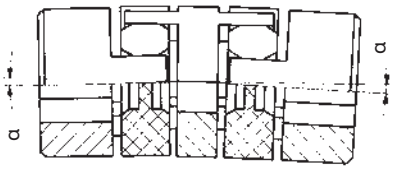

Shaft misalignment ROTEX® GS type DKM

This design reduces the restoring forces arising with radial displacement to a minimum, due to the double-jointed operation, additionally the coupling is able to compensate for higher axial and angular misalignment.

Displacements

Displacements							
Size	Spider GS	Displacements standard			Displacements DKM		
		[mm] axial ΔKa[1)]	[mm] radial ΔKr	[degree] angular α	[mm] axial ΔKa[1)]	[mm] radial ΔKr	[degree] angular α
5	70 Sh-A	+0,4 -0,2	0,14	1,2°	+0,4 -0,4	0,17	1,2°
	80 Sh-A		0,12	1,1°		0,15	1,1°
	92 Sh-A		0,06	1,0°		0,14	1,0°
	98 Sh-A		0,04	0,9°		0,13	0,9°
7	80 Sh-A	+0,6 -0,3	0,15	1,1°	+0,6 -0,6	0,23	1,1°
	92 Sh-A		0,10	1,0°		0,21	1,0°
	98 Sh-A		0,06	0,9°		0,19	0,9°
	64 Sh-D		0,04	0,8°		0,17	0,8°
8	80 Sh-A	+0,6 -0,5	0,15	1,1°	—	—	—
	98 Sh-A		0,08	0,9°			
	64 Sh-D		0,06	0,8°			
9	80 Sh-A	+0,8 -0,4	0,19	1,1°	+0,8 -0,8	0,29	1,1°
	92 Sh-A		0,13	1,0°		0,26	1,0°
	98 Sh-A		0,08	0,9°		0,24	0,9°
	64 Sh-D		0,05	0,8°		0,21	0,8°
12	80 Sh-A	+0,9 -0,4	0,20	1,1°	+0,9 -0,9	0,35	1,1°
	92 Sh-A		0,14	1,0°		0,32	1,0°
	98 Sh-A		0,08	0,9°		0,29	0,9°
	64 Sh-D		0,05	0,8°		0,25	0,8°
13	80 Sh-A	+0,9 -0,8	0,20	1,1°	—	—	—
	98 Sh-A		0,08	0,9°			
	64 Sh-D		0,05	0,8°			
14	80 Sh-A	+1,0 -0,5	0,21	1,1°	+1,0 -1,0	0,40	1,1°
	92 Sh-A		0,15	1,0°		0,37	1,0°
	98 Sh-A		0,09	0,9°		0,33	0,9°
	64 Sh-D		0,06	0,8°		0,29	0,8°
16	80 Sh-A	+1,0 -0,8	0,21	1,1°	—	—	—
	98 Sh-A		0,10	0,9°			
	64 Sh-D		0,08	0,8°			
19	80 Sh-A	+1,2 -0,5	0,15	1,1°	+1,2 -1,0	0,49	1,1°
	92 Sh-A		0,10	1,0°		0,45	1,0°
	98 Sh-A		0,06	0,9°		0,41	0,9°
	64 Sh-D		0,04	0,8°		0,36	0,8°
24	92 Sh-A	+1,4 -0,5	0,14	1,0°	+1,4 -1,0	0,59	1,0°
	98 Sh-A		0,10	0,9°		0,53	0,9°
	64 Sh-D		0,07	0,8°		0,47	0,8°
	72 Sh-D		0,04	0,7°		0,42	0,7°
28	92 Sh-A	+1,5 -0,7	0,15	1,0°	+1,5 -1,4	0,66	1,0°
	98 Sh-A		0,11	0,9°		0,60	0,9°
	64 Sh-D		0,08	0,8°		0,53	0,8°
	72 Sh-D		0,05	0,7°		0,46	0,7°
38	92 Sh-A	+1,8 -0,7	0,17	1,0°	+1,8 -1,4	0,77	1,0°
	98 Sh-A		0,12	0,9°		0,69	0,9°
	64 Sh-D		0,09	0,8°		0,61	0,8°
	72 Sh-D		0,06	0,7°		0,54	0,7°
42	92 Sh-A	+2,0 -1,0	0,19	1,0°	+2,0 -2,0	0,84	1,0°
	98 Sh-A		0,14	0,9°		0,75	0,9°
	64 Sh-D		0,10	0,8°		0,67	0,8°
	72 Sh-D		0,07	0,7°		0,59	0,7°
48	92 Sh-A	+2,1 -1,0	0,23	1,0°	+2,1 -2,0	0,91	1,0°
	98 Sh-A		0,16	0,9°		0,82	0,9°
	64 Sh-D		0,11	0,8°		0,73	0,8°
	72 Sh-D		0,08	0,7°		0,64	0,7°
55	92 Sh-A	+2,2 -1,0	0,24	1,0°	+2,2 -2,0	1,01	1,0°
	98 Sh-A		0,17	0,9°		0,91	0,9°
	64 Sh-D		0,12	0,8°		0,81	0,8°
	72 Sh-D		0,09	0,7°		0,71	0,7°
65	98 Sh-A	+2,6 -1,0	0,18	0,9°	—	—	—
	64 Sh-D		0,13	0,8°			
	72 Sh-D		0,10	0,7°			
75	98 Sh-A	+3,0 -1,5	0,21	0,9°	—	—	—
	64 Sh-D		0,15	0,8°			
	72 Sh-D		0,11	0,7°			
90	98 Sh-A	+3,4 -1,5	0,23	0,9°	—	—	—
	64 Sh-D		0,17	0,8°			
	72 Sh-D		0,13	0,7°			

[1)] The Ka figures mentioned above have to be added to the length of the respective coupling type.

Displacements of intermediate shaft coupling

Displacements of intermediate shaft coupling			
ROTEX® GS size with 98 Sh-A-GS	Axial ΔK_a [mm]	Radial ΔK_r [1] [mm]	Angular α [degree]
14	+1,0 / -1,0	15	0,9°
19	+1,2 / -1,0	14	0,9°
24	+1,4 / -1,0	14	0,9°
28	+1,5 / -1,4	14	0,9°
38	+1,8 / -1,4	14	0,9°
42	+2,0 / -2,0	14	0,9°
48	+2,1 / -2,0	13	0,9°
55	+2,2 / -2,0	13	0,9°
65	+2,6 / -2,0	13	0,9°

1) Radial displacements based on a coupling length LZR = 1000 mm

Axial displacement

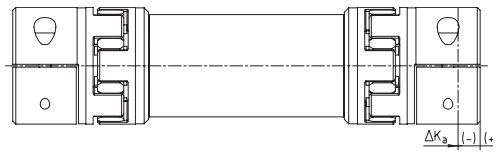

Radial displacement

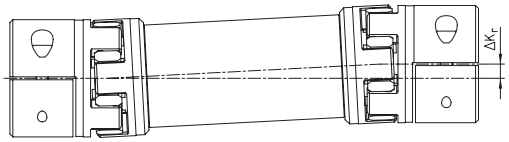

$$\Delta K_r = (L_{ZR} - 2 \bullet l_1 - E) \cdot \tan \alpha$$

Angular displacement

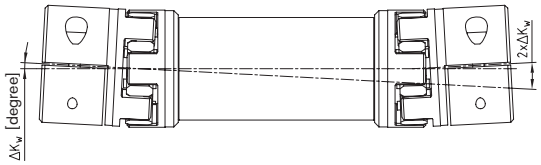

Calculation of overall torsion spring stiffness:

$$C_{total.} = \frac{1}{2 \bullet \frac{1}{C_1} + \frac{L_{pipe}}{C_2}} \quad [Nm/rad]$$

$$\text{with } L_{pipe} = \frac{L_{ZR} - 2 \bullet L}{1000\ [m]}$$

C_1 = torsion spring stiffness for spider see page 120
C_2 = from table on page 140-143

Chart of critical bending speeds for type ZR3

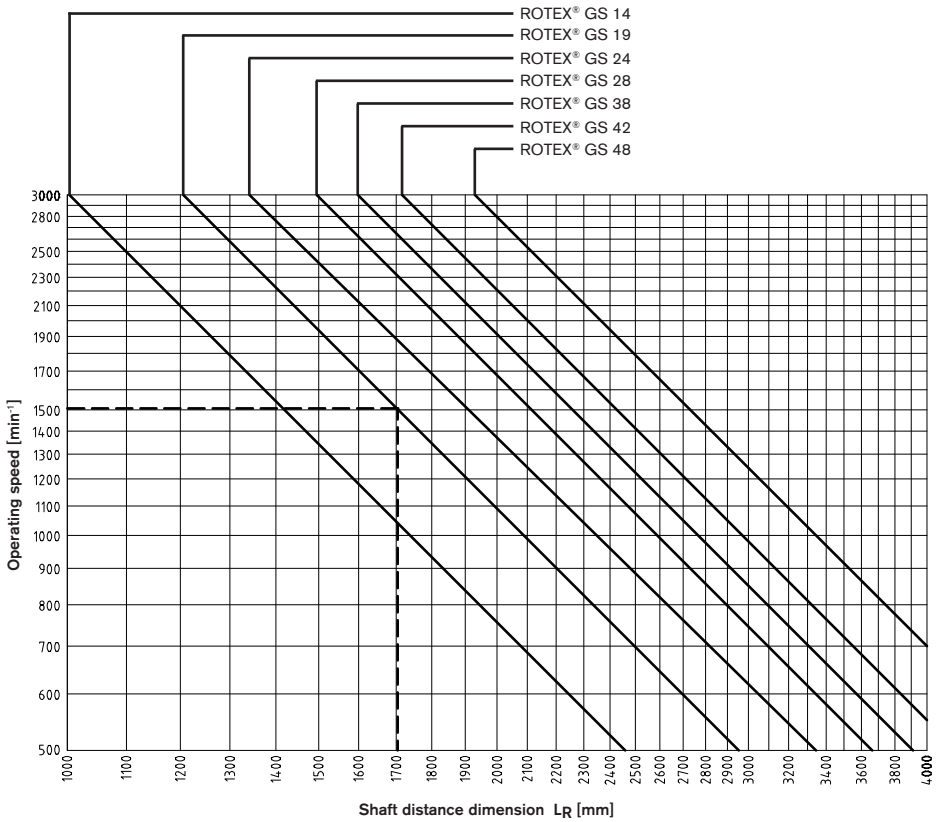

Example:
ROTEX® GS 19
Operating speed: 1500 min^{-1}
Max. permissible shaft distance dimension:: 1700 mm
Operating speed = n_{krit}/1,4

Hub types

Due to the numerous applications of ROTEX® GS for many different mounting situations, this coupling system is available with various hub types. The different hub types can be combined optionally within one size.

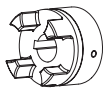

Type 1.0
with feather keyway and setscrew

Positive locking power transmission, permissible torque depending on the permissible surface pressure. Not suitable for backlash-free power transmission with heavily reversing operation.

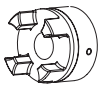

Type 1.1 without keyway, with setscrew

Non-positive torque transmission, suitable for backlash-free transmission of very small torques. (For ATEX category 3 only)



Type 2.0 clamping hub, single slotted, without feather keyway

Frictionally engaged, backlash-free shaft-hub-connection-. Transmittable torques depending on bore diameter Type 2.0 up to size 14 as standard. (For ATEX category 3 only)



Type 2.1 clamping hub, single slotted, with feather keyway

Positive locking power transmission with additional frictionally engaged condition. The frictionally engaged condition prevents or reduces reverse backlash, respectively. Surface pressure of the keyway connection is reduced. Type 2.1 up to size 14 as standard.



Type 2.5 Clamping hub double slot, without feather keyway

Frictionally engaged, backlash-free shaft-hub-connection-. Transmittable torques depending on bore diameter Type 2.5 from size 19 as standard. (For ATEX category 3 only)



Type 2.6 Clamping hub double slot, with feather keyway

Positive locking power transmission with additional frictionally engaged condition. The frictionally engaged condition prevents or reduces reverse backlash, respectively. Surface pressure of the keyway connection is reduced. Type 2.5 from size 19 as standard.



Type 2.8 short clamping hub C with axial slots without feather keyway

Frictionally engaged, backlash-free shaft-hub-connection, good properties of concentric running. Transmittable torques depending on bore diameter Type 2.8 from size 24 as standard. Size 7-19 type 2.8 single slotted (for ATEX cat. 3 only)



Type 2.9 short clamping hub C with axial slots with feather keyway

Positive locking power transmission with additional frictionally engaged condition. Surface pressure of the keyway connection is reduced. Type 2.9 from size 24 as standard, size 7-19 type. 2.9 single slotted.



Type 6.0 Clamping ring hub

Integrated frictionally engaged shaft-hub-connection for transmitting higher torques. Screwing on elastomer side. For details about torque and dimensions see page 130/131. Suitable for high speeds.



Type 6.0 P Precision clamping ring hub

Operating principle equal to type 6.0, but highly accurate machining with slight modifications of design, see page 132.



Type Design 7.5 clamping hub type DH without feather keyway for double-cardanic connections

Frictionally engaged, backlash-free shaft-hub-connection for radial assembly of coupling. Transmittable torques depending on bore diameter For torques see page 140.



Type 7.6 clamping hub type DH with feather keyway for double-cardanic connections

Positive shaft-hub connection with additional frictional engagement for the radial assembly of the coupling. The frictional engagement avoids or reduces the reverse backlash. Surface pressure of the keyway connection is reduced.



Type 7.8 clamping hub type H without feather keyway, single-cardanic connection



Type 7.9 clamping hub type H with feather keyway for singe-cardanic connection

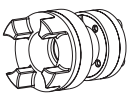

Type 4.2 with CLAMPEX® KTR 250

Frictionally engaged shaft-hub-connection to transmit high torques with clamping screws externally

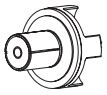

Type 9.0 expansion hub

Frictionally engaged connection for hollow shaft. Transmittable torques depend on the bore diameter and the hollow shaft.

Special designs on request of customers

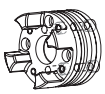

Type 6.5 Clamping ring hub

Design equal to 6.0, but clamping screws on the outside. As an example for radial disassembly of intermediate pipe (special design).

Stock programme

Finish bore [mm] according to ISO fit H7 / feather keyway with thread according to DIN 6885 sheet 1 - JS9																																
Size	Hub type	Un-/pilot bored	Ø2	Ø3	Ø4	Ø5	Ø6	Ø 6,35	Ø7	Ø8	Ø9	Ø9,5	Ø10	Ø11	Ø12	Ø14	Ø15	Ø16	Ø18	Ø19	Ø20	Ø22	Ø24	Ø25	Ø28	Ø30	Ø32	Ø35	Ø38	Ø40	Ø42	Ø45
	1.1	●			●	●	●																									
7	2.0	●		●	●	●	●	●	●																							
	2.8	●																														
8	2.8	●		●	●	●	●		●	●																						
	1.0	●					●			●	●		●																			
	1.1	●			●	●	●		●	●			●																			
9	2.0	●		●	●	●	●	●	●	●	●	●	●	●																		
	2.1	●					●			●	●		●																			
	2.8	●																														
	1.0	●													●																	
	1.1	●																														
12	2.0	●			●	●	●	●		●	●		●	●	●																	
	2.1	●											●		●																	
	2.8	●																														
13	2.8	●					●			●			●		●																	
	1.0	●					●			●	●		●	●	●	●	●	●														
	1.1	●					●			●			●	●	●	●																
	2.0	●			●	●	●	●	●	●	●	●	●	●	●	●	●	●														
14	2.1	●								●	●		●	●	●	●	●	●														
	2.8	●								●	●		●	●																		
	6.0 light						●			●	●		●	●	●	●																
	6.0 P															●																
16	2.8	●								●			●			●		●														
	1.0	●											●	●	●	●	●	●	●	●	●	●	●									
	2.5	●				■				●		●	●	●	●	●	●	●	●	●	●	●[1]	●[1]									
	2.6	●								●			●	●	●	●	●	●	●	●	●		●[1]									
19	2.8	●									●		●	●		●	●	●	●	●	●		●									
	6.0 light												●	●	●	●	●	●	●	●	●											
	6.0 steel															●		●		●												
	6.0 P37.5																	●														
	6.0 P																			●												
	1.0	●													●	●	●	●	●	●	●	●	●	●	●							
	2.5	●								■					●	●	●	●	●	●	●	●	●	●	●							
	2.6	●													●	●		●	●	●	●	●	●	●	●							
24	2.8															●	●	●		●	●		●	●	●	●						
	6.0 light													●		●	●	●	●	●	●	●	●	●	●							
	6.0 steel																					●	●	●	●							
	6.0 P 50																						●									
	6.0 P																							●								
	1.0	●																		●	●	●	●	●	●	●	●	●				
	2.5	●											■						●	●	●	●	●	●	●	●	●	●				
	2.6	●																●			●	●	●	●	●	●	●	●				
28	2.8																			●		●	●	●	●	●		●				
	6.0 light																		●	●	●	●	●	●	●	●	●	●				
	6.0 steel																					●	●	●	●	●	●	●				
	6.0 P																					●					●	●				
	1.0	●																			●			●	●	●	●	●	●	●		
	2.5	●												■										●			●	●	●	●		
	2.6	●																			●			●	●	●	●	●	●			
38	2.8																				●			●	●		●	●		●		
	6.0 light																				●	●	●	●	●	●	●	●	●	●	●	●
	6.0 steel																							●	●	●	●	●	●	●		●
	6.0 P																										●		●	●		

Taper bores for Fanuc motors:
GS 19 1:10 Ø 11
GS 24 1:10 Ø 16
[1] Type 2.0/2.1

Finish bores [mm]																	
Size	Hub type	Ø28	Ø30	Ø32	Ø35	Ø38	Ø40	Ø42	Ø45	Ø48	Ø50	Ø55	Ø60	Ø65	Ø70	Ø80
42	6.0 light	●		●	●	●		●	●		●					
	6.0 steel	●	●	●	●	●	●	●	●	●	●					
48	6.0 light			●			●		●	●		●				
	6.0 steel			●	●	●	●	●	●	●	●	●				
55	6.0 steel					●	●	●	●	●	●	●	●			
65	6.0 steel						●	●	●	●	●	●		●	●	
75	6.0 steel										●	●	●	●	●	●
90	6.0 steel	Bores on request														

■ = Pilot bored clamping hubs
● = Standard bore from stock
Unbored hubs up to size 65 available from stock.
Other dimensions on request

ROTEX® GS
Backlash-free jaw couplings

Standard types

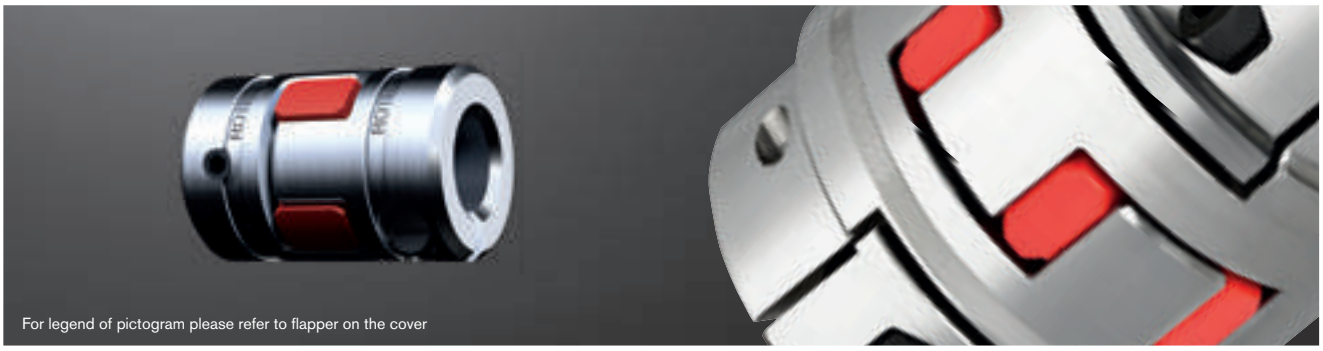

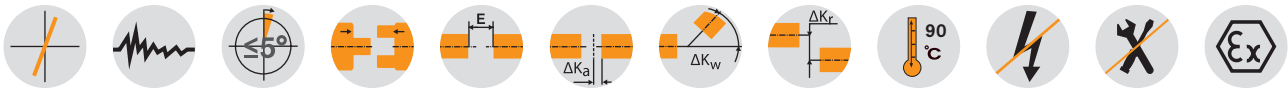

ROTEX® GS 5 - 38

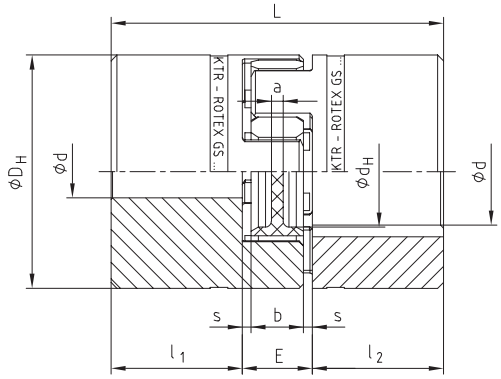

ROTEX® GS 42 - 90

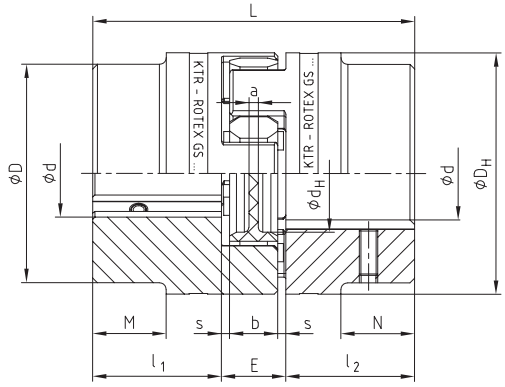

Hub types:

Type 1.0

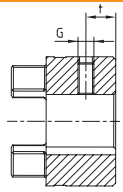

with keyway
and set screw

Type 1.1

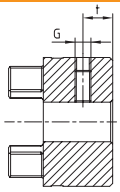

without keyway and with
set screw

Type 1.2

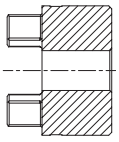

without keyway and
without set screw

ROTEX® GS standard types For size 5 to 38 hub material aluminium/for size 42 to 90 hub material steel

Size	Spider torque T_{KN} [Nm] for 98Sh-A[1)]	Maximum finish bore Ød for hub type			Dimensions [mm]										Setscrew DIN EN ISO 4029 hub type 1.0/1.1		
		1.0	1.1	1.2	D	D_H	d_H	L	l_1;l_2	M;N	E	b	s	a	G	t	T_A
5	0,9	-	6	5	–	10	—	15	5	–	5	4	0,5	4,0	M2	2,5	0,35
7	2,0	7	7	7	–	14	—	22	7	–	8	6	1,0	6,0	M3	3,5	0,6
9	5,0	10	11	11	–	20	7,2	30	10	–	10	8	1,0	1,5	M4	5,0	1,5
12	9,0	12	12	12	–	25	8,5	34	11	–	12	10	1,0	3,5	M4	5,0	1,5
14	12,5	16	16	16	–	30	10,5	35	11	–	13	10	1,5	2,0	M4	5,0	1,5
19	21	24	-	–	–	40	18	66	25	–	16	12	2,0	3,0	M5	10	2,0
24	60	28	–	–	–	55	27	78	30	–	18	14	2,0	3,0	M5	10	2,0
28	160	38	–	–	–	65	30	90	35	–	20	15	2,5	4,0	M8	15	10
38	325	45	–	–	–	80	38	114	45	–	24	18	3,0	4,0	M8	15	10
42	450	55	–	–	85	95	46	126	50	28	26	20	3,0	4,0	M8	20	10
48	525	62	–	-	95	105	51	140	56	32	28	21	3,5	4,0	M8	20	10
55	685	74	–	–	110	120	60	160	65	37	30	22	4,0	4,5	M10	20	17
65	940	80	–	–	115	135	68	185	75	47	35	26	4,5	4,5	M10	20	17
75	1920	95	–	–	135	160	80	210	85	53	40	30	5,0	5,0	M10	25	17
90	3600	110	–	–	160	200	104	245	100	62	45	34	5,5	6,5	M12	30	40

[1)] Other spiders/selection see page 18/19

Ordering example:

ROTEX® GS 24	98 Sh-A-GS	d20	2.5 – Ø 24		1.0 – Ø 20	
Coupling size	Spider hardness	Optional: Bore in spider	Hub type	Finish bore	Hub type	Finish bore

Hub types:

Type 2.0
Type 2.1

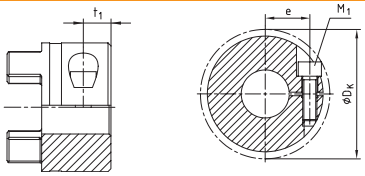

size 5 to 14
Type 2.0: Single slotted clamping hub without feather keyway (only for ATEX cat. 3), torque depending on bore Ø.
Type 2.1: single slotted clamping hub with feather keyway

Type 2.5
Type 2.6

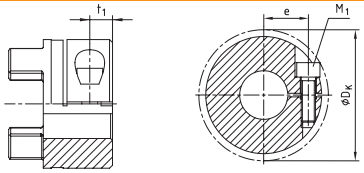

from size 19
Type 2.5: double slotted clamping hub without feather keyway (only for ATEX cat. 3), torque depending on bore Ø.
Type 2.6: double slotted clamping hub with feather keyway

ROTEX® GS standard types For size 5 to 38 hub material aluminium/for size 42 to 90 hub material steel

Size	Spider torque T_{KN} [Nm] for 98Sh-A[1]	Maximum finish bore Ød for hub type				Dimensions [mm]										Clamping screw DIN EN ISO 4762 (ROTEX® 5 DIN 84) hub type 2.0/2.1/2.5/2.6				
		2.0	2.1	2.5	2.6	D	D_H	d_H	L	l_1;l_2	M;N	E	b	s	a	M_1	t_1	e	D_K	T_A[Nm]
5	0,9	5	5	–	–	–	10	—	15	5	–	5	4	0,5	4,0	M1,2	2,5	3,5	11,4	—[2]
7	2,0	7	7	–	–	–	14	—	22	7	–	8	6	1,0	6,0	M2	3,5	5,0	16,5	0,37
9	5,0	11	11	–	–	–	20	7,2	30	10	–	10	8	1,0	1,5	M2,5	5,0	7,5	23,4	0,76
12	9,0	12	12	–	–	–	25	8,5	34	11	–	12	10	1,0	3,5	M3	5,0	9,0	27,5	1,34
14	12,5	16	16	–	–	–	30	10,5	35	11	–	13	10	1,5	2,0	M3	5,0	11,5	32,2	1,34
19	21	–	–	24	24	–	40	18	66	25	–	16	12	2,0	3,0	M6	11,0	14,5	46	10,5
24	60	–	–	28	28	–	55	27	78	30	–	18	14	2,0	3,0	M6	10,5	20,0	57,5	10,5
28	160	–	–	38	38	–	65	30	90	35	–	20	15	2,5	4,0	M8	11,5	25,0	73	25
38	325	–	–	45	45	–	80	38	114	45	–	24	18	3,0	4,0	M8	15,5	30,0	83,5	25
42	450	–	–	50	45	85	95	46	126	50	28	26	20	3,0	4,0	M10	18	32,0	93,5	69
48	525	–	–	55	55	95	105	51	140	56	32	28	21	3,5	4,0	M12	21	36,0	105	120
55	685	–	–	68	68 [3]	110	120	60	160	65	37	30	22	4,0	4,5	M12	26	42,5	119,5	120
65	940	–	–	70	70 [3]	115	135	68	185	75	47	35	26	4,5	4,5	M12	33	45,0	124	120
75	1920	–	–	80	80	135	160	80	210	85	53	40	30	5,0	5,0	M16	36	51,0	147,5	295
90	3600	–	–	90	90	160	200	104	245	100	62	45	34	5,5	6,5	M20	40	60,0	192	580

[1] Other spiders/selection see page 18 et seqq.
[2] No T_A defined (slotted screw)
[3] From Ø60 keyway opposite to the clamping screw
[4] Clamping hub single slotted with 2-off clamping screws M4 and dimension e=15

Review of shaft-hub-connection: Friction torques for hub type 2.0

Size	Ø2	Ø3	Ø4	Ø5	Ø6	Ø7	Ø8	Ø9	Ø10	Ø11	Ø12	Ø14	Ø15	Ø16
7		0,8	0,9	0,95	1,0	1,1								
9			2,1	2,2	2,3	2,4	2,5	2,6	2,7	2,8				
12			3,6	3,8	4,0	4,1	4,3	4,5	4,7	4,8	5,0			
14				4,7	4,8	5,0	5,1	5,3	5,5	5,6	5,8	6,1	6,3	6,5

Review of shaft-hub-connection: Friction torques for hub type 2.5

Size	Ø8	Ø10	Ø11	Ø14	Ø15	Ø16	Ø18	Ø19	Ø20	Ø22	Ø24	Ø25	Ø28	Ø30	Ø32	Ø35	Ø38	Ø40	Ø42	Ø45	Ø48	Ø50	Ø55	Ø60	Ø65	Ø70	Ø75	Ø80	Ø90
19	25	27	27	29	30	31	32	32	34	30 [4]	32 [4]																		
24		34	35	36	38	38	39	40	41	42	43	45	46																
28				80	81	81	84	85	87	89	91	92	97	99	102	105	109												
38					92	94	97	98	99	102	104	105	109	112	113	118	122	123	126	130									
42									232	238	244	246	255	260	266	274	283	288	294	301	309	315							
48												393	405	413	421	434	445	454	462	473	486	494	514						
55															473	486	498	507	514	526	539	547	567	587	608				
65																507	518	526	535	547	559	567	587	608	627	648			
75																			1102	1124	1148	1163	1201	1239	1278	1316	1354	1393	
90																			1944	1980	2016	2040	2100	2160	2220	2280	2340	2400	2520

ROTEX® GS Compact
Backlash-free jaw couplings

Compact design



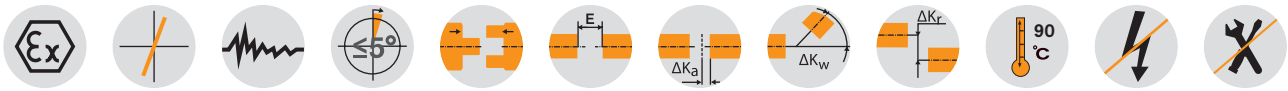

ROTEX® GS Compact																		
Size	Spider torque T_{KN} [Nm] [1]				Dimensions [mm]													T_A [Nm]
	80Sh-A	92Sh-A	98Sh-A	64Sh-D	maximum d	D_H	D_K	L	l_1, l_2	E	b	s	d_H	t	e	M	
Single slotted hub design 2.8/2.9																		
7	0,7	1,2	2,0	2,4	7	14	16,6	18	5	8	6	1	–	2,5	5	M2	0,37
8	0,5	–	2,0	2,4	8	15	17,1	20	7	6	5	0,5	6,2	4	5,5	M2	0,52
9	1,8	3,0	5,0	6	9	20	21,3	24	7	10	8	1	–	3,5	6,7	M2,5	0,76
12	3,0	5,0	9,0	12	12	25	26,2	26	7	12	10	1	–	3,5	8,3	M3	1,34
13	3,6	–	11	14,5	12,7	25	25,7	26	8	10	8	1	10	4	8	M3	1,9
14	4,0	7,5	12,5	16	16[2]	30	31,6	32	9,5	13	10	1,5	–	4,5	10	M4	2,9
16	5,0	–	15	19	16	30	32,5	32	10,3	11,4	9,4	1	14	5,3	10,5	M4	4,1
19	6,0	12,0	21,0	26,0	24[2]	40	45,5	50	17	16	12	2	–	9	14,0	M6	10
Axially slotted hub design 2.8/2.9																		
24	–	35	60	75	32	55	57,5	54	18	18	14	2	–	11	20,0	M6	10
28	–	95	160	200	35	65	69,0	62	21	20	15	2,5	–	12	23,8	M8	25
38	–	190	325	405	45	80	86,0	76	26	24	18	3	–	15	29,5	M10	49

Review of shaft-hub-connection: Friction torques for hub type 2.8																									
Size	Ø3	Ø4	Ø5	Ø6	Ø7	Ø8	Ø9	Ø10	Ø11	Ø12	Ø14	Ø15	Ø16	Ø18	Ø19	Ø20	Ø24	Ø25	Ø28	Ø30	Ø32	Ø35	Ø38	Ø40	Ø42	Ø45
Single slotted hub design 2.8																										
7	0,8	0,9	1,0	1,0	1,1																					
8	0,65	0,85	1,1	1,3	1,5	1,7																				
9		1,9	2,0	2,1	2,2	2,3	2,4																			
12		3,4	3,6	3,7	3,9	4,1	4,2	4,4	4,6	4,7																
13		2,2	2,75	3,3	3,8	4,4	4,9	5,5	6	6,6																
14			7,1	7,4	7,7	8,0	8,2	8,5	8,8	9,1	5,8[2]	5,9[2]	6,1[2]													
16			4,8	5,8	6,4	7,7	8,7	9,6	10,5	11,6	13,5	14,5	15,4													
19						24,3	25,0	25,7	26,3	27,0	28,4	29,0	29,7	31,1	31,7	32,4	25,0[2]									
Axially slotted hub design 2.8																										
24								21	23	25	30	32	34	38	40	42	51	53	59	63	68					
28											54	58	62	70	74	78	93	97	109	116	124	136				
38												92	99	111	117	123	148	154	173	185	197	216	234	247	259	278

[1] Other spiders/selection see page 18 et seqq.
[2] Size 14 with screw M3 and dimension e=10.4; size 19 with screw M5 and dimension e=15.5, D_K=47mm/T_A=6 Nm
2.8 = Without feather keyway
2.9 = With feather keyway

Ordering example:

ROTEX® GS 38	Compact	98 Sh-A-GS	d28	2.8 - Ø28		2.8 - Ø45	
Coupling size	Type	Spider hardness	**Optional** Bore in spider	Hub type	Finish bore	Hub type	Finish bore

ROTEX® GS 8, 13, 16
Compact
Single slotted type 2.8

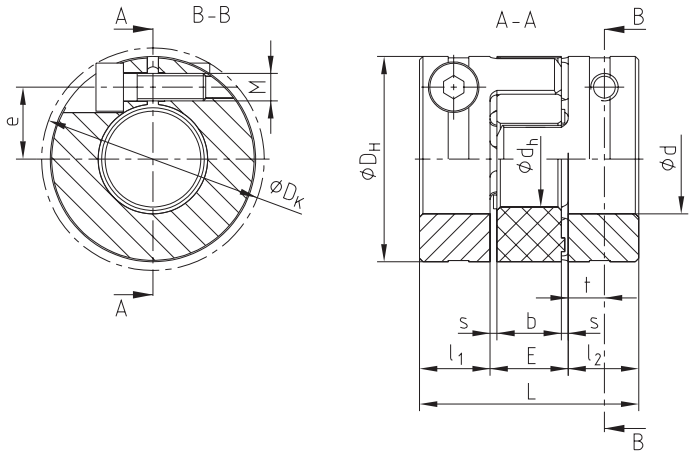

ROTEX® GS 7, 9, 12, 14, 19
Compact
Single slotted type 2.8

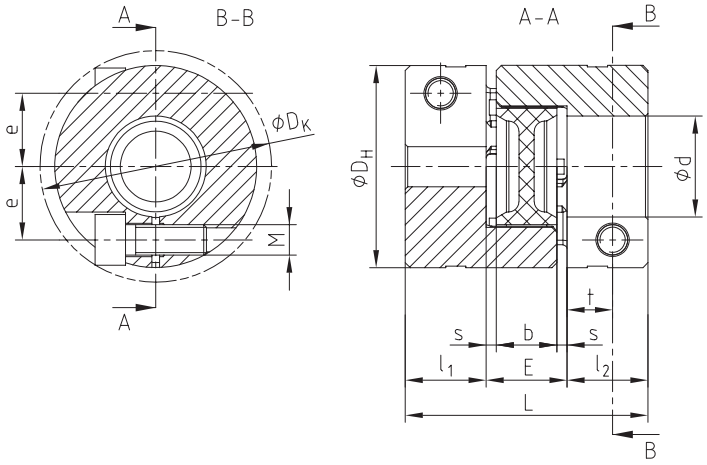

ROTEX® GS 24 - 38 Compact
Axially slotted type 2.8

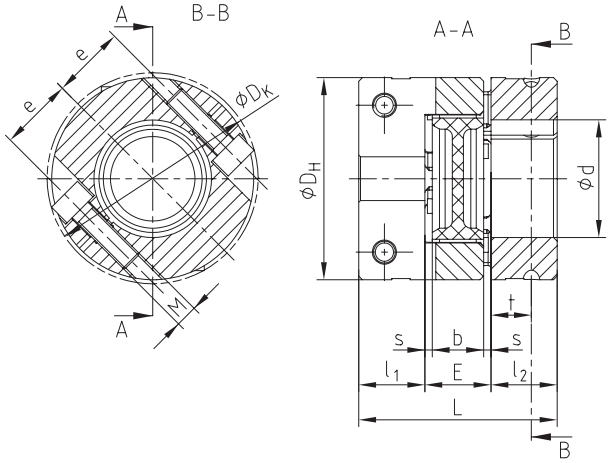

Hub types

Type 2.8

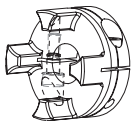

Short clamping hub C with axial slots without feather keyway

Type 2.8 from size 24 standard, size 7-19 type 2.8 single slotted

Type 2.9

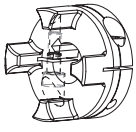

Short clamping hub C with axial slots with feather keyway

Type 2.9 from size 24 standard, size 7-19 type 2.9 single slotted

ROTEX® GS Clamping ring hubs light
Backlash-free jaw couplings

Integrated clamping system made of aluminium

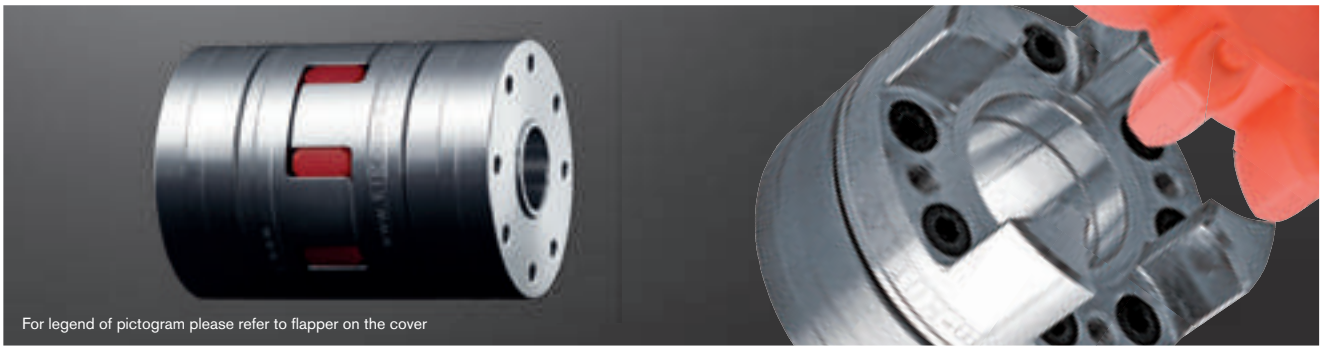



Tack thread M1 between clamping screws

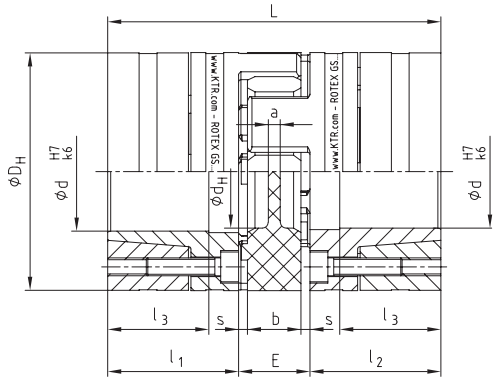

ROTEX® GS clamping ring hubs light

Size	Spider torque T_{KN} [Nm] 1)			Dimensions [mm]										Clamping screws DIN EN ISO 4762				Weight per hub with max. bore [kg]	Mass moment of inertia per hub with max. bore [kg m²]
	92 Sh-A	98Sh-A	64 Sh-D	maxi.d	D_H 2)	d_H	L	l_1; l_2	l_3	E	b	s	a	M	Number z	T_A[Nm]	M_1		
14	7,5	12,5	16,0	14	30	10,5	50	18,5	13,5	13	10	1,5	2,0	M3	4	1,34	M3	0,032	0,04 x 10^{-4}
19	12	21	26	20	40	18	66	25	18	16	12	2,0	3,0	M4	6	3	M4	0,077	0,19 x 10^{-4}
24	35	60	75	32	55	27	78	30	22	18	14	2,0	3,0	M5	4	6	M5	0,162	0,78 x 10^{-4}
28	95	160	200	38	65	30	90	35	27	20	15	2,5	4,0	M5	8	6	M5	0,240	1,70 x 10^{-4}
38	190	325	405	48	80	38	114	45	35	24	18	3,0	4,0	M6	8	10	M6	0,490	5,17 x 10^{-4}
42	265	450	560	51	95	46	126	50	35	26	20	3,0	4,0	M8	4	25	M8	0,772	11,17 x 10^{-4}
48	310	525	655	55	105	51	140	56	41	28	21	3,5	4,0	M10	4	49	M10	1,066	18,81 x 10^{-4}

1) Other spiders/selection see page 18 et seqq.
2) $ØD_H$ + 2 mm with high speeds for expansion of spider

Review of shaft-hub-connection: Friction torques for hub type 6.0 light

Size		Ø6	Ø8	Ø9	Ø10	Ø11	Ø14	Ø15	Ø16	Ø19	Ø20	Ø24	Ø25	Ø28	Ø30	Ø32	Ø35	Ø38	Ø40	Ø42	Ø45	Ø48	Ø50	Ø55*
14	H7/k6	6,9	11	16	17	22	31																	
	H7/h6	4,7	8	13	14	19	22																	
19	H7/k6				28	35	51	61	43	68	78													
	H7/h6				23	30	44	55	32	58	70													
24	H7/k6						72	85	79	119	134	145	160	211	177	199								
	H7/h6						64	79	67	106	124	108	123	172	147	157								
28	H7/k6								120	177	161	247	271	305	355	294	366	382						
	H7/h6								102	160	132	224	250	281	336	222	294	311						
38	H7/k6										248	376	411	486	563	553	673	665	748	832	732	848		
	H7/h6										210	344	382	453	536	454	577	550	632	718	614	732		
42	H7/k6													559	645	666	806	859	957	924	1069	1221	1229	
	H7/h6													522	616	558	703	800	909	806	960	1125	1173	
48	H7/k6														706	795	962	1047	1165	1160	1339	1527	1393	1662
	H7/h6														650	735	914	983	1110	1025	1216	1422	1207	—

* Standard bore tolerance H7, special tolerances on request * From Ø55 tolerance G7/m6
With a bigger fit clearance the torque is reduced. Steel or nodular iron with a yield strength of approx. 250 N/mm² or more can be used as shaft material. For the strength calculation of shaft/hollow shaft see KTR standard 45510 on our homepage www.ktr.com.

Ordering example:

ROTEX® GS 24	98 Sh-A-GS	d20	6.0 light – Ø 24		6.0 light – Ø 20	
Coupling size	**Spider** hardness	Optional: Bore in spider	Hub type	Finish bore	Hub type	Finish bore

ROTEX® GS Clamping ring hubs made of steel
Backlash-free jaw couplings

Integrated clamping system made of steel

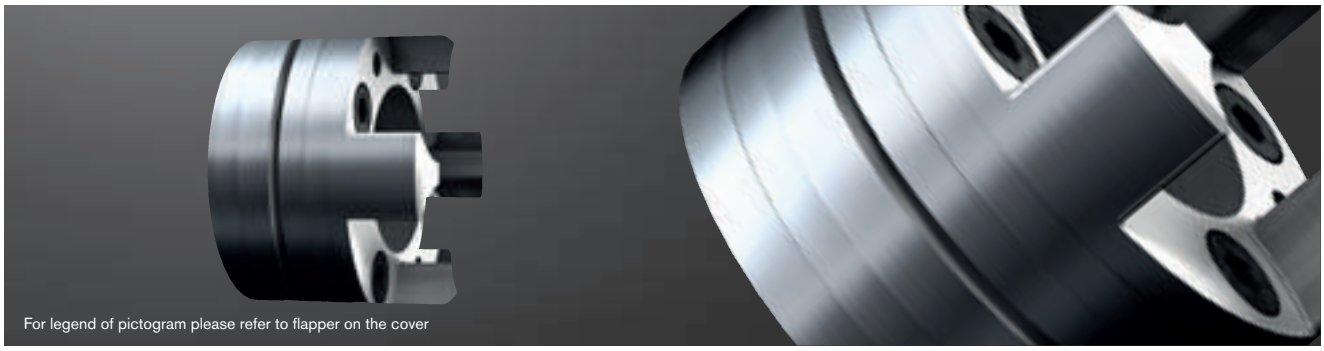

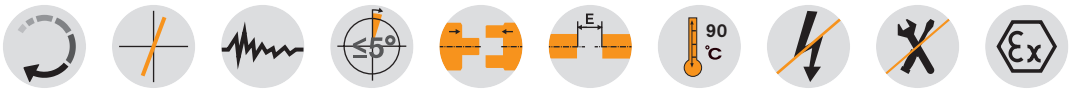

Tack thread M1 between clamping screws

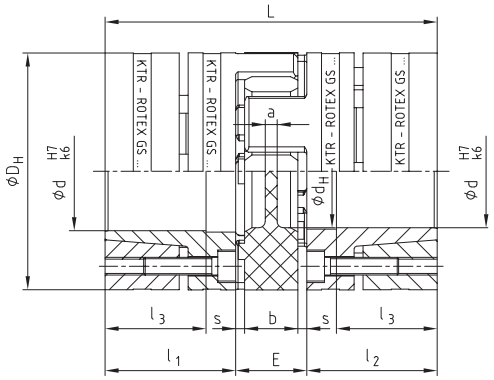

ROTEX® GS clamping ring hubs made of steel

Size	Spider torque T_{KN} [Nm][1]			Dimensions [mm]										Clamping screws DIN EN ISO 4762				Weight per hub with max. bore [kg]	Mass moment per hub with max. bore [kg m²]
	98 Sh-A	64 Sh-D	72 Sh-D	maxi.d	D_H[2]	d_H	L	l_1; l_2	l_3	E	b	s	a	M	Number z	T_A[Nm]	M_1		
19	21	26	–	20	40	18	66	25	18	16	12	2,0	3,0	M4	6	4,1	M4	0,179	0,44 x 10^{-4}
24	60	75	97	28	55	27	78	30	22	18	14	2,0	3,0	M5	4	8,5	M5	0,399	1,91 x 10^{-4}
28	160	200	260	38	65	30	90	35	27	20	15	2,5	4,0	M5	8	8,5	M5	0,592	4,18 x 10^{-4}
38	325	405	525	48	80	38	114	45	35	24	18	3,0	4,0	M6	8	14	M6	1,225	12,9 x 10^{-4}
42	450	560	728	51	95	46	126	50	35	26	20	3,0	4,0	M8	4	41	M8	2,30	31,7 x 10^{-4}
48	525	655	852	55	105	51	140	56	41	28	21	3,5	4,0	M10	4	69	M10	3,08	52,0 x 10^{-4}
55	685	825	1072	70	120	60	160	65	45	30	22	4,0	4,5	M10	4	69	M10	4,67	103,0 x 10^{-4}
65	940	1175	1527	70	135	68	185	75	55	35	26	4,5	4,5	M12	4	120	M12	6,70	191,0 x 10^{-4}
75	1920	2400	–	80	160	80	210	85	63	40	30	5,0	5,0	M12	5	120	M12	9,90	396,8 x 10^{-4}
90	3600	4500	–	105	200	104	245	100	75	45	34	5,5	6,5	M16	5	295	M16	17,7	1136 x 10^{-4}

[1] Other spiders/selection see page 18 et seqq.
[2] $ØD_H$ + 2 mm with high speeds for expansion of spider

Review of shaft-hub-connection: Friction torques for hub type 6.0 steel

Size		Ø10	Ø11	Ø14	Ø15	Ø16	Ø19	Ø20	Ø24	Ø25	Ø28	Ø30	Ø32	Ø35	Ø38	Ø40	Ø42	Ø45	Ø48	Ø50	Ø55*	Ø60*	Ø65*	Ø70*	Ø80*	Ø90*	Ø95*	Ø100*	Ø105*
19	H7/k6	27	32	69	84	57	94	110																					
	H7/h6	15	18	57	74	38	76	94																					
24	H7/k6			70	87	56	97	114	116	133	192																		
	H7/h6			55	74	32	72	93	84	103	173																		
28	H7/k6				108	131	207	148	253	285	315	382	330	433	503														
	H7/h6				74	97	172	94	207	242	267	343	260	377	453														
38	H7/k6							208	353	395	439	531	463	603	593	689	793	776											
	H7/h6							136	290	337	373	476	367	525	491	601	721	677											
42	H7/k6									445	495	595	526	678	671	775	718	872	1043	1061									
	H7/h6									387	429	540	429	600	569	687	599	773	970	978									
48	H7/k6											616	704	899	896	1030	962	1160	1379	1222	1543								
	H7/h6											513	590	806	775	924	822	1042	1290	1073	–								
55	H7/k6													863	856	991	918	1119	1110	1247	1277	1665	1605	2008					
	H7/h6													750	710	863	750	976	934	1089	–	–	–	–					
65	H7/k6															1446	1355	1637	1635	1827	1887	2429	2368	2930					
	H7/h6															1275	1135	1447	1404	1619	–	–	–	–					
75	H7/k6																1710	2053	2059	2294	2384	3040	2983	3664	4293				
	H7/h6																1460	1836	1797	2056	–	–	–	–	–				
90	H7/k6																			3845	4249	4794	5858	5900	7036	8047	9247	9575	10845
	H7/h6																			3445	–	–	–	–	–	–	–	–	–

* From Ø55 tolerance G7/m6
With bigger clearance the torque is reduced. For the stiffness calculation of the shaft/hollow shaft see KTR standard 45510 at our homepage at www.ktr.com.

Ordering example:

ROTEX® GS 24	98 Sh-A-GS	d20	6.0 steel	Ø24	6.0 steel	Ø20
Coupling size	Spider hardness	Optional: Bore in spider	Hub type	Finish bore	Hub type	Finish bore

ROTEX® GS P
Backlash-free jaw couplings

Highly accurate type P according to DIN 69002



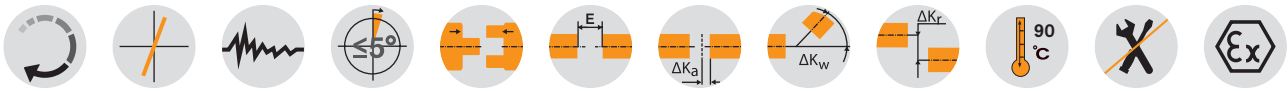

ROTEX® GS type P material of hub/clamping ring steel

Size	Spider torque T_{KN} [Nm][1]		Dimensions [mm]											Tightening torque of clamping screws T_A [Nm]	Weight per hub with bore Ød standard [kg]	Mass moment of inertia with bore Ø d standard [kgm²]
	98 Sh-A	64 Sh-D	maximum d	D_H[2]	d_H	L	l_1;l_2	l	E	b	s	a	d_3			
14 P	12,5	16	15	32	10,5	50	18,5	15,5	13	10	1,5	2	—	1,89	0,08	0,011 x 10^{-3}
19 P	21	26	20	40	18	66	25	21	16	12	2	3	—	3,05	0,19	0,046 x 10^{-3}
24 P	60	75	28	55	27	78	30	25	18	14	2	3	—	8,5	0,44	0,201 x 10^{-3}
28 P	160	200	38	65	30	90	35	30	20	15	2,5	4	—	8,5	0,64	0,438 x 10^{-3}
38 P	325	405	48	80	38	114	45	40	24	18	3	4	—	14	1,32	1,325 x 10^{-3}
42 P	450	560	51	95	46	126	50	45	26	20	3	4	18,5	35	2,23	3,003 x 10^{-3}
48 P	525	655	55	105	51	140	56	50	28	21	3,5	4	20,5	69	3,09	5,043 x 10^{-3}
55 P	685	825	70	120	60	160	65	58	30	22	4	4,5	22,5	69	4,74	10,02 x 10^{-3}
65 P	940	1175	70	135	68	185	75	55	35	26	4,5	4,5	30	120	6,70	191,0 x 10^{-4}
75 P	1920	2400	80	160	80	210	85	63	40	30	5,0	5,0	40	120	9,90	396,8 x 10^{-4}
90 P	3600	4500	105	200	104	245	100	75	45	34	5,5	6,5	50	295	17,7	1136 x 10^{-4}

[1] Other spiders/selection see page 18 et seqq.
[2] Ø D_H + 2 mm with high speeds for expansion of spider
For the stiffness calculation of the shaft/hollow shaft see KTR standard 45510 on our homepage www.ktr.com

Review of shaft-hub-connection: Friction torques for hub type 6.0P steel

Size		Ø10	Ø11	Ø14	Ø15	Ø16	Ø19	Ø20	Ø24	Ø25	Ø28	Ø30	Ø32	Ø35	Ø38	Ø40	Ø42	Ø45	Ø48	Ø50	Ø55*	Ø60*	Ø65*	Ø70*	Ø80*	Ø90*	Ø95*	Ø100*	Ø105*
14	H6/k6	11	13	29																									
19	H6/k6	34	41	75	90	68	104	119																					
24	H6/k6			79	95	70	110	126	134	149	201																		
28	H6/k6				128	150	225	177	278	307	341	403	366	461	528														
38	H6/k6							247	386	426	475	560	511	641	644	733	828	825											
42	H6/k6									389	433	512	464	585	586	669	631	753	888	906									
48	H6/k6											672	762	945	957	1082	1033	1219	1423	1296	1606								
55	H6/k6													920	929	1055	1002	1190	1198	1325	1388	1743	1722	2088					
65	H6/k6															1532	1465	1731	1750	1931	2034	2534	2521	3038					
75	H6/k6																1835	2161	2190	2413	2551	3161	3158	3789	4421				
90	H6/k6																			4046	4503	5057	6079	6181	7324	8398	9530	9892	11084

*From Ø55 G6/m6.
With bigger clearance the torque is reduced. For the stiffness calculation of the shaft/hollow shaft see KTR standard 45510 at our homepage at www.ktr.com.

Selection for stub spindles according to DIN 69002

Spindle drive	ROTEX® GS P size	Dimensions to DIN 69002										
		Standard spindle shaft diameter d	d_1	d_2	d_3	D_H	l_1; l_2	L	E	Transmittable torque T_R with Ød [Nm] [3]	Weight per hub with bore Ød standard [kg] [3]	Mass moment of inertia with bore Ø d standard [kgm²] [3]
25 x 20	14 P	14	17	17	8,5	32	18,5	50	13	25	0,08	0,011 x 10^{-3}
32k x 25	19 P37.5	16	20	19	9,5	37,5	25	66	16	60	0,16	0,037 x 10^{-3}
32g x 30	19 P	19	23	22	9,5	40	25	66	16	71	0,19	0,046 x 10^{-3}
40 x 35	24 P50	24	28	29	12,5	50	30	78	18	108	0,331	0,136 x 10^{-3}
50 x 45	24 P	25	30	30	12,5	55	30	78	18	170	0,44	0,201 x 10^{-3}
63 x 55	28 P	35	40	40	14,5	65	35	90	20	506	0,64	0,438 x 10^{-3}
80 x 75	38 P	40	46	46	16,5	80	45	114	24	821	1,32	1,325 x 10^{-3}

[3] Standard spindle shaft diameters

Ordering example:

ROTEX® GS 24	P	98 Sh-A-GS	6.0 - Ø25		6.0 - Ø25	
Coupling size	Type	Spider hardness	Hub type	Finish bore	Hub type	Finish bore

Components

Tack thread M1 between clamping screws

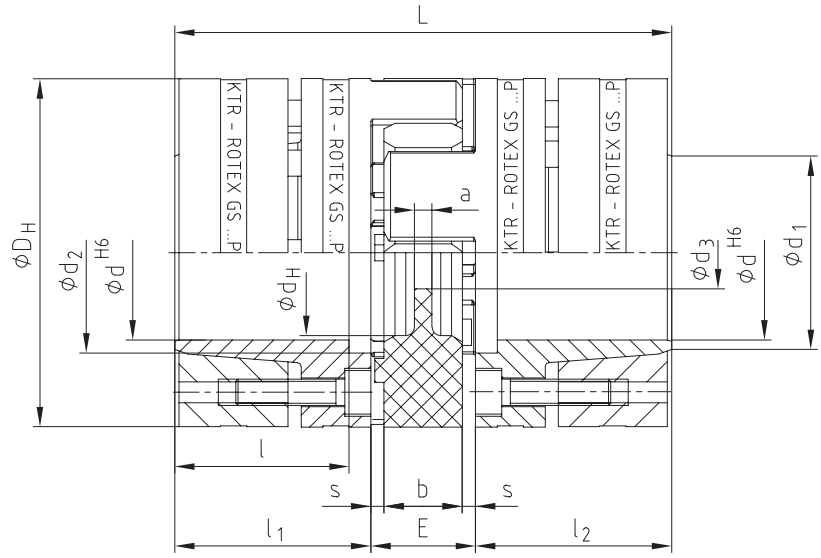

ROTEX® GS type P with central coolant supply for stub spindles and multiple spindle heads

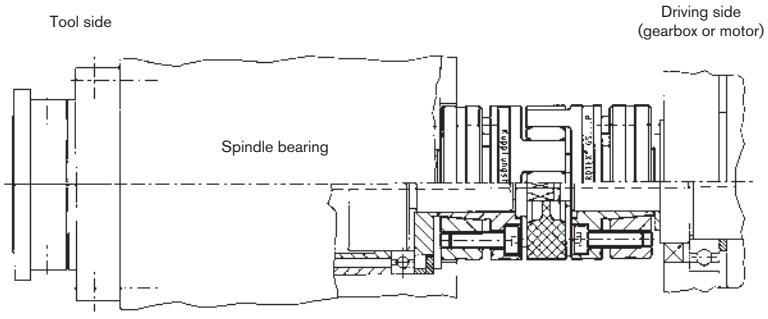

ROTEX® GS P ETP®
Backlash-free jaw couplings

Integrated hydraulic clamping system

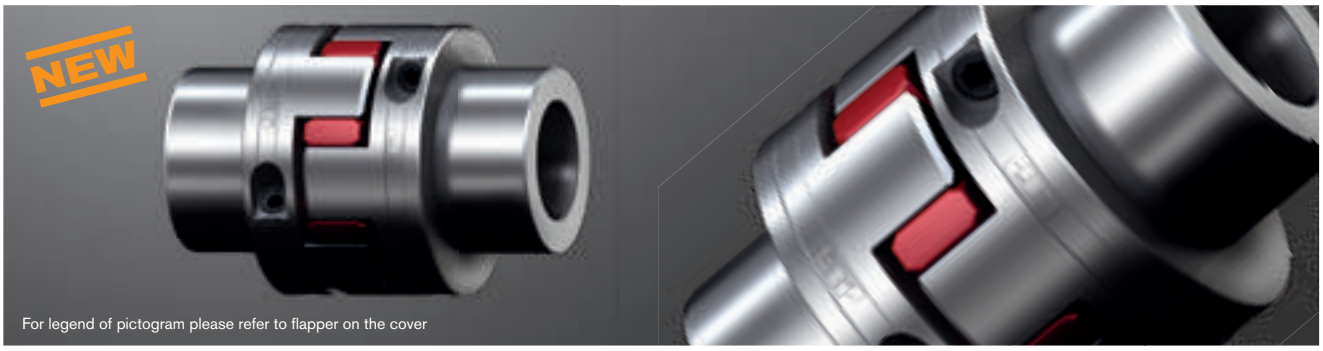

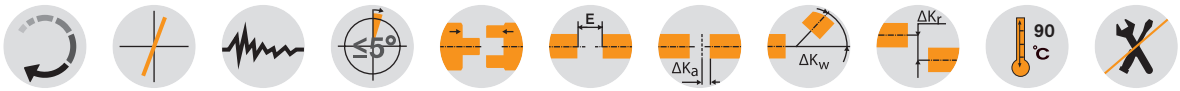

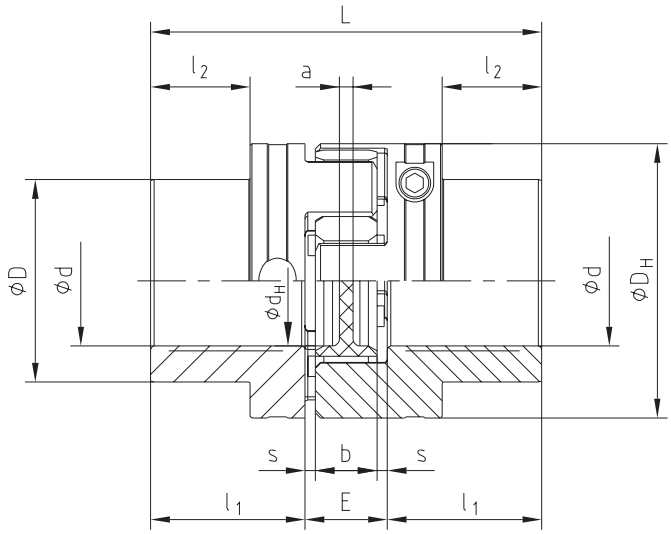

ROTEX® GS P ETP®																	
Size	Torque of spider T_{KN} [Nm] 1)			Dimensions [mm]											Screw		Weight per hub with max. bore [kg]
	92 Sh-A	98 Sh-A	64 Sh-D	"max. bore Ø"	DH2)	d_H	L	l_1	l_2	l_3	E	b	s	a	M	T_A [Nm]	
24	35	60	75	24	55	27	78	30	16	30	18	14	2	3	M6	5	0,33
28	95	160	200	32	65	30	90	35	20	35	20	15	2,5	4	M6	5	0,53
38	190	325	405	40	80	38	114	45	29	45	24	18	3	4	M6	5	0,98
42	265	450	560	48	95	46	126	50	34	50	26	20	3,5	4	M6	5	1,51

1) Other spiders/selection on request
2) $ØD_H$ + 2 mm with high speeds for expansion of spider

Review of shaft-hub-connection: Friction torques for hub type ROTEX® GS P ETP®																
Size	Tolerance fit	Bore diameter d / collar diameter D														
		Ø 15 / Ø 24	Ø 16 / Ø 26	Ø 19 / Ø 30	Ø 20 / Ø 32	Ø 24 / Ø 39	Ø 25 / Ø 40	Ø 28 / Ø 44	Ø 30 / Ø 47	Ø 32 / Ø 50	Ø 35 / 55	Ø 38 / Ø 59	Ø 40 / Ø 62	Ø 42 / Ø 65	Ø 45 / Ø 70	Ø 48 / Ø 74
24	F6 / k6	42	50	70	80	125										
28		50	60	80	95	150	160	210	230	250						
38						220	230	310	350	380	450	570	610			
42							270	360	410	440	540	660	730	820	940	1100

ETP® is a registered trademark by ETP® Transmission AB.

Ordering example:

ROTEX® GS P ETP	98 Sh-A-GS	d 20	GS-ETP - Ø 24		GS-ETP - Ø 20	
Coupling size	Spider hardness	Optional: Bore in spider	Hub type	Finish bore	Hub type	Finish bore

ROTEX® GS expansion hubs
Backlash-free jaw couplings

Clamping system for hollow shaft connection

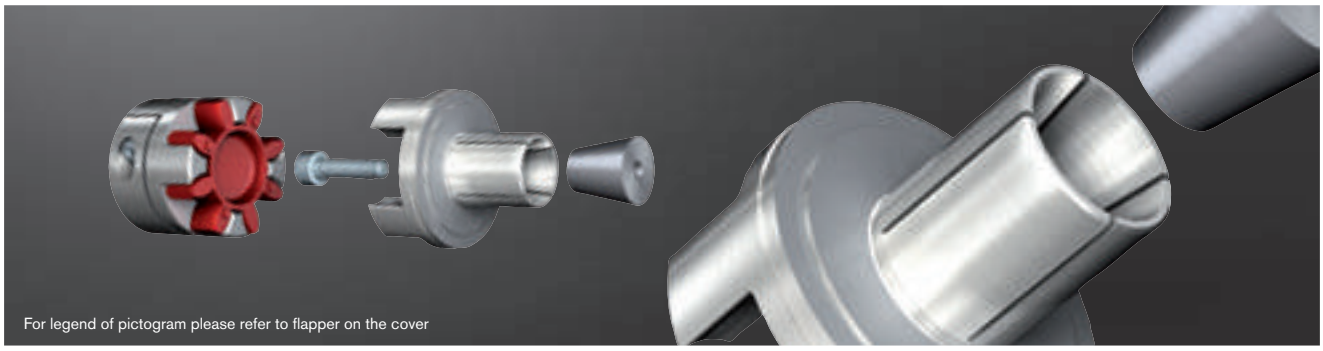

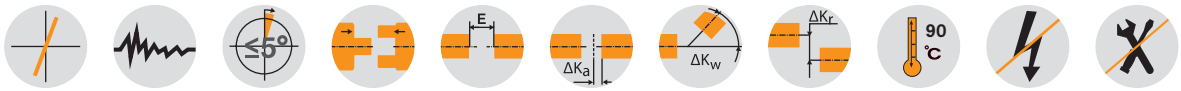

ROTEX® GS expansion hub						Material of expansion hub aluminium/material of clamp pin stainless steel											
Size	Spider torque T_{KN} [Nm] [2]					Dimensions [mm]											
	80 Sh-A	92 Sh-A	98 Sh-A	64 Sh-D	72 Sh-D	D_1 [3]	D_2	D_H	l_1 [3]	l_2 [1]	l_4 [3]	l_5 [3]	l_6	L [1]	E	b	s
9	1,8	3,0	5,0	6,0	–	10	–	20	20	10	11	–	0	40	10	8	1,0
12	3,0	5,0	9,0	12,0	–	10	20	25	19	11	14	1,5	2	42	12	10	1,0
14	4,0	7,5	12,5	16,0	–	12	24	30	18,5	11	12,5	3	2	42,5	13	10	1,5
19	6,0	12,0	21,0	26,0	–	20	35	40	28	25	20	1	0	69	16	12	2,0
24	–	35	60	75	97	25	45	55	38	30	30	1	4	86	18	14	2,0
28	–	95	160	200	260	35	55	65	44	35	36	1	5	99	20	15	2,5

[1] Expansion hub can be combined with other hub designs as a counter side, too. l2 depending on hub design. Other hub types see page 124
[2] For selection see page 18 et seqq.
[3] The dimensions D_1; l_1, l_4 and l_5 are examples. Other dimensions on customers' request.

Review of shaft-hub-connection: Friction torques for hub type 9.0*						
Size	D_1	D_2	l_1	l_4 [3]	l_5	Friction torque [Nm]
9	10	–	20	11	–	6,4
12	10	20	19	14	1,5	7,7
14	12	24	18,5	12,5	3	7,7
19	20	35	28	20	1	35,7
24	25	45	38	30	1	82
28	35	55	44	36	1	182

* The transmittable torques of the clamping connection consider the dimensions D_1, D_2, l_4 and l_5 as specified with steel being the material of the hollow shaft.

ROTEX® GS expansion hub type 9.0 with clamping hub [1]

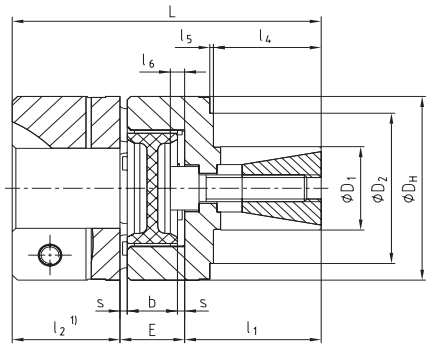

ROTEX® GS expansion hub for axis of belt



Special types for hollow shaft connections

Shaft extension

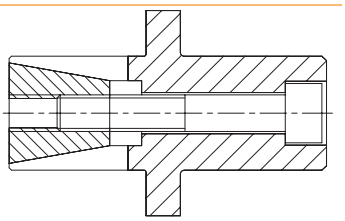

ROTEX® GS hub with CLAMPEX® KTR 150

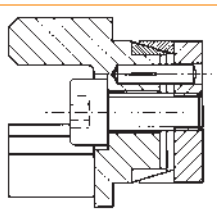

Ordering example:	ROTEX® GS 24	98 Sh-A-GS	d20	9.0 – Ø 24		2.5 – Ø 20	
	Coupling size	Spider hardness	Optional: Bore in spider	Hub type	D_1	Hub type	Finish bore

ROTEX® GS A-H
Backlash-free jaw couplings

Drop-out center design coupling

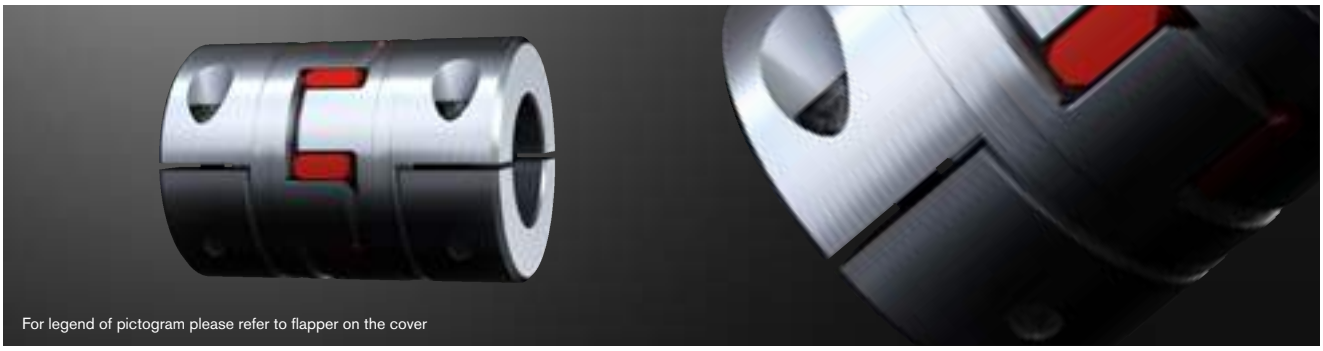

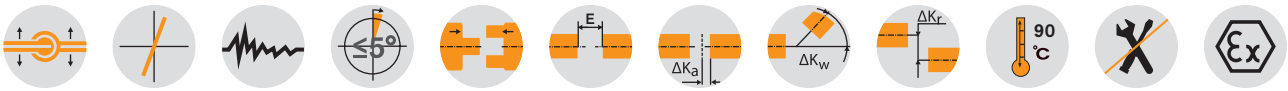

ROTEX® GS Type A-H hub material aluminium												
Size	Max. finish bore Ød [mm]	Dimensions [mm]									Cyl. screws DIN EN ISO 4762	
		L	l_1; l_2	E	b	s	D_H	D_K	x_1/x_2	E_1	Mxl	T_A [Nm]
19	20	66	25	16	12	2,0	40	46	17,5	31	M6x16	10
24	28	78	30	18	14	2,0	55	57,5	22,0	34	M6x20	10
28	38	90	35	20	15	2,5	65	73	25,0	40	M8x25	25
38	45	114	45	24	18	3,0	80	83,5	33,0	48	M8x30	25
42	50	126	50	26	20	3,0	95	93,5	39	48	M10x30	49

Technical data								
Size	Spider Shore-GS [1]	Shore range	Max. speed [rpm]	Torque [Nm]		Static torsion spring stiffness [2] [Nm/rad]	Weight per hub with max. bore [kg]	Mass moment of inertia J of each hub with max. bore diameter [kgm²]
				T_{KN}	T_{Kmax}			
19	80	A	9550	6,0	12,0	618	77 x 10^{-3}	19,6 x 10^{-6}
	92	A		12,0	24,0	1090		
	98	A		21,0	42,0	1512		
	64	D		26,0	52,0	2560		
24	92	A	6950	35	70	2280	161 x 10^{-3}	77,3 x 10^{-6}
	98	A		60	120	3640		
	64	D		75	150	5030		
28	92	A	5850	95	190	4080	240 x 10^{-3}	173 x 10^{-6}
	98	A		160	320	6410		
	64	D		200	400	10260		
38	92	A	4750	190	380	6525	470 x 10^{-3}	496 x 10^{-6}
	98	A		325	650	11800		
	64	D		405	810	26300		
42	92	A	4000	265	530	10870	1770 x 10^{-3}	2409 x 10^{-6}
	98	A		450	900	21594		
	64	D		560	1120	36860		

[1] Other spiders/selection see page 18 et seqq.
[2] Static torsion spring stiffness with 0.5 x T_{KN}
To make sure that the coupling can be assembled/disassembled radially, please observe the insertion dimension x_1/x_2 of the shafts.

Review of shaft-hub-connection: Friction torques for hub type 7.8																							
Size	Ø8	Ø10	Ø11	Ø14	Ø15	Ø16	Ø18	Ø19	Ø20	Ø22	Ø24	Ø25	Ø28	Ø30	Ø32	Ø35	Ø38	Ø40	Ø42	Ø45	Ø46	Ø48	Ø50
19	17	21	23	30	32	34	38	40	42														
24		21	23	30	32	34	38	40	42	47	51	53	59										
28				54	58	62	70	74	78	86	93	97	109	117	124	136	148						
38							70	74	78	86	93	97	109	117	124	136	148	156	163	175			
42										136	149	155	174	186	198	217	235	248	260	279	285	297	310

Ordering example:

ROTEX® GS 38	A-H	98 Sh-A-GS	7.8 – Ø 38		7.9 – Ø 30	
Coupling size	Type	Spider hardness	Hub type	Finish bore	Hub type	Finish bore

Type A-H

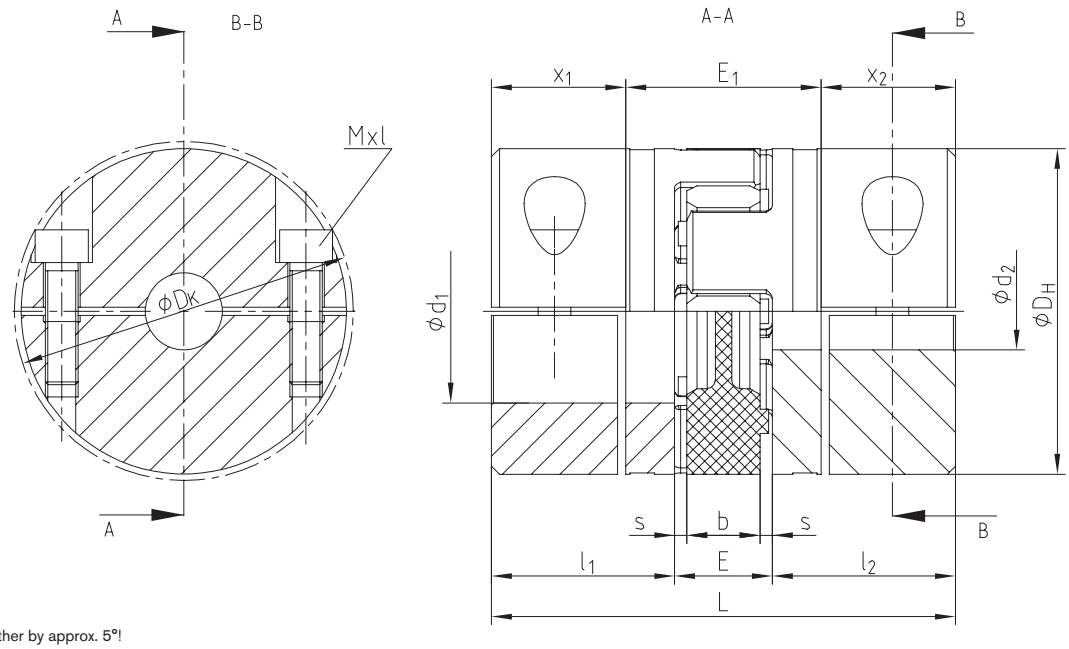

Please note:
The feather keys are offset to each other by approx. 5°!
Hub material: Al-H

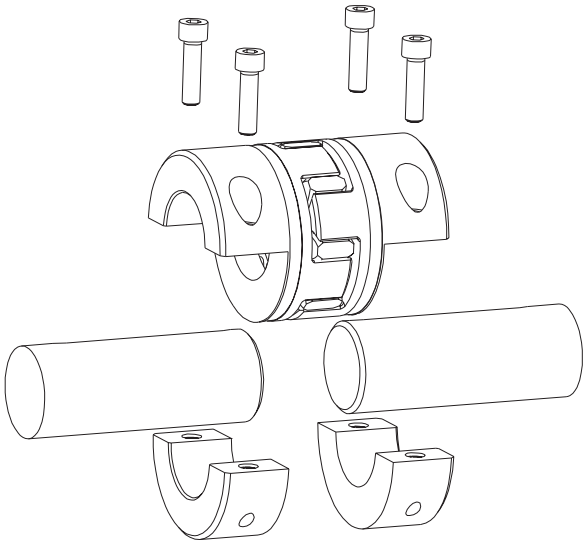

Hub types

Type 7.8

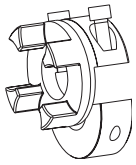

Clamping hub type H without feather keyway for single-cardanic connection

Type 7.9

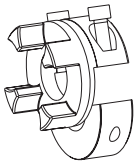

Clamping hub type H with feather keyway for singe-cardanic connection

ROTEX® GS DKM
Backlash-free jaw couplings

Double-cardanic jaw coupling

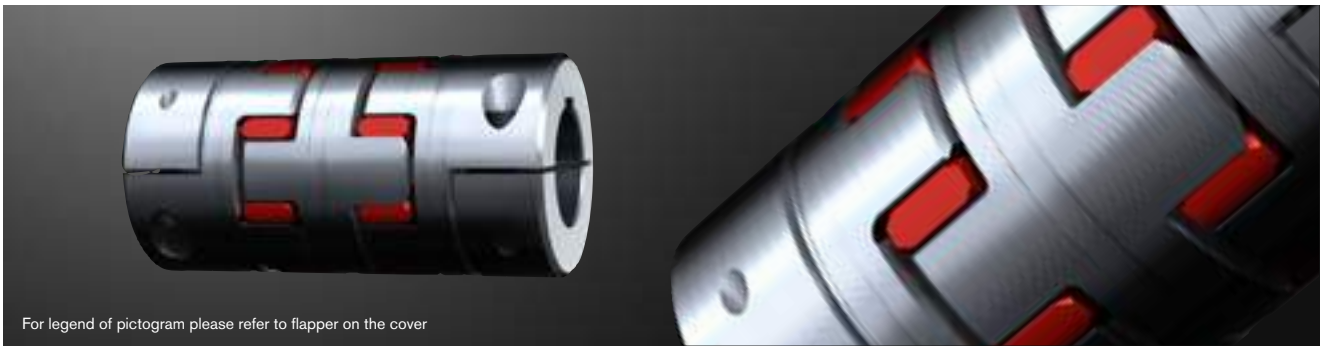

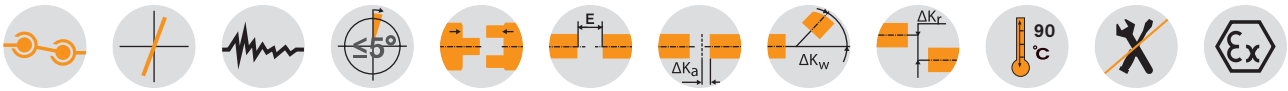

ROTEX® GS DKM Spacer material aluminium/hub material depends on hub design

Size	Spider torque T_{KN} [Nm] [1]		Dimensions [mm]													
	98 Sh-A	64 Sh-D	max. d [2]	D	D_H	d_H	d_{H1}	l_1; l_2	M; N	l_{11}	l_{12}	L_{DKM}	E	b	s	a
5	0,9	—	5	—	10	—	—	5	—	3	13	23	5	4	0,5	4,0
7	2,0	2,4	7	—	14	—	—	7	—	4	20	34	8	6	1,0	6,0
9	5,0	6,0	11	—	20	7,2	—	10	—	5	25	45	10	8	1,0	1,5
12	9,0	12,0	12	—	25	8,5	—	11	—	6	30	52	12	10	1,0	3,5
14	12,5	16,0	16	—	30	10,5	—	11	—	8	34	56	13	10	1,5	2,0
19	21,0	26,0	24	—	40	18,0	18	25	—	10	42	92	16	12	2,0	3,0
24	60	75	28	—	55	27,0	27	30	—	16	52	112	18	14	2,0	3,0
28	160	200	38	—	65	30,0	30	35	—	18	58	128	20	15	2,5	4,0
38	325	405	45	—	80	38,0	38	45	—	20	68	158	24	18	3,0	4,0
42	450	560	55	85	95	46	46	50	28	22	74	174	26	20	3,0	4,0
48	525	655	62	95	105	51	51	56	32	24	80	192	28	21	3,5	4,0
55	685	825	74	110	120	60	60	65	37	28	88	218	30	22	4,0	4,5

[1] Other spiders/selection see page 18 et seqq.
[2] Depending on hub type. Hub types can be freely selected, for summary see page 124

Ordering example:

ROTEX® GS 24	DKM	98 Sh-A-GS	d25	1.0 - Ø38		2.5 - Ø25	
Coupling size	Type	Spider hardness	Optional: Bore in spider	Hub type	Finish bore	Hub type	Finish bore

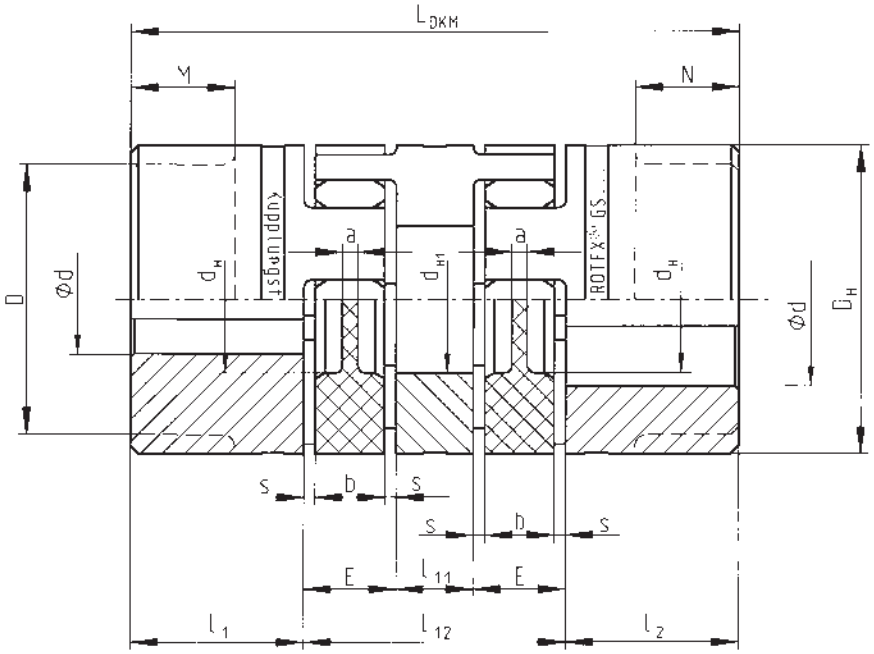

Other types:

ROTEX® GS - CF - DKM

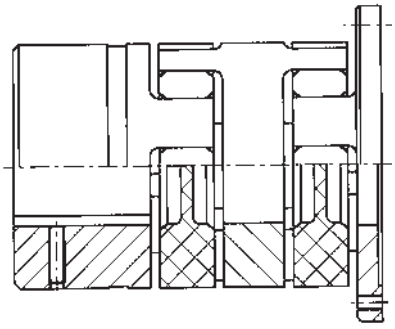

ROTEX® GS DKM with clamping hubs DH type 7.5/7.6

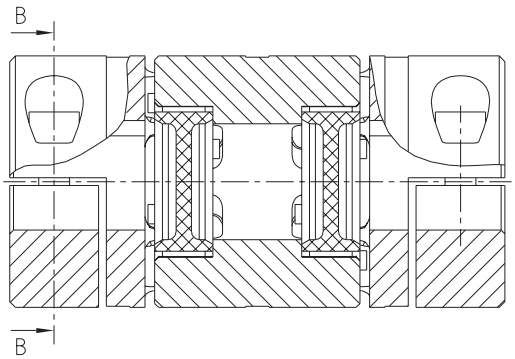

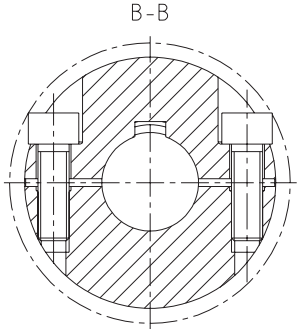

ROTEX® GS ZR3
Backlash-free intermediate shaft couplings

Intermediate shaft coupling with aluminium pipe bonded

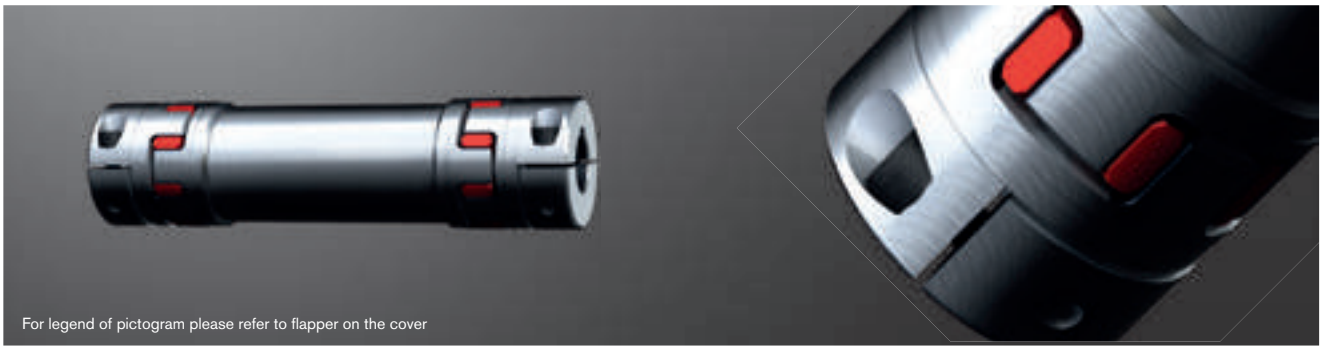



ROTEX® GS type ZR3 hub material aluminium/intermediate pipe material aluminium

Size	Dimensions [mm]																
	Minimum and maximum finish bore		General												Cyl. screw DIN EN ISO 4762	
								L_R		$L_{ZR} = L_R + 2 \cdot l_3$						
	$d_{min.}$	$d_{max.}$	D_H	l_1	L	l_3	E	min.	max.	min.	max.	d_R	D_K	t_1	e	8.8	T_A [Nm]
14	5	15	30	18,5	36,0	14,5	13	72	2971	101	3000	28	33,3	7,5	10,5	M4	2,9
19	8	20	40	25	49,0	17,5	16	98	2965	133	3000	40	46	8,0	14,5	M6	10
24	10	28	55	30	59,0	22,0	18	121	3456	165	3500	50	57,5	10,5	20	M6	10
28	14	38	65	35	67,0	25,0	20	137	3950	187	4000	60	73	11,5	25	M8	25
38	18	45	80	45	83,5	33,0	24	169	3934	235	4000	70	83,5	15,5	30	M8	25
42	22	50	95	50	93,0	36,5	26	180	3927	253	4000	80	93,5	18,0	32	M10	49
48	22	55	105	56	100,0	39,5	28	202	3921	281	4000	100	105	18,5	36	M12	86

Technical data of type ZR3

Size	Spider torque T_{KN} [Nm] [1]		Moment of inertia [10^{-3} kgm²]			Stat. torsion spring stiffness [Nm²/rad] [3]
	98 Sh-A	64 Sh-D	hub [2]	ZR hub	Pipe/meter	ZW C_2 [3]
14	12,5	16,0	0,00362	0,00238	0,088	858
19	21,0	26,0	0,02002	0,01304	0,329	3243,6
24	60,0	75,0	0,07625	0,04481	0,673	6631,8
28	160	200	0,17629	0,10950	1,199	11814,1
38	325	405	0,50385	0,2572	2,972	29290,4
42	450	560	1,12166	0,5523	4,560	44929,7
48	525	655	1,87044	1,1834	9,251	91158,2

[1] Other spiders/selection see page 18 et seqq.
[2] With $d_{max.}$
[3] Torsion spring stiffness with a length of 1 m of intermediate pipe with $L_{pipe} = L_{ZR} - 2 \cdot L$
For enquiries and orders please specify the shaft distance dimension LR along with the maximum speed to review the critical bending speed. See diagramme on page 123.
The intermediate pipe could be combined with other hub designs, but in that case it can no longer be radially disassembled. Please mention the shaft distance dimension required in your order.
With vertical application a support washer has to be used (please mention in your order).
Insertion dimension of shaft l_3, to make sure that the coupling can be assembled/disassembled radially.
Straightness/concentricity of pipes according to DIN EN 755-1

Review of shaft-hub-connection: Friction torques for hub type 7.5

Size	Ø5	Ø6	Ø8	Ø10	Ø11	Ø14	Ø15	Ø16	Ø18	Ø19	Ø20	Ø22	Ø24	Ø25	Ø28	Ø30	Ø32	Ø35	Ø38	Ø40	Ø42	Ø45	Ø46	Ø48	Ø50	Ø55
14	4,6	5,5	7,4	9,2	10,1	12,9	13,8																			
19			17	21	23	30	32	34	38	40	42															
24				21	23	30	32	34	38	40	42	47	51	53	59											
28						54	58	62	70	74	78	86	93	97	109	117	124	136	148							
38									70	74	78	86	93	97	109	117	124	136	148	156	163	175				
42												136	149	155	174	186	198	217	235	248	260	279	285	297	310	
48												199	217	226	253	271	290	317	344	362	380	407	416	434	452	498

Ordering example:

ROTEX® GS 24	ZR3	1200 mm	98 Sh A-GS	7.5 - Ø24		7.5 - Ø24	
Coupling size	Type	Shaft distance dimension (LR)	Spider hardness	Hub type	Finish bore	Hub type	Finish bore

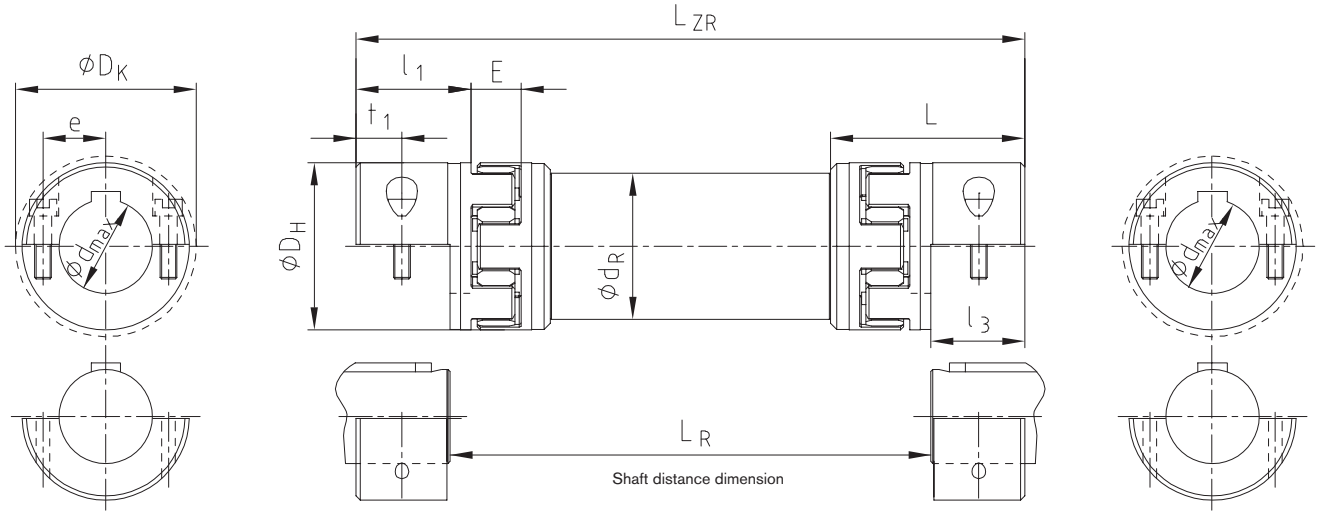

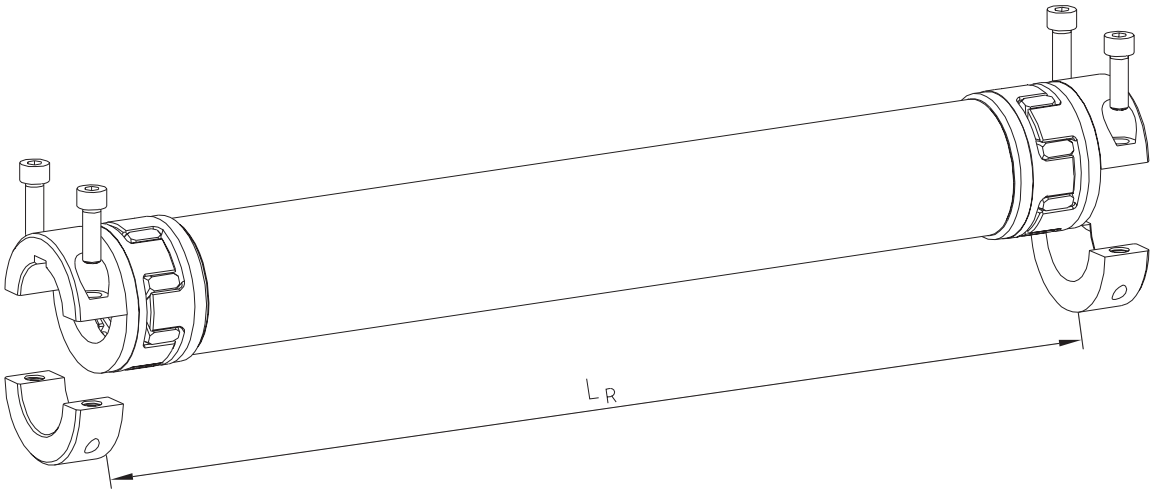

Hub types

Type 7.5

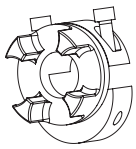

Clamping hub type DH without feather keyway for double-cardanic connections

Type 7.6

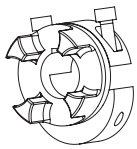

Clamping hub type DH with feather keyway for double-cardanic connections

ROTEX® GS ZR1 und ZR2
Backlash-free intermediate shaft couplings

Intermediate shaft couplings with steel pipe/steel shaft

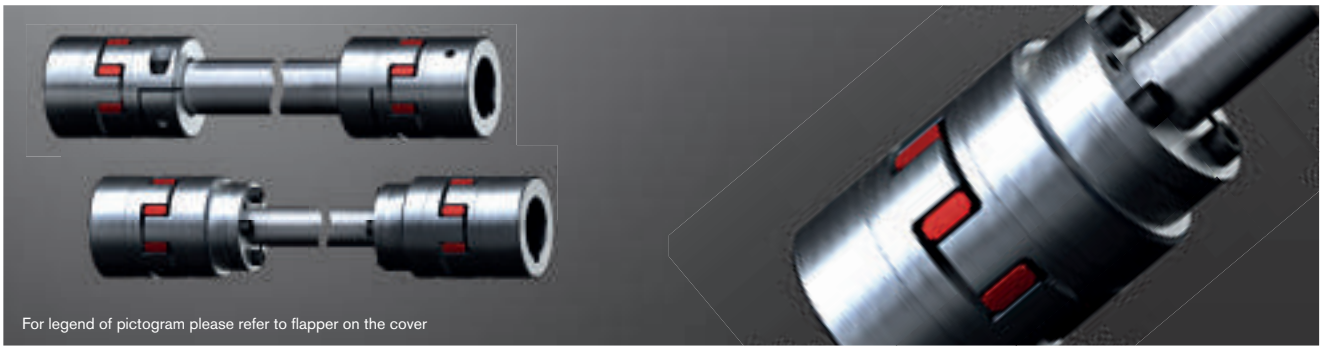

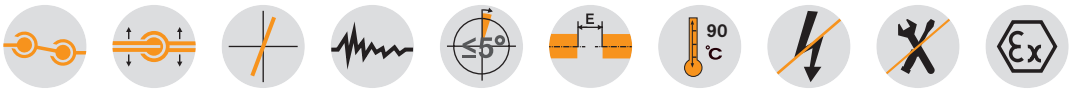

ROTEX® GS Type ZR1

Size	Spider torque T_{KN} [Nm] [1]		Maximum finish bore	Dimensions [mm]											Cyl. screw DIN EN ISO 4762 – 8.8	Tightening torque T_A [Nm]	Friction torque T_R [Nm]
	98 Sh-A	64 Sh-D	d [2]	D_H	l_1; l_2	L	E	b	s	B	L_{R1}	Minimum dimension for L_{R1}	L_{ZR1}	d_R [3]	Mxl		
14 ZR1	12,5	16,0	16	30	11	35	13	10	1,5	11,5	Pease mention with inquiries and orders	71	L_{R1}+22	14x2,5	M3x12	1,34	6,1
19 ZR1	21,0	26,0	24	40	25	66	16	12	2,0	14,0		110	L_{R1}+50	20x3,0	M6x16	10,5	34
24 ZR1	60	75	28	55	30	78	18	14	2,0	16,0		128	L_{R1}+60	25x2,5	M6x20	10,5	45
28 ZR1	160	200	38	65	35	90	20	15	2,5	17,5		145	L_{R1}+70	35x4,0	M8x25	25	105
38 ZR1	325	405	45	80	45	114	24	18	3,0	21,0		180	L_{R1}+90	40x4,0	M8x30	25	123

ROTEX® GS Type ZR2

Size	Spider torque T_{KN} [Nm] [1]		Max-imum finish bore	Dimensions [mm]											Precision tube [mm]	[Nm²/rad]	Clamping set size KTR 250	Clamping screws DIN EN ISO 4762–12.9	Tightening torque T_A [Nm]
	98 Sh-A	64 Sh-D	d [2]	D_H	l_1; l_2	l_3	L	E	b	s	B	L_{R2}	Minimum dimension for L_{R2}	L_{ZR2}	d_R	C_2 [4]	dxD	Mxl	
14 ZR2	12,5	16,0	16	30	11	26	50	13	10	1,5	11,5	Pease mention with inquiries and orders	109	L_{R2}+22	10x2,0	68,36	10x16	M4x10	5,2
19 ZR2	21,0	26,0	24	40	25	26	67	16	12	2,0	14,0		120	L_{R2}+50	12x2,0	130	12x18	M4x10	5,2
24 ZR2	60	75	28	55	30	38	86	18	14	2,0	16,0		156	L_{R2}+60	20x3,0	954,9	20x28	M6x18	17,0
28 ZR2	160	200	38	65	35	45	100	20	15	2,5	17,5		177	L_{R2}+70	25x2,5	1811	25x34	M6x18	17,0
38 ZR2	325	405	45	80	45	45	114	24	18	3,0	21,0		192	L_{R2}+90	32x3,5	5167	32x43	M6x18	17,0
42 ZR2	450	560	55	95	50	52	128	26	20	3,0	23,0		214	L_{R2}+100	40x4,0	11870	40x53	M6x18	17,0
48 ZR2	525	655	62	105	56	70	154	28	21	3,5	24,5		261	L_{R2}+112	45x4,0	17486	45x59	M8x22	41,0
55 ZR2	685	825	74	120	65	80	175	30	22	4,0	26,0		288	L_{R2}+130	55x4,0	33543	55x71	M8x22	41,0
65 ZR2	940	1175	80	135	75	80	185	35	26	4,5	30,5		387	L_{R2}+150	60x4,0	44362	60x77	M8x22	41,0

[1] Other spiders/selection see page 18 et seqq.
[2] Depending on hub type. Hub types can be freely selected, for summary see page 124
[3] Has to be remachined, if necessary
[4] Torsion spring stiffness with a length of 1 m of intermediate pipe
For inquiries and orders please specify the shaft distance dimension LR1/LR2 along with the maximum speed to review the critical bending speed.
With vertical application a support washer has to be used (please specify in your order).
Straightness and concentricity of pipes as per DIN EN 10305-1

Ordering example:

ROTEX® GS 24	ZR1	1000 mm	98 Sh-A-GS	1.0 - Ø24		2.5 - Ø24	
Coupling size	Type	Shaft distance dimension (L)	Spider hardness	Hub type	Finish bore	Hub type	Finish bore

Type ZR1

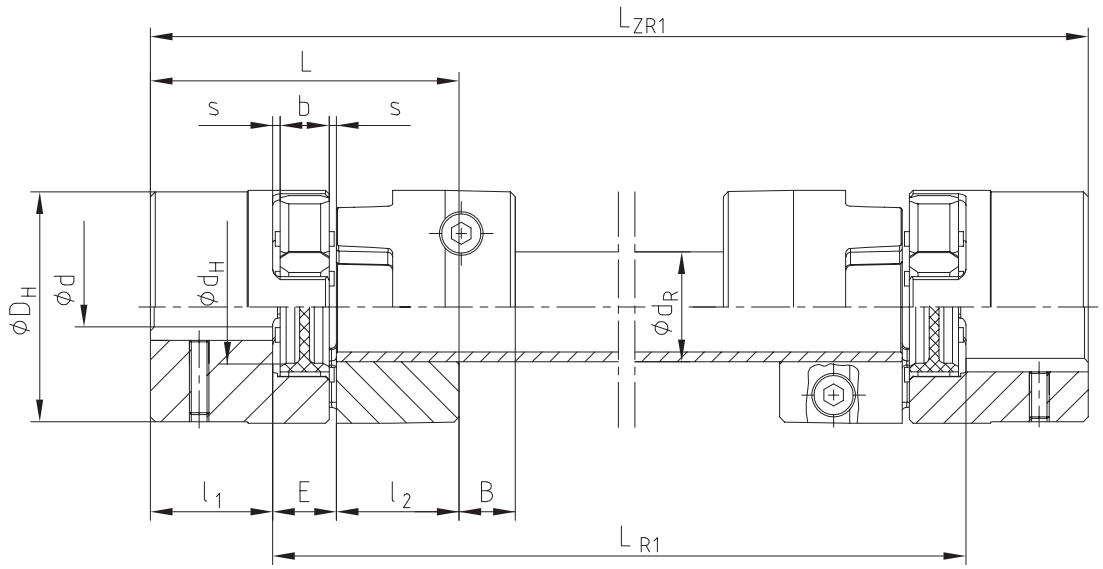

Type ZR2

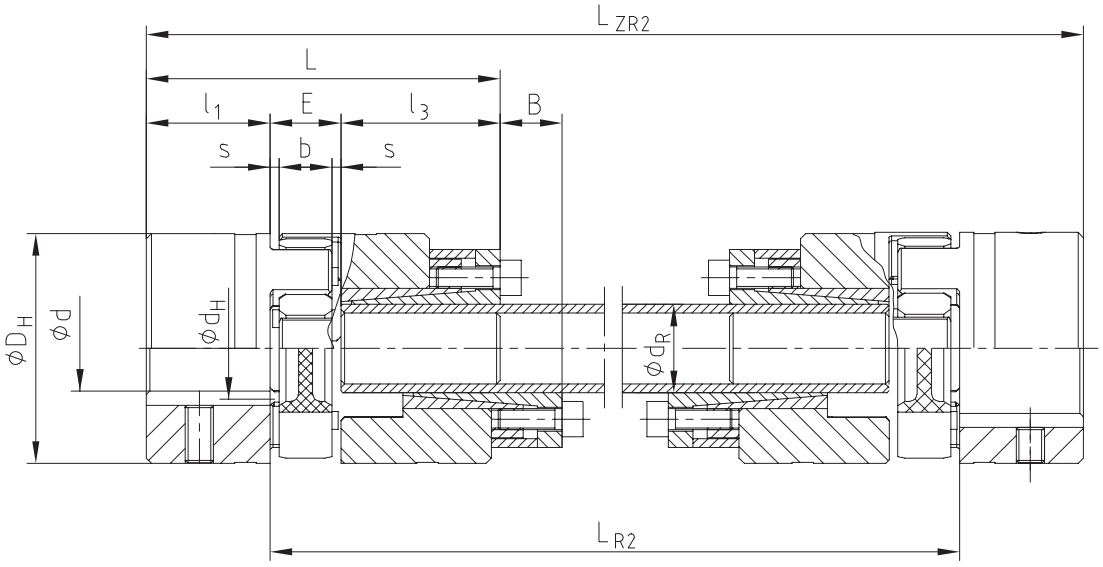

TOOLFLEX®
Metal bellow-type couplings

Technical description

TOOLFLEX® is a metal bellow-type coupling, a coupling system which has proven its worth in the field in many cases. The metal bellow compensates perfectly for axial, radial and angular displacements. At the same time its geometric shape allows for high torsional stiffness and a low mass moment of inertia. TOOLFLEX® is manufactured in twelve sizes for maximum torques up to 600 Nm.
Its main application ranges are both positioning drives, e. g. ball spindles with a high incline, and indexing tables or planetary and worm gears with small gear ratios.

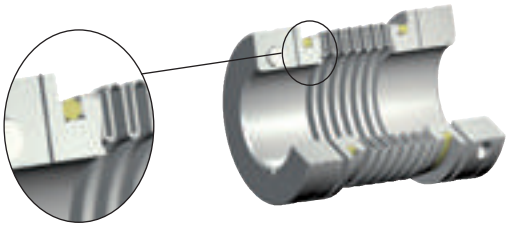

Subject to its well-proven joint procedure a non-positive, backlash-free connection of the aluminium hubs with the multilayer bellows made from stainless steel is generated. The flanged insert connection for sizes 16 to 55 ensures a torque transmission of every single bellow layer. Since TOOLFLEX®is a metal coupling, it remains fatigue-endurable in the high temperature range up to a maximum of 200 °C. Apart from that it is resistant to the effect of media or critical operating conditions, respectively.

The well-known shaft-hub-connection by means of clamping hubs ensures an easy assembly by a radial clamping screw.
Subject to two slots in the hub there is no deformation of the bellow when tightening the clamping screw.
For higher friction torques type KN with taper hubs can be used.

clamping hub with two slots

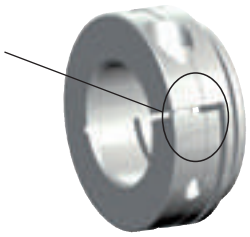

Types



Type with thread for setscrews



Type with clamping hubs



Type KN



Type PI



Type CF

Summary

Size	Type	Bellow-hub-connection	Thread for setscrews (hub type 1.0/1.1)			Clamping hubs (hub type 2.5/2.6)			KN			PI			CF		
			Torque of bellow T_{KN} [Nm]	Torque of bellow T_K max. [Nm]	Max. speed [rpm]	Torque of bellow T_{KN} [Nm]	Torque of bellow T_K max. [Nm]	Max. speed [rpm]	Torque of bellow T_{KN} [Nm]	Torque of bellow T_K max. [Nm]	Max. speed [rpm]	Torque of bellow T_{KN} [Nm]	Torque of bellow T_K max. [Nm]	Max. speed [rpm]	Torque of bellow T_{KN} [Nm]	Torque of bellow T_K max. [Nm]	Max. speed [rpm]
5	S	**Bonded** Maximum ambient temperature 100°C	0,1	0,15	47700												
	M																
7	S		1	1,5	31800	1	1,5	31800									
	M																
9	S		1,5	2,25	23800	1,5	2,25	23800									
	M																
12	S		2	3	19000	2	3	19100									
	M																
16	S	**Flanged** Maximum ambient temperature 200°C	5	7,5	14900	5	7,5	14900									
	M																
20	S		15	22,5	11900	15	22,5	11950				15	22,5	11950			
	M																
30	S					35	52,5	8700	35	52,5	15280	35	52,5	8700	35	52,5	8700
	M																
38	S					65	97,5	7350	65	97,5	12600	65	97,5	7350	65	97,5	7350
	M																
42	S					95	142,5	6820	95	142,5	11580	95	142,5	6820	95	142,5	6820
	M																
45	S					170	255	5750	170	255	9300	170	255	5750	170	255	5750
	M																
NEW 55 Al	S					340	510	4800									
	M																
55	S	**Welded** Maximum ambient temperature 200°C				340	510	4800	340	510	7870	340	510	4800			
	M																
65	S					600	900	3850									
	M																

Hub types

Due to the numerous applications of TOOLFLEX® for many different applications and mounting situations, this coupling system is available with various hub designs and two different lengths of bellows. A combination of the components forms a type.
TOOLFLEX® is supplied as a complete unit; a supply of individual components is not possible.



Type 1.0
with feather keyway and setscrew

Positive locking power transmission. Perm. torque depending on the permissible surface pressure. Not suitable for backlash-free power transmission with heavily reversing operation.



Type 1.1 without keyway, with setscrew

Non-positive torque transmission, suitable for backlash-free transmission of very small torques.



Type 1.3 with spline bore

Positive locking power transmission. Spline on request of customers (e. g. sfor shaft with flattening)

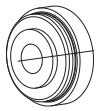

Type 1.2 without feather keyway, without thread for setscrews

For low torques Suitable for bonding or pressing onto the shaft.



Type 2.5 Clamping hub double slot, without feather keyway

Frictionally engaged, backlash-free shaft-hub-connection-. Transmittable torques depending on bore diameter



Type 2.6 Clamping hub double slot, with feather keyway

Positive locking power transmission with additional frictionally engaged condition. The frictionally engaged condition prevents or reduces reverse backlash, respectively. Surface pressure of the keyway connection is reduced.

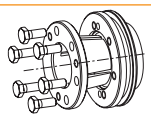

Type 6.5 Taper hub KN

Integrated frictionally engaged shaft-hub-connection for the transmission of higher torques in the area of the shaft-hub-connection.

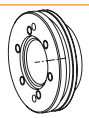

Flange

Flange to connect to customer's component. Special dimensions on request.



Type 7.5 Clamping hub type DH without feather keyway for double-cardanic connection

Frictionally engaged, backlash-free shaft-hub-connection for radial coupling assembly. Transmittable torques depend on bore diameter.

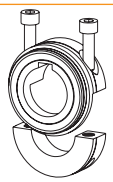

Type 7.6 Clamping hub type DH with feather keyway for double-cardanic connection

Positive locking power transmission with additional frictional connection for radial coupling assembly. The frictional connection prevents or reduces reverse backlash. Surface pressure of the feather keyway connection is reduced.



Type 7.8 Clamping hub type H without feather keyway for single-cardanic connection

Frictionally engaged, backlash-free shaft-hub-connection for radial coupling assembly. Transmittable torques depend on bore diameter.



Type 7.9 Clamping hub type H with feather keyway for single-cardanic connection

Positive locking power transmission with additional frictional connection for radial coupling assembly. The frictional connection prevents or reduces reverse backlash. Surface pressure of the feather keyway connection is reduced.



Bellow type S

Bellow with 4 layers made of stainless steell; compact design with high torsion spring stiffness.

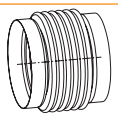

Bellow type M

Bellow with 4 layers made of stainless steel; realizing large shaft distance dimensions and displacements

Special designs on request of customers

Special bellows

Bellows with 1, 2 or 3 layers available on request.

Type S: Hubs with threads for setscrews



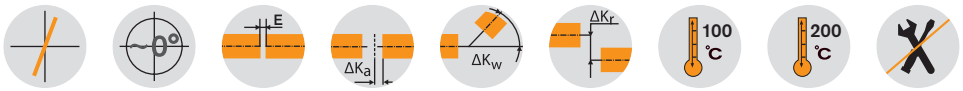

TOOLFLEX® S type 1.1

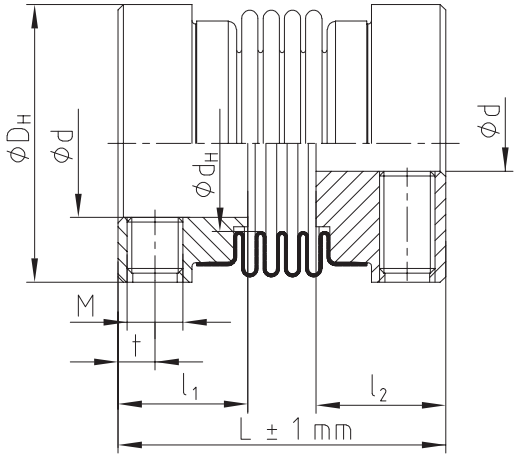

TOOLFLEX® S with thread for setscrews (type 1.1) Hub material aluminium/bellow material stainless steel

Size	Bellow-hub-connection	Torque of bellow T_{KN} [1] [Nm]	Max. speed n [rpm]	Dimensions [mm]									Perm. displacements			Torsion spring stiffness C_T [Nm/rad]	Weight [3] [kg]
				Finish bore		General				Set screw							
				min. d	max. d	D_H	d_H	L	l_1; l_2	M	t	Number [2] z	Axial [mm]	Radial [mm]	Angular [degrees]		
5		0,1	47700	2	5	10	6	15	6	M2	1,8	1	±0,30	0,10	0,7	97	0,0027
7	[4]	1,0	31800	3	8	15	9	18	7	M3	2,0	1	±0,30	0,10	0,7	390	0,005
9		1,5	23800	3	10	20	12	21	8	M3	2,2	2	±0,35	0,15	1,0	750	0,010
12		2,0	19000	4	14	25	16	27,5	11	M4	2,8	2	±0,40	0,15	1,0	1270	0,017
16	[5]	5,0	14900	5	18	32	20	37	13	M5	4	2	±0,30	0,15	1,0	4500	0,046
20		15	11900	6	25	40	27	42	15	M5	5	2	±0,40	0,15	1,0	9600	0,076

[1] For selection see page 18 et seqq.
[2] Quantity each hub; from size 9: 2x120° offset
[3] Details referring to the overall coupling with max. bore
[4] Bonded
[5] Flanged

Hub designs

Type 1.0



Hub with feather keyway and setscrew

Type 1.1



Hub without feather keyway, with setscrew

Type 1.3



Hub with spline bore

Type 1.2



Hub without feather keyway, without setscrew

Ordering example:	TOOLFLEX® 7 S	1.1 - Ø4		1.1 - Ø6	
	Size and type of coupling	Hub type	Finish bore	Hub type	Finish bore

Type M: Hubs with threads for setscrews

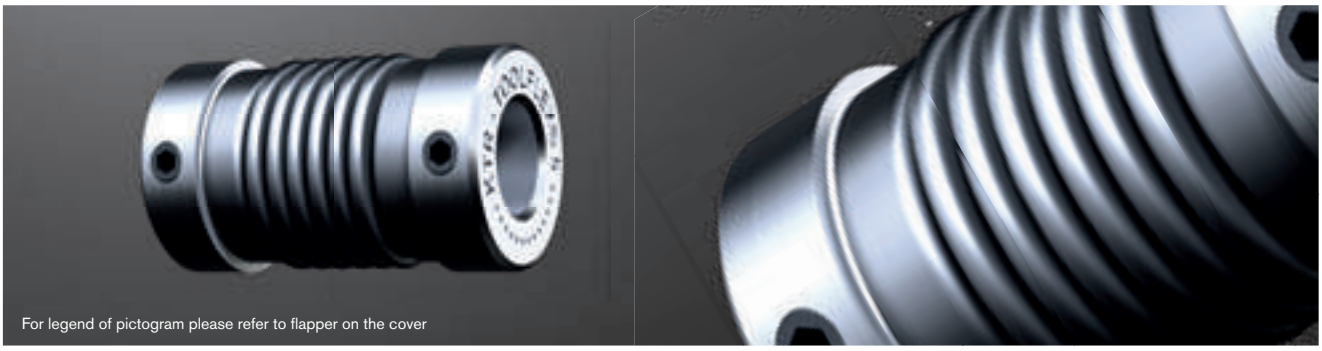



TOOLFLEX® M type 1.1

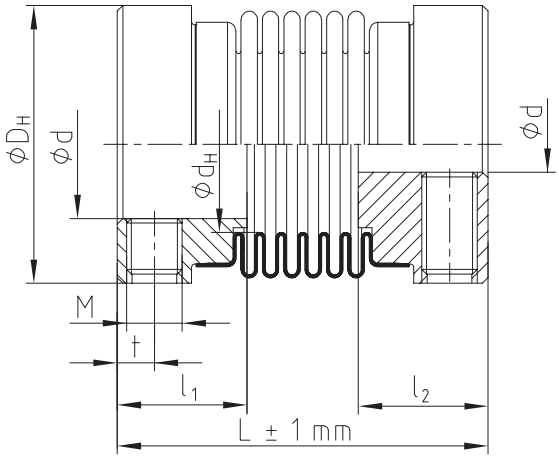

TOOLFLEX® M with thread for setscrews (type 1.1) Hub material aluminium/bellow material stainless steel

Size	Bellow-hub-connection	Torque of bellow T_{KN} [1] [Nm]	Max. speed n [rpm]	Dimensions [mm]									Perm. displacements			Torsion spring stiffness C_T [Nm/rad]	Weight [3] [kg]
				Finish bore		General				Set screw							
				min. d	max. d	D_H	d_H	L	l_1; l_2	M	t	Number [2] z	Axial [mm]	Radial [mm]	Angular [degrees]		
5		0,1	47700	2	5	10	6	17	6	M2	1,8	1	±0,40	0,15	1,0	75	0,003
7	[4]	1,0	31800	3	8	15	9	20	7	M3	2,0	1	±0,40	0,15	1,0	300	0,006
9		1,5	23800	3	10	20	12	24	8	M3	2,2	2	±0,50	0,20	1,5	580	0,011
12		2,0	19000	4	14	25	16	31	11	M4	2,8	2	±0,60	0,20	1,5	980	0,019
16	[5]	5,0	14900	5	18	32	20	41	13	M5	4	2	±0,50	0,20	1,5	3050	0,049
20		15	11900	6	25	40	27	49	15	M5	5	2	±0,60	0,20	1,5	6600	0,082

[1] For selection see page 18 et seqq.
[2] Quantity each hub; from size 9: 2x120° offset
[3] Details referring to the overall coupling with max. bore
[4] Bonded
[5] Flanged

Hub designs

Type 1.0



Hub with feather keyway and setscrew

Type 1.1



Hub without feather keyway, with setscrew

Type 1.3



Hub with spline bore

Type 1.2



Hub without feather keyway, without setscrew

Ordering example:	TOOLFLEX® 7 M	1.1 - Ø4		1.1 - Ø6	
	Size and type of coupling	Hub type	Finish bore	Hub type	Finish bore

TOOLFLEX® S
Metal bellow-type couplings

Type S: With clamping hubs

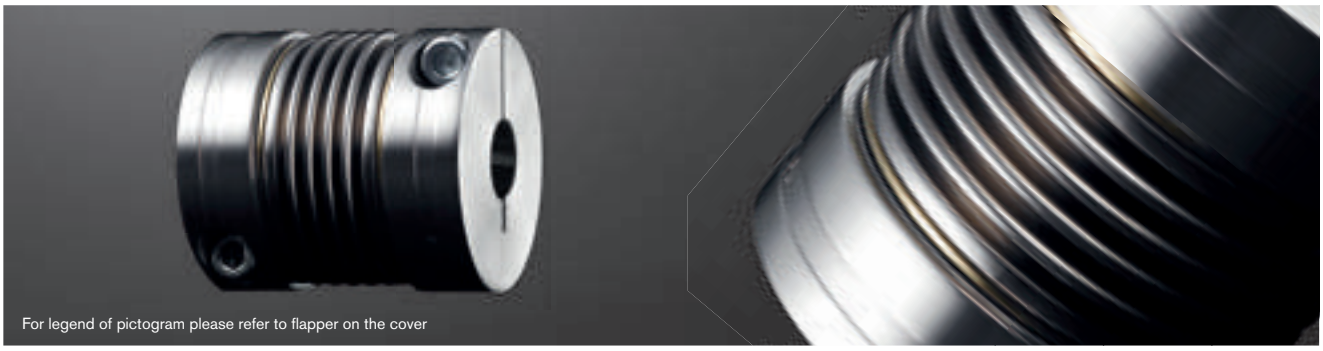

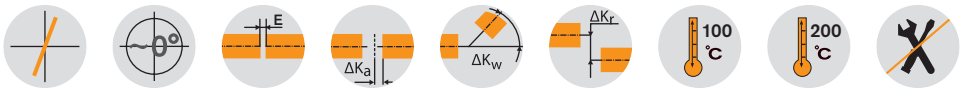

TOOLFLEX® Type S with clamping hubs

Size	Dimensions [mm]											
	Min./max. finish bore		General					Clamping screws DIN EN ISO 4762				
	min. d	max. d	L	l_1; l_2	E	D_H	d_H	M_1	D_3	t_1	e_1	T_A [Nm]
7	3	7	24	9	6	15	9	M2	16,5	3,2	5	0,37
9	3	9	29	11	7	20	12	M2,5	21,5	3,5	7,1	0,76
12	4	12	34,5	13	8,5	25	16	M3	26,5	4	8,5	1,34
16	5	16	45	17,0	11	32	20	M4	35,0	5	12,0	2,9
20	8	20	55	21,5	12	40	27	M5	43,5	6	14,5	6
30	10	30	63	23,0	17	55	33	M6	58,0	7	19	10
38	12	38	69	25,5	18	65	42	M8	72,6	9	25	25
42	14	42	84	30,0	24	70	46	M8	76,1	9	27	25
45	14	45	86,5	32,0	22,5	83	58	M10	89,0	11	30	49
NEW 55 Al	20	55	111	40,0	31	100	73	M12	106,0	14	37	86
55 [3]	20	55	111	40,0	31	100	73	M12	106,0	14	37	120
65 [3]	30	65	126	45,0	36	125	95	M14	127,2	15	45	185

Technical data

Size	Bellow-hub-connection	Torque of bellow T_{KN} [1] [Nm]	Max. speed n [rpm]	Hub material	Moment of inertia [2] [x10^{-6}kgm^2]	Torsion spring stiffness C_T [Nm/rad]	Axial spring stiffness [N/mm]	Radial spring stiffness [N/mm]	Perm. displacements			Weight [2] [kg]
									Axial [mm]	Radial [mm]	Angular [degrees]	
7	Bonded	1	31800	Aluminium	0,26	390	—	—	±0,3	0,10	0,7	0,007
9		1,5	23800	Aluminium	0,97	750	—	—	±0,35	0,15	1,0	0,014
12		2	19100	Aluminium	2,6	1270	—	—	±0,4	0,15	1,0	0,025
16		5	14900	Aluminium	9	4500	43	138	±0,3	0,15	1,0	0,06
20		15	11950	Aluminium	30	9600	63	189	±0,4	0,15	1,0	0,12
30		35	8700	Aluminium	114	17800	97	233	±0,5	0,20	1,5	0,24
38	Flanged	65	7350	Aluminium	245	37400	108	318	±0,6	0,20	1,5	0,35
42		95	6820	Aluminium	396	54700	120	499	±0,6	0,20	1,5	0,49
45		170	5750	Aluminium	931	95800	132	738	±0,9	0,20	1,5	0,82
55 Al		340	4800	Aluminium	1665	144100	160	894	±1,1	0,25	1,5	1,50
55 [3]		340	4800	Stahl	4996	144100	160	894	±1,0	0,25	1,5	3,20
65 [3]		600	3850	Stahl	13318	322740	212	1365	±1,0	0,30	1,5	5,50

[1] For selection see page 18 et seqq.
[2] Details referring to the overall coupling with max. bore
[3] Hub made of steel welded to bellow

Review of shaft-hub-connection: Friction torques for hub type 2.5

Size	Ø3	Ø4	Ø5	Ø6	Ø7	Ø8	Ø9	Ø10	Ø11	Ø12	Ø14	Ø15	Ø16	Ø18	Ø19	Ø20	Ø24	Ø25	Ø28	Ø30	Ø32	Ø35	Ø38	Ø40	Ø42	Ø45	Ø50	Ø55	Ø60	Ø65
7	0,84	0,91	0,97	1,04	1,10																									
9	1,87	1,98	2,09	2,20	2,31	2,41	2,52																							
12		3,48	3,65	3,81	3,98	4,14	4,31	4,48	4,64	4,81																				
16			8,5	8,8	9,1	9,4	9,7	9,9	10,2	10,5	11,1	11,4	11,7																	
20						17,6	18,1	18,6	19,1	19,5	20,5	21,0	21,4	22,4	22,9	23,3														
30									33,1	33,8	35,1	35,8	36,5	37,8	38,5	39,2	41,9	42,5	44,6	45,9										
38											79,2	80,4	81,7	84,2	85,4	86,6	91,6	92,8	96,5	99,0	102	105	109							
42											84,2	85,4	86,6	89,1	90,3	91,6	96,5	97,8	102	104	106	110	114	116	119					
45																157	165	167	173	177	181	187	193	197	200	206				
55 Al																270	281	284	293	298	304	313	321	327	333	341	356	371		
55 [3]																	397	401	413	421	429	442	454	462	470	482	502	523		
65 [3]																				720	732	750	768	780	792	810	840	870	900	930

Ordering-example:

TOOLFLEX® 30 S	2.5	Ø25	2.5	Ø30
Size and type of coupling	Hub type	Finish bore	Hub type	Finish bore

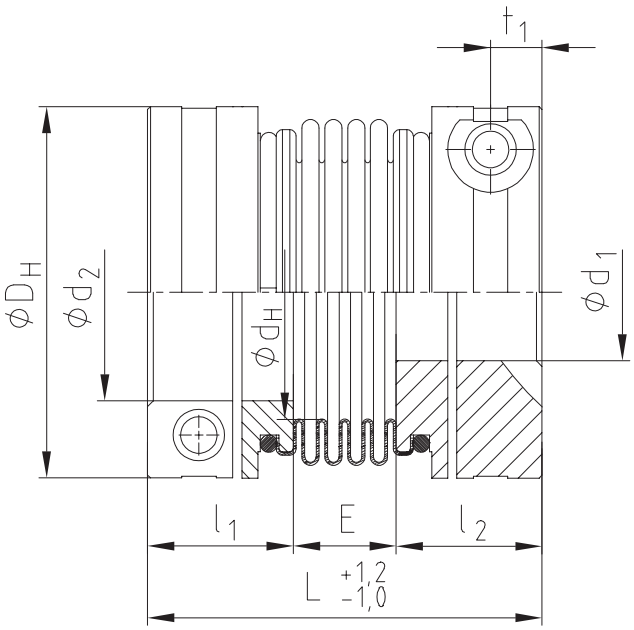

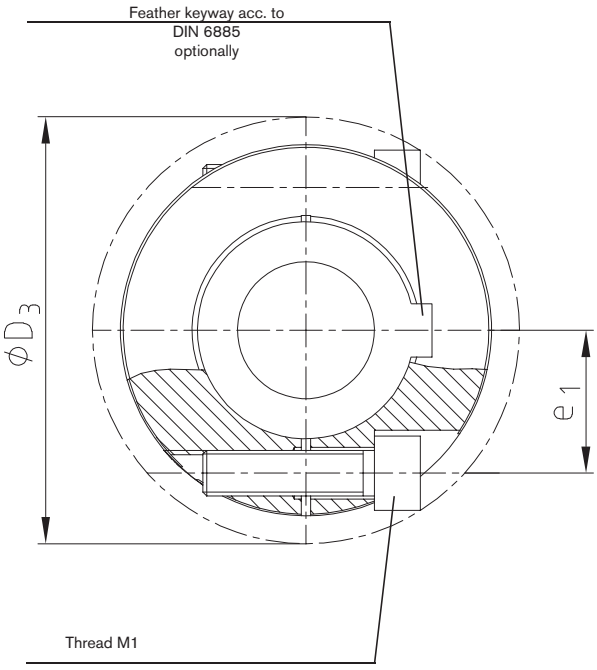

Other types:
Type for FANUC motors

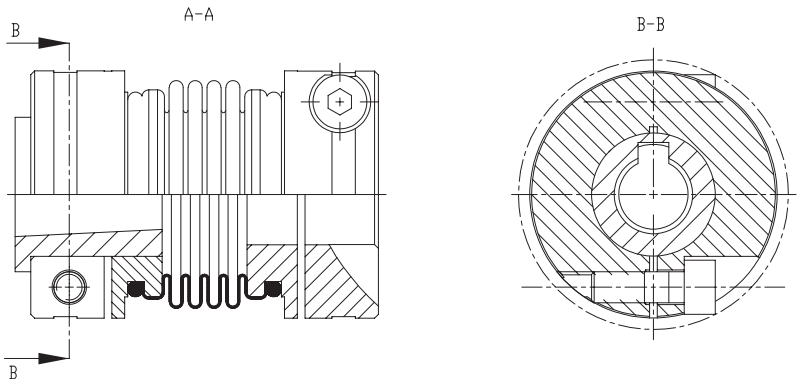

Hub types

Type 2.5



Clamping hub, double slotted, without feather keyway

Type 2.6



Clamping hub, single slotted, with feather keyway

TOOLFLEX® M
Metal bellow-type couplings

Type M: With clamping hubs

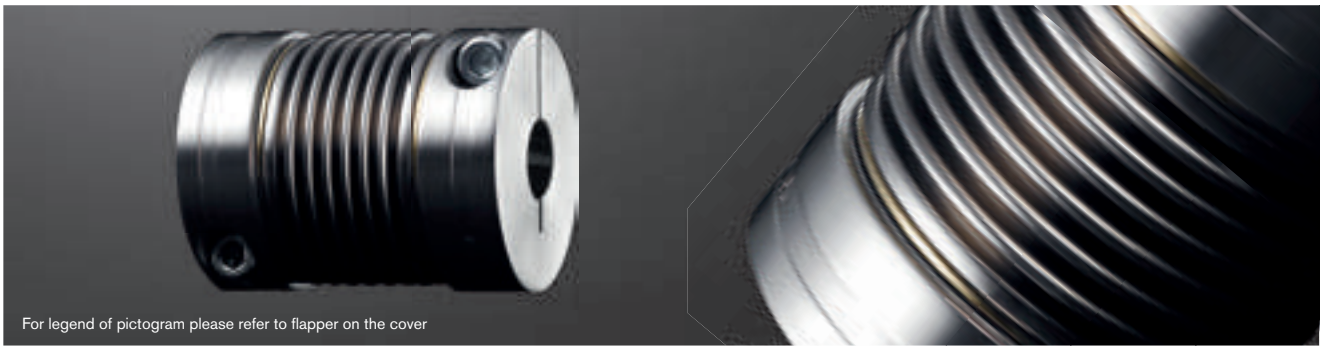

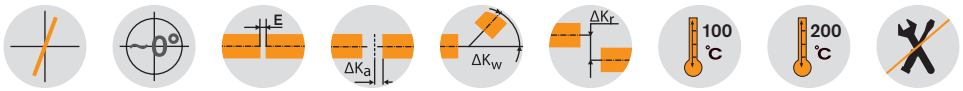

TOOLFLEX® Type M with clamping hubs Hub material aluminium (size 55/65 steel/bellow material stainless steel												
Size	Dimensions [mm]											
	Min./max. finish bore		General					Clamping screws DIN EN ISO 4762				
	min. d	max. d	L	l_1; l_2	E	D_H	d_H	M_1	D_3	t_1	e_1	T_A [Nm]
7	3	7	26	9	8	15	9	M2	16,5	3,2	5	0,37
9	3	9	32	11	10	20	12	M2,5	21,5	3,5	7,1	0,76
12	4	12	38	13	12	25	16	M3	26,5	4	8,5	1,34
16	5	16	49	17,0	15	32	20	M4	35,0	5	12	2,9
20	8	20	62	21,5	19	40	27	M5	43,5	6	14,5	6
30	10	30	72	23,0	26	55	33	M6	58,0	7	19	10
38	12	38	81	25,5	30	65	42	M8	72,6	9	25	25
42	14	42	95	30,0	35	70	46	M8	76,1	9	27	25
45	14	45	103	32,0	39	83	58	M10	89,0	11	30	49
NEW 55 Al	20	55	125	400	45	100	73	M11	106,0	14	37	86
55 [3]	20	55	125	40,0	45	100	73	M12	106,0	14	37	120
65 [3]	30	65	142	45,0	52	125	95	M14	127,2	15	45	185

Technical data												
Size	Bellow-hub-connection	Torque of bellow T_{KN} [Nm] [1]	Max. speed n [min^{-1}]	Hub material	Moment of inertia [2] [$x10^{-6}kgm^2$]	Torsion spring stiffness C_T [Nm/rad]	Axial spring stiffness [N/mm]	Radial spring stiffness [N/mm]	Perm. displacements			Weight [2] [kg]
									Axial [mm]	Radial [mm]	Angular [deg.]	
7	Bonded	1	31800	Aluminium	0,3	300	—	—	±0,4	0,15	1,0	0,008
9		1,5	23800	Aluminium	1,0	580	—	—	±0,5	0,20	1,5	0,015
12		2	19100	Aluminium	2,7	980	—	—	±0,6	0,20	1,5	0,03
16	Flanged	5	14900	Aluminium	10	3050	29	92	±0,5	0,20	1,5	0,06
20		15	11950	Aluminium	32	6600	42	126	±0,6	0,20	1,5	0,14
30		35	8700	Aluminium	123	14800	65	155	±0,8	0,25	2,0	0,31
38		65	7350	Aluminium	262	24900	72	212	±0,8	0,25	2,0	0,45
42		95	6820	Aluminium	427	36500	80	333	±0,8	0,25	2,0	0,52
45		170	5750	Aluminium	1020	64000	88	492	±1,0	0,25	2,0	1,13
55 Al		340	4800	Aluminium	1706	96100	107	598	±1,1	0,30	20	2,0
55 [3]		340	4800	Stahl	5118	96100	107	598	±1,0	0,30	2,0	3,3
65 [3]		600	3850	Stahl	13727	226550	135	910	±2,0	0,35	2,0	5,6

[1] For selection see page18 ff.
[2] Details referring to the overall coupling with max. bore
[3] Hub made of steel welded to bellow

Review of shaft-hub-connection: Friction torques for hub type 2.5																														
Size	Ø3	Ø4	Ø5	Ø6	Ø7	Ø8	Ø9	Ø10	Ø11	Ø12	Ø14	Ø15	Ø16	Ø18	Ø19	Ø20	Ø24	Ø25	Ø28	Ø30	Ø32	Ø35	Ø38	Ø40	Ø42	Ø45	Ø50	Ø55	Ø60	Ø65
7	0,84	0,91	0,97	1,04	1,10																									
9	1,87	1,98	2,09	2,20	2,31	2,41	2,52																							
12		3,48	3,65	3,81	3,98	4,14	4,31	4,48	4,64	4,81																				
16			8,5	8,8	9,1	9,4	9,7	9,9	10,2	10,5	11,1	11,4	11,7																	
20						17,6	18,1	18,6	19,1	19,5	20,5	21,0	21,4	22,4	22,9	23,3														
30									33,1	33,8	35,1	35,8	36,5	37,8	38,5	39,2	41,9	42,5	44,6	45,9										
38											79,2	80,4	81,7	84,2	85,4	86,6	91,6	92,8	96,5	99,0	102	105	109							
42											84,2	85,4	86,6	89,1	90,3	91,6	96,5	97,8	102	104	106	110	114	116	119					
45																157	165	167	173	177	181	187	193	197	200	206				
55 Al																270	281	284	293	298	304	313	321	327	333	341	356	371		
55 [3]																	397	401	413	421	429	442	454	462	470	482	502	523		
65 [3]																				720	732	750	768	780	792	810	840	870	900	930

Ordering-example:	TOOLFLEX® 30 M	2.5	Ø25	2.5	Ø30
	Size and type of coupling	Hub type	Finish bore	Hub type	Finish bore

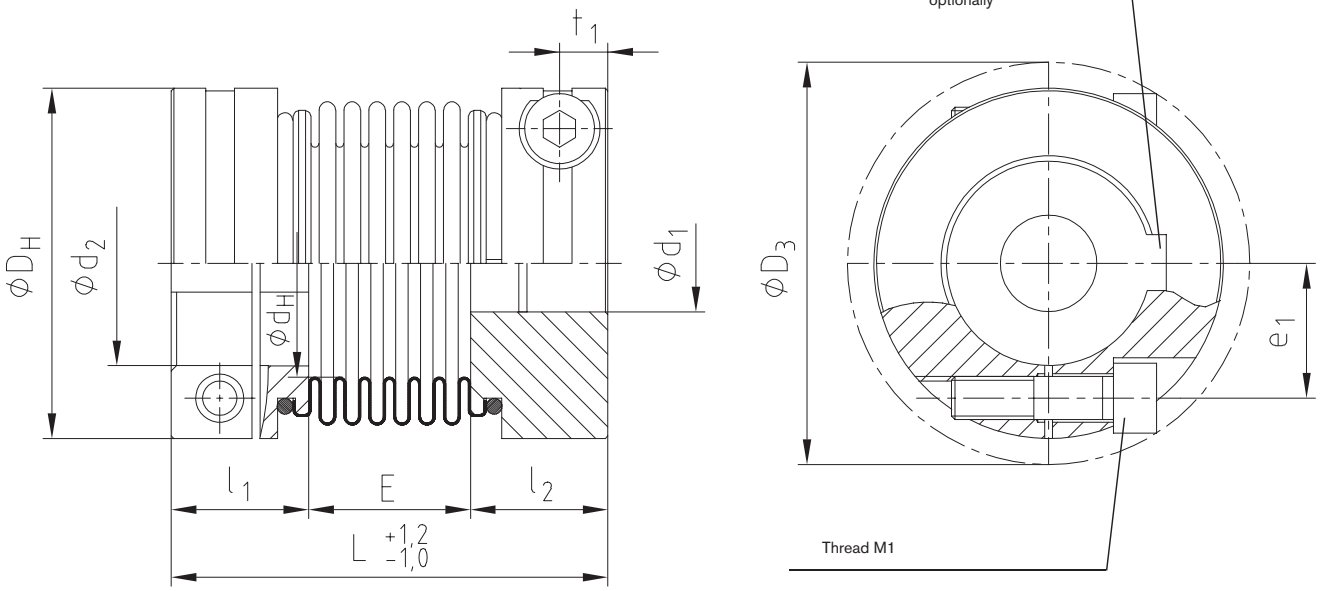

Other types:
Type for FANUC motors

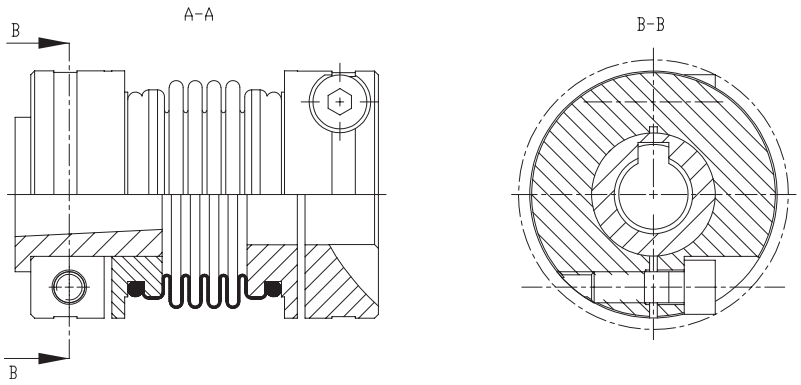

Hub types

Type 2.5



Clamping hub, double slotted, without feather keyway

Type 2.6



Clamping hub, single slotted, with feather keyway

Taper hubs for high friction torques



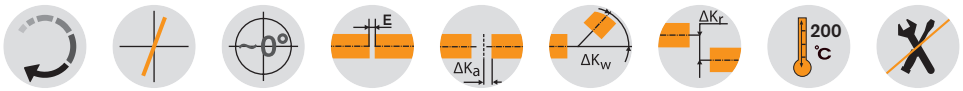

TOOLFLEX® Type S-KN Hub material steel/bellow stainless steel

Size	Torque of bellow TKN [1] [Nm]	Max. speed n [rpm]	Dimensions [mm]															Weight [5] [kg]
			Finish bore		L	Ltotal.	l1; l2	DH	D1	D2	Clamping screws			Pull-off threads				
			min. d	max.d	4 [2]	4 [2]					M	TA [Nm]	Number z	M1	Number z	TA1 [4] [Nm]		
30	35	15280	12	22	48	54	22	50	43	47	M4	2,9	12	M4	6	1,2		0,4
38	65	12600	12	28	56	63	26	60,5	52	56	M5	6	12	M5	6	1,4		0,7
42	95	11580	14	35	64	71	29	66	60	63	M5	6	12	M5	6	1,4		0,8
45	170	9300	15	40	74,5	82,5	34	82	68	77	M6	14	12	M6	6	3		1,5
55 [3]	340	7870	15	56	95,5	106	40	97	95	95	M8	35	12	M8	6	6		2,5

[1] For selection see page 18 et seqq.
[2] Type S = 4 layers
[3] Hub made of steel welded to bellow
[4] After assembly of the clamping screws (M) tighten the tack thread (M_1) to the torque T_{A1} indicated.
[5] Details referring to the overall coupling with max. bore

TOOLFLEX® Type M-KN Hub material steel/bellow stainless steel

Size	Torque of bellow TKN [1] [Nm]	Max. speed n [rpm]	Abmessungen [mm]															Weight [5] [kg]
			Finish bore		L	Ltotal	l1; l2	DH	D1	D2	Clamping screws			Pull-off threads				
			min. d	max.d	6 layers [2]	6 layers [2]					M	TA [Nm]	Number z	M1	Number z	TA1 [5] [Nm]		
30	35	15280	12	22	57	63	22	50	43	47	M4	2,9	12	M4	6	1,2		0,4
38	65	12600	12	28	68	75	26	60,5	52	56	M5	6	12	M5	6	1,4		0,7
42	95	11580	14	35	75	82	29	66	60	63	M5	6	12	M5	6	1,4		0,8
45	170	9300	15	40	91	99	34	82	68	77	M6	14	12	M6	6	3		1,5
55 [3]	340	7870	15	56	109	120	40	97	95	95	M8	35	12	M8	6	6		2,5

[1] For selection see page 18 et seqq.
[2] Type M = 6 layers
[3] Hub made of steel welded to bellow
[4] After assembly of the clamping screws (M) tighten the tack thread (M_1) to the torque T_{A1} indicated.
[5] Details referring to the overall coupling with max. bore

Review of shaft-hub-connection: Friction torques for hub type 6.5

Size	Ø14	Ø15	Ø16	Ø19	Ø20	Ø24	Ø25	Ø28	Ø30	Ø32	Ø35	Ø38	Ø40	Ø42	Ø45	Ø48	Ø50	Ø55
30	50	58	66	71	79													
38		81	92	130	103	149	161	202										
42				105	117	168	131	164	189	215	257							
45					230	332	230	288	331	376	451	531	589					
55 [4]							483	606	696	792	585	690	764	843	967	1101	1194	1445

Ordering-example:

TOOLFLEX® 38 S-KN	Ø15	Ø22
Size and type of coupling	Finish bore	Finish bore

TOOLFLEX® S-KN

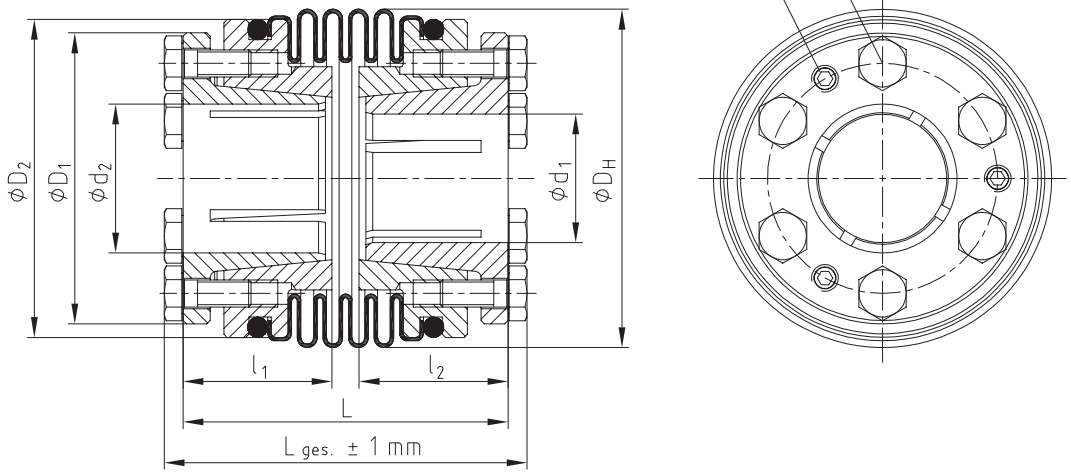

TOOLFLEX® M-KN

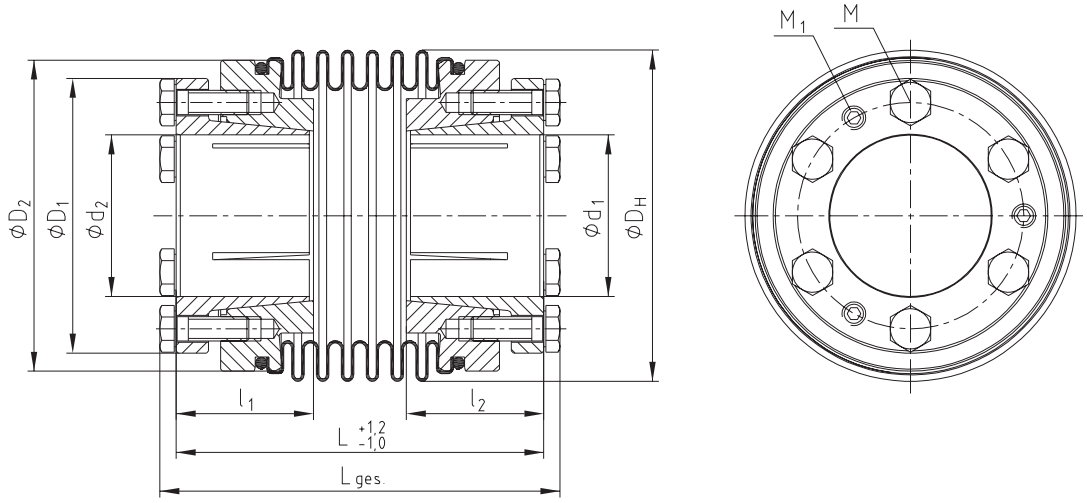

Other types:

TOOLFLEX® KN for FANUC motors

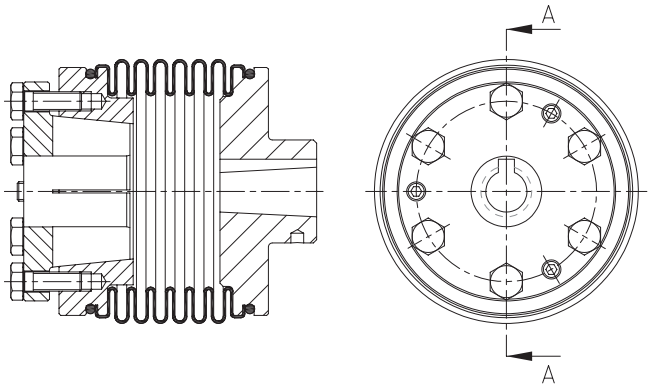

Hub types

Type 6.5

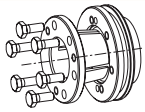

Taper hub KN

TOOLFLEX® PI
Metal bellow-type couplings

Axial plug-in

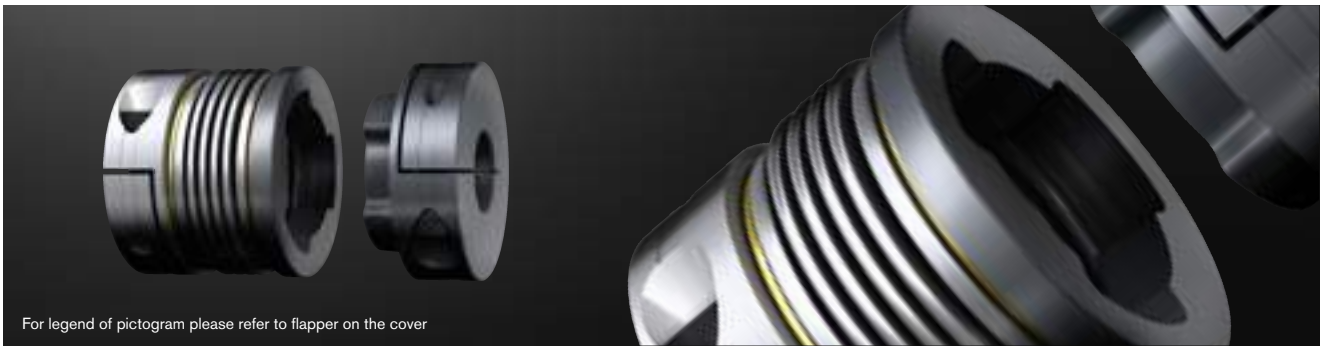

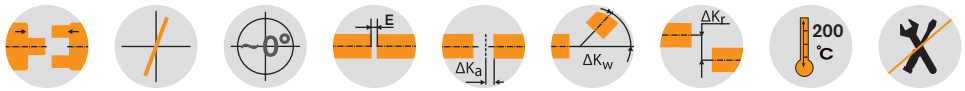

TOOLFLEX® Type S-PI Hub material aluminium/bellow stainless steel

Size	Type	Dimensions [mm]													
		General									Clamping screw				
		min. d_1;d_2	max. d_1	max.d_2	L [1]	l_1	l_2	E	D_H	H	M_1;M_2	D_3	e	t_1;t_2	T_A [Nm]
20	S	8	20	20	67,0	21,5	33,5	19,0	40	0,5 - 1	M5	43,5	14,5	6	6
30	S	10	30	28	73,5	23,0	33,5	26,0	55	0,5 - 1	M6	58,0	19,0	7	10
38	S	12	38	32	87,5	25,5	44,0	30,0	65	0,5 - 1,5	M8	72,6	25,0	9	25
42	S	14	42	35	93,0	30	39,0	35,0	70	0,5 - 1,5	M8	76,1	25,0	9	25
45	S	14	45	42	96,0	32,0	41,5	39,0	83	0,5 - 1,5	M10	89,0	30,0	11	49
55	S	20	55	55	130,0	40	58,5	31	100	0,5 - 1,5	M12	106,0	37	14	120

Technical data of TOOLFLEX® S-PI

Size	Type	Torque of bellow T_{KN} [Nm] [2]	Max. speed n [rpm]	Moment of inertia [4] [$x10^{-6}kgm^2$]	Torsion spring stiffness C_T [Nm/rad]	Axial spring stiffness [N/mm]	Radial spring stiffness [N/mm]	Perm. displacements		Weight [4] [kg]
								Radial [mm]	Angular [degrees]	
20	S	15	11950	37	6600	63	189	0,15	1,0	0,15
30	S	35	8700	140	11500	97	233	0,20	1,5	0,29
38	S	65	7350	329	21500	108	318	0,20	1,5	0,50
42	S	95	6820	396	31500	120	499	0,20	1,5	0,49
45	S	170	5750	1031	55000	132	738	0,25	1,5	0,93
55	S	340	4800	6150	144100	160	894	0,25	1,5	3,80

TOOLFLEX® Type M-PI Hub material aluminium/bellow stainless steel

Size	Type	Dimensions [mm]													
		General									Clamping screw				
		min. d_1;d_2	max. d_1	max.d_2	L [1]	l_1	l_2	E	D_H	H	M_1;M_2	D_3	e	t_1;t_2	T_A [Nm]
20	M	8	20	20	74,0	21,5	33,5	19,0	40	0,5 - 1	M5	43,5	14,5	6	6
30	M	10	30	28	82,5	23,0	33,5	26,0	55	0,5 - 1	M6	58,0	19,0	7	10
38	M	12	38	32	99,5	25,5	44,0	30,0	65	0,5 - 1,5	M8	72,6	25,0	9	25
42	M	14	42	35	104,0	30	39,0	35,0	70	0,5 - 1,5	M8	76,1	25,0	9	25
45	M	14	45	42	112,5	32,0	41,5	39,0	83	0,5 - 1,5	M10	89,0	30,0	11	49
55	M	20	55	55	143,5	40	58,5	45	100	0,5 - 1,5	M12	106,0	37	14	120

Technical data of TOOLFLEX® M-PI

Size	Type	Torque of bellow T_{KN} [Nm] [2]	Max. speed n [rpm]	Moment of inertia [4] [$x10^{-6}kgm^2$]	Torsion spring stiffness C_T [Nm/rad]	Axial spring stiffness [N/mm]	Radial spring stiffness [N/mm]	Perm. displacements		Weight [3] [kg]
								Radial [mm]	Angular [degrees]	
20	M	15	11950	38	4900	42	126	0,20	1,5	0,16
30	M	35	8700	145	10200	65	155	0,25	2,0	0,31
38	M	65	7350	346	15100	72	212	0,25	2,0	0,52
42	M	95	6820	427	22000	80	333	0,25	2,0	0,52
45	M	170	5750	1127	41000	88	492	0,30	2,0	1,00
55	M	340	4800	6270	96100	107	598	0,30	2,0	3,90

[1] When being plugged in
[2] For selection see page 18 et seqq.
[3] Figures refer to the complete coupling with max. bores

Review of shaft-hub-connection: Friction torques for hub type 2.5 for Ød$_1$/Ød$_2$

Size	Ø8	Ø9	Ø10	Ø11	Ø12	Ø14	Ø15	Ø16	Ø18	Ø19	Ø20	Ø24	Ø25	Ø28	Ø30	Ø32	Ø35	Ø38	Ø40	Ø42
20	17,6	18,1	18,6	19,1	19,5	20,5	21,0	21,4	22,4	22,9	23,3									
30				33,1	33,8	35,1	35,8	36,5	37,8	38,5	39,2	41,9	42,5	44,6	45,9					
38						79,2	80,4	81,7	84,2	85,4	86,6	91,6	92,8	96,5	99,0	102				
42						79,2	80,4	81,7	84,2	85,4	86,6	91,6	92,8	96,5	99,0	102	105			
45											157	165	167	173	177	181	187	193	197	200
55												397	401	413	421	429	442	454	462	470

Ordering example:	TOOLFLEX® 30 S-PI	d$_1$ - Ø22	d$_2$ - Ø18
	Size and type of coupling	Finish bore	Finish bore

TOOLFLEX® S-PI

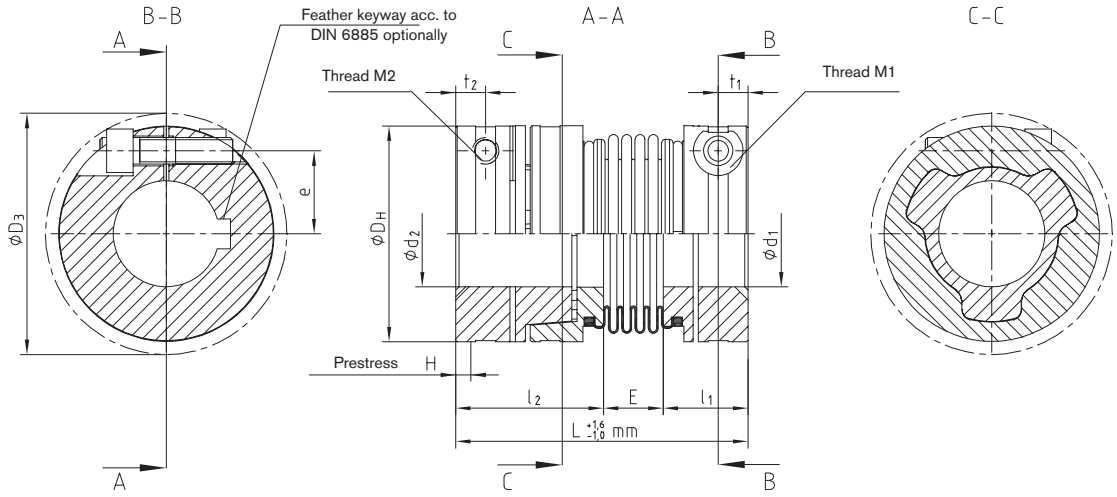

TOOLFLEX® M-PI

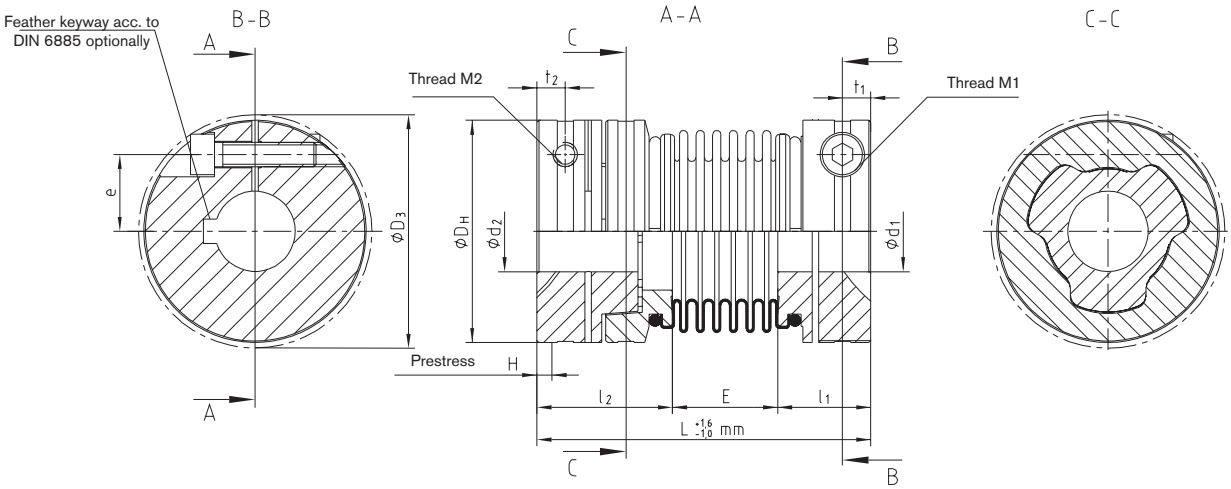

TOOLFLEX® CF
Metal bellow-type couplings

Flange programme



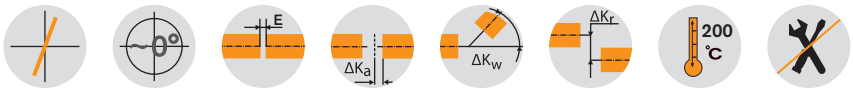

TOOLFLEX® Type S-CF Hub material aluminium (size 55 steel)/bellow stainless steel																		
Size	Finish bore		Dimensions [mm]									Clamping screw					Flange	
	min. d_1	max. d_1	D_H	D_B	D_F	d_2 H7	l_3	l_1	l_2	E	L	D_K	e_1	t_1	M	T_A	D_T	M_1
30	10	30	55	50	47	25	1,5	16	23,0	10,5	49,5	58,0	19	7	M6	10	30	M4
						29											34	
38	12	38	65	60,5	55,75	29	1,5	18	25,5	11,0	54,5	72,6	25	9	M8	25	35	M5
						36											42	
42	14	42	70	66	62,95	36	1,5	21	30,0	15,0	66,0	76,1	27	9	M8	25	42	M5
						43											49	
45	14	45	83	82	77	38	1,5	23	32,0	14,5	69,5	89,0	30	11	M10	49	45	M6
						49											56	
55 [2]	20	55	100	97	95	51	1,5	28	40,0	23,5	91,5	106,0	37	14	M12	120	60	M8
						68											78	

Technical data								
Size	Type	Torque of bellow T_{KN} [Nm] [1]	Speed n [rpm]	Torsion spring stiffness C_T [Nm/rad]	Axial spring stiffness [N/mm]	Radial spring stiffness [N/mm]	Perm. displacements		
							Axial [mm]	Radial [mm]	Angular [degrees]
30	S	35	8700	14800	97	233	±0,5	0,20	1,5
38	S	65	7350	24900	108	318	±0,6	0,20	1,5
42	S	95	6820	36500	120	499	±0,6	0,20	1,5
45	S	170	5750	64000	132	738	±0,9	0,25	1,5
55 [2]	S	340	4800	96100	160	894	±1,0	0,25	1,5

TOOLFLEX® Type M-CF Hub material aluminium (size 55 steel)/bellow stainless steel																		
Size	Finish bore		Dimensions [mm]									Clamping screw					Flange	
	min. d_1	max. d_1	D_H	D_B	D_F	d_2 H7	l_3	l_1	l_2	E	L	D_K	e_1	t_1	M	T_A	D_T	M_1
30	10	30	55	50	47	25	1,5	16	23,0	19,5	58,5	58,0	19	7	M6	10	30	M4
						29											34	
38	12	38	65	60,5	55,75	29	1,5	18	25,5	23,0	66,5	72,6	25	9	M8	25	35	M5
						36											42	
42	14	42	70	66	62,95	36	1,5	21	30,0	26,0	77,0	76,1	27	9	M8	25	42	M5
						43											49	
45	14	45	83	82	77	38	1,5	23	32,0	31,0	86,0	89,0	30	11	M10	49	45	M6
						49											56	
55 [2]	20	55	100	97	95	51	1,5	28	40,0	37,0	105,0	106,0	37	14	M12	120	60	M8
						68											78	

Technical data								
Size	Type	Torque of bellow T_{KN} [Nm] [1]	Speed n [rpm]	Torsion spring stiffness C_T [Nm/rad]	Axial spring stiffness [N/mm]	Radial spring stiffness [N/mm]	Perm. displacements		
							Axial [mm]	Radial [mm]	Angular [degrees]
30	M	35	8700	14800	65	155	±0,8	0,25	2,0
38	M	65	7350	24900	72	212	±0,8	0,25	2,0
42	M	95	6820	36500	80	333	±0,8	0,25	2,0
45	M	170	5750	64000	88	492	±1,0	0,30	2,0
55 [2]	M	340	4800	96100	107	598	±1,0	0,30	2,0

[1] For selection see page 18 et seqq.
[2] Hub made of steel welded to bellow

Review of shaft-hub-connection: Friction torques for hub type 2.5																					
Size	Ø10	Ø11	Ø12	Ø14	Ø15	Ø16	Ø18	Ø19	Ø20	Ø24	Ø25	Ø28	Ø30	Ø32	Ø35	Ø38	Ø40	Ø42	Ø45	Ø50	Ø55
30		33,1	33,8	35,1	35,8	36,5	37,8	38,5	39,2	41,9	42,5	44,6	45,9								
38							84,2	85,4	86,6	91,6	92,8	96,5	99,0	102	105	109					
42				84,2	85,4	86,6	89,1	90,3	91,6	96,5	97,8	102	104	106	110	114	116	119			
45									157	165	167	173	177	181	187	193	197	200	206		
55 [4]										397	401	413	421	429	442	454	462	470	482	502	523

Ordering-example:	TOOLFLEX® 38 M-CF	Ø15	Ø29 - Ø35 - 6xM5
	Size and type of coupling	Finish bore	Dimensions of flange (d_2 - D_T - M_1)

TOOLFLEX® S-CF

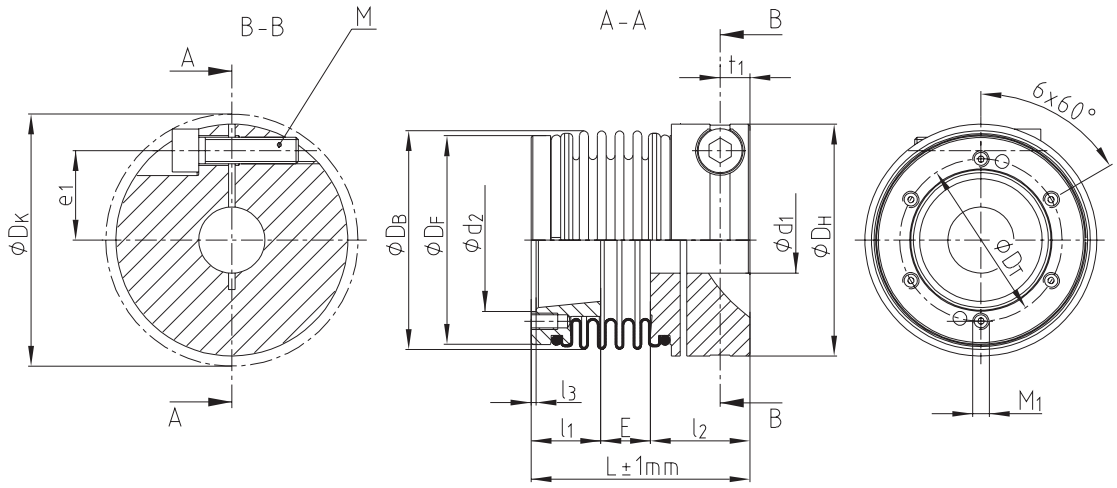

TOOLFLEX® M-CF

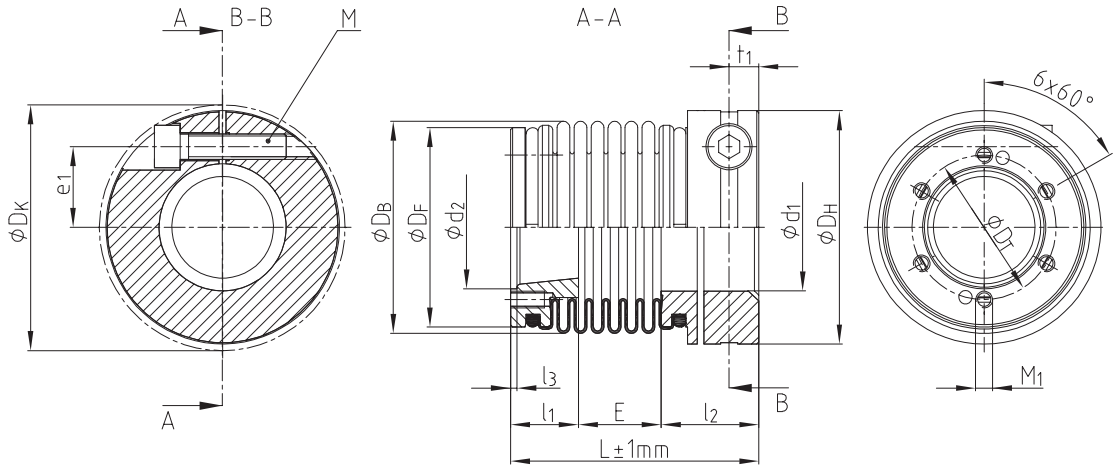

TOOLFLEX® S-H / M-H
Metal bellow-type couplings

Shell clamping hubs

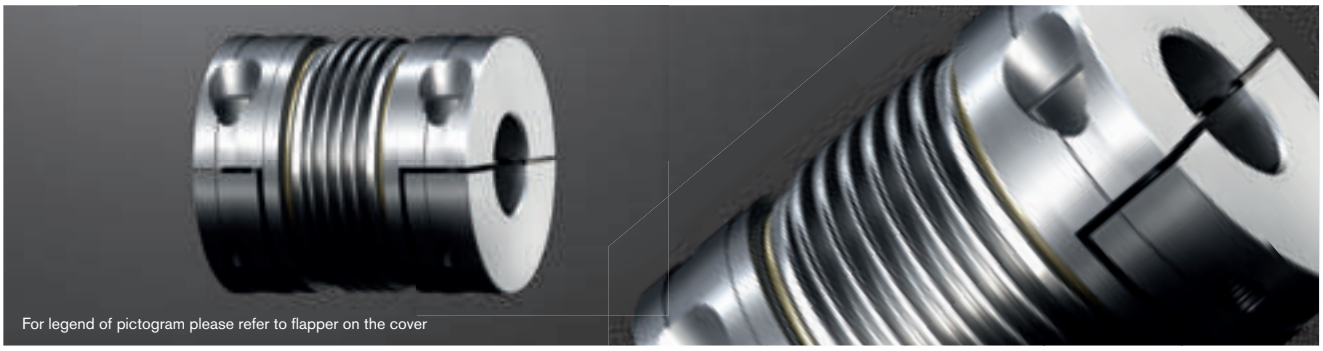

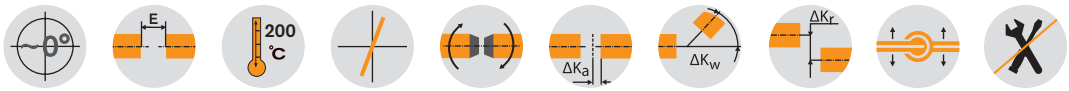

TOOLFLEX® type S-H / shell clamping hubs Hub material aluminium/bellow material stainless steel

Size	Finish bore		Dimensions [mm]											
			General								Cap screws DIN 912			
	$d_{min.}$	$d_{max.}$	L	l_1; l_2	E	D_H	D_K	E_1	t_1	x_1/x_2	e	Mxl	T_A [Nm]
20	8	20	51	19,5	12,0	40	41,2	26,0	5,5	12,5	14,5	M4x16	5,0
30	10	28	68	25,5	17,0	55	57,7	34,0	7,5	17,0	19,0	M6x25	15,0
38	12	38	78	30,0	18,0	65	72,6	36,0	9,5	21,0	25,0	M8x30	40,0
45	14	45	94,5	36,0	22,5	83	88,8	46,5	11,0	24,0	30,0	M10x35	70,0

Technical data of TOOLFLEX® S-H

Size	Bellow-hub-connection	Torque of bellow T_{KN} [Nm] [1]	Max. speed n [rpm]	Moment of inertia [2] [x10^{-6}kgm^2]	Torsion spring stiffness C_T [Nm/rad]	Axial spring stiffness [N/mm]	Radial spring stiffness [N/mm]	Perm. displacements			Weight [4] [kg]
								Axial [mm]	Radial [mm]	Angular [degrees]	
20	Flanged	15	9550	28	9600	63	189	±0,4	0,15	1,0	0,110
30		35	6950	20	17800	97	233	±0,5	0,20	1,5	0,285
38		65	5850	42	37400	108	318	±0,6	0,20	1,5	0,422
45		170	4750	1003	95800	132	738	±0,9	0,20	1,5	0,897

TOOLFLEX® type M-H / shell clamping hubs Hub material aluminium/bellow material stainless steel

Size	Finish bore		Dimensions [mm]										
			General								Cap screws DIN 912		
	$d_{min.}$	dmax.	L	l_1; l_2	E	D_H	D_K	E_1	t_1	x_1/x_2	e	Mxl	T_A [Nm]
20	8	20	58	19,5	19,0	40	41,2	33,0	5,5	12,5	14,5	M4x16	5,0
30	10	28	77	25,5	26,0	55	57,7	43,0	7,5	17,0	19,0	M6x25	15,0
38	12	38	90	30,0	30,0	65	72,6	48,0	9,5	21,0	25,0	M8x30	40,0
45	14	45	111	36,0	39,0	83	88,8	63,0	11,0	24,0	30,0	M10x35	70,0

Technical data of TOOLFLEX® M-H

Size	Bellow-hub-connection	Torque of bellow T_{KN} [Nm] [1]	Max. speed n [rpm]	Moment of inertia [2] [x10^{-6}kgm^2]	Torsion spring stiffness CT [Nm/rad]	Axial spring stiffness [N/mm]	Radial spring stiffness [N/mm]	Perm. displacements			Weight [4] [kg]
								Axial [mm]	Radial [mm]	Angular [degrees]	
20	Flanged	15	9550	29	9600	63	189	±0,4	0,15	1,0	0,115
30		35	6950	138	17800	97	233	±0,5	0,20	1,5	0,304
38		65	5850	310	37400	108	318	±0,6	0,20	1,5	0,445
45		170	4750	1069	95800	132	738	±0,9	0,25	1,5	0,947

[1] For selection see page 18 et seqq.
[2] Details referring to the overall coupling with max. bore
To make sure that the coupling can be assembled/disassembled radially, please observe the insertion dimension x1/x2 of the shafts.

Review of shaft-hub-connection: Friction torques for hub type 2.5 for Ød1/Ød2

Size	Ø8	Ø9	Ø10	Ø11	Ø12	Ø14	Ø15	Ø16	Ø18	Ø19	Ø20	Ø24	Ø25	Ø28	Ø30	Ø32	Ø35	Ø38	Ø40	Ø42	Ø45
20	12,5	14,1	15,7	17,2	18,8	21,9	23,5	25,1	28,2	29,8	31,3										
30			31,8	35,0	38,2	44,5	47,7	50,9	57,3	60,4	63,6	76,3	79,5	89,1							
38					74,9	87,4	93,7	99,9	112,4	118,6	124,9	149,9	156,1	174,8	187,3	199,8	218,5	237,3			
45						123,4	132,2	141,0	158,6	167,4	176,2	211,5	220,3	246,7	264,4	282,0	308,4	334,9	352,5	370,1	396,5

Ordering example:

TOOLFLEX® 30 S-H	7.8	d_1 - Ø25	7.9	d_2 - Ø30
Size and type of coupling	Hub type	Finish bore	Hub type	Finish bore

TOOLFLEX® S-H

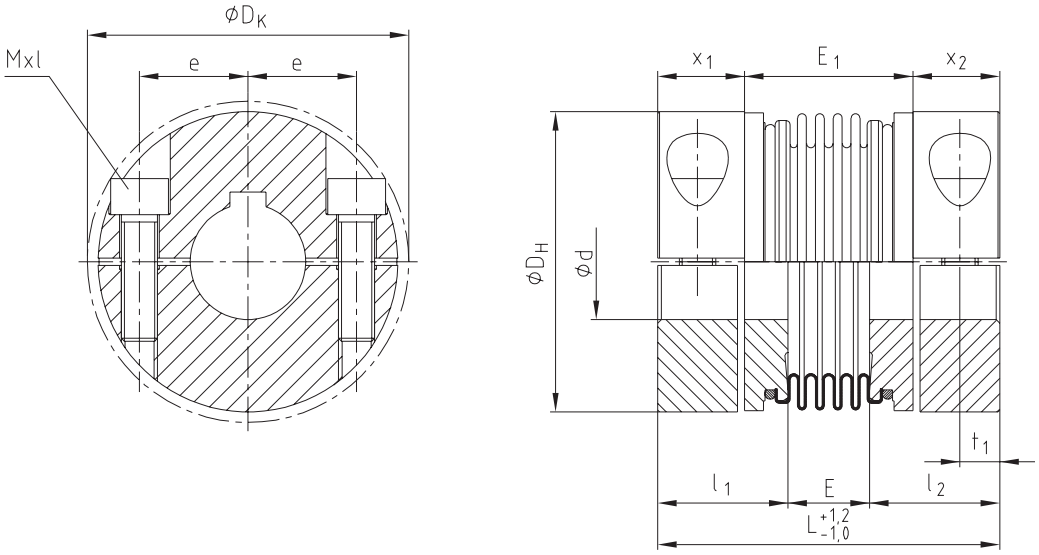

TOOLFLEX® M-H

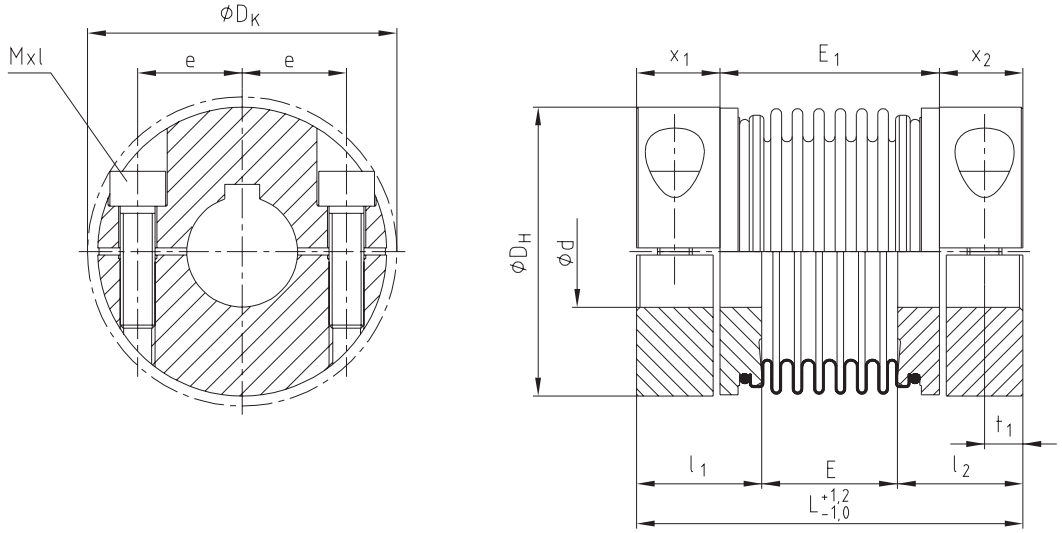

Hub types

Type 7.8



Clamping hub type H without feather keyway
for single-cardanic connection

Type 7.9



Clamping hub type H with feather keyway
for single-cardanic connection (on request)

TOOLFLEX® ZR
Metal bellow-type couplings

Material of intermediate pipe aluminium



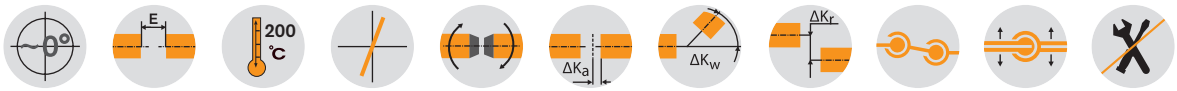

TOOLFLEX® type ZR / shell clamping hubs Hub material aluminium/bellow material stainless steel																
Size	Finish bore		Dimensions [mm]													
			General												Cap screws DIN 912	
	$d_{min.}$	$d_{max.}$	D_H	L	l_3	L_R		$L_{ZR}=L_R+2 \bullet l_3$		d_R	D_K	t_1	e	M	T_A [Nm]
						min.	max.	min.	max.						
20	8	20	40	40	12,5	80	2975	105	3000	40	41,2	5,5	14,5	M4	5
30	10	28	55	58,5	17,0	114	3466	148	3500	50	58,0	7,5	19	M6	15
38	12	38	65	61	21,0	129	3958	171	4000	60	72,6	9,5	25	M8	40
45	14	45	83	78,5	25,0	149	3950	199	4000	80	89,0	11,0	30	M10	70

Technical data of TOOLFLEX® ZR				
Size	Torque of bellow T_{KN} [Nm] [1]	Moment of inertia [10^{-3} kgm²]		Static torsion spring stiffness [Nm²/rad]
		Z_R-hub [2]	Pipe/meter	$Z_W C_2$ [3]
20	15	0,024378	0,329	1935
30	35	0,121256	0,673	3800
38	65	0,253162	1,199	7240
45	170	0,961451	4,560	23183

[1] For selection see page 18 et seqq.
[2] With dmax.
[3] Torsion spring stiffness with a length of 1 m of intermediate pipe with $L_{pipe} = L_{ZR} - 2 \cdot L$
With inquiries and orders please specify the shaft distance dimension L_R along with the maximum speed to rewiew the critical bending speed.
Straightness / concentricity of pipes according to DIN EN 755-1

Review of shaft-hub-connection: Friction torques for hub type 2.5 for Ød1/Ød2																					
Size	Ø8	Ø9	Ø10	Ø11	Ø12	Ø14	Ø15	Ø16	Ø18	Ø19	Ø20	Ø24	Ø25	Ø28	Ø30	Ø32	Ø35	Ø38	Ø40	Ø42	Ø45
20	12,5	14,1	15,7	17,2	18,8	21,9	23,5	25,1	28,2	29,8	31,3										
30			31,8	35,0	38,2	44,5	47,7	50,9	57,3	60,4	63,6	76,3	79,5	89,1							
38					74,9	87,4	93,7	99,9	112,4	118,6	124,9	149,9	156,1	174,8	187,3	199,8	218,5	237,3			
45						123,4	132,2	141,0	158,6	167,4	176,2	211,5	220,3	246,7	264,4	282,0	308,4	334,9	352,5	370,1	396,5

Ordering example:	TOOLFLEX® 30	ZR	1200 mm	7.5 - Ø24		7.6 - Ø24	
	Size and type of coupling	Type	Shaft distance dimension (L_R)	Hub type	Finish bore	Hub type	Finish bore

TOOLFLEX® ZR

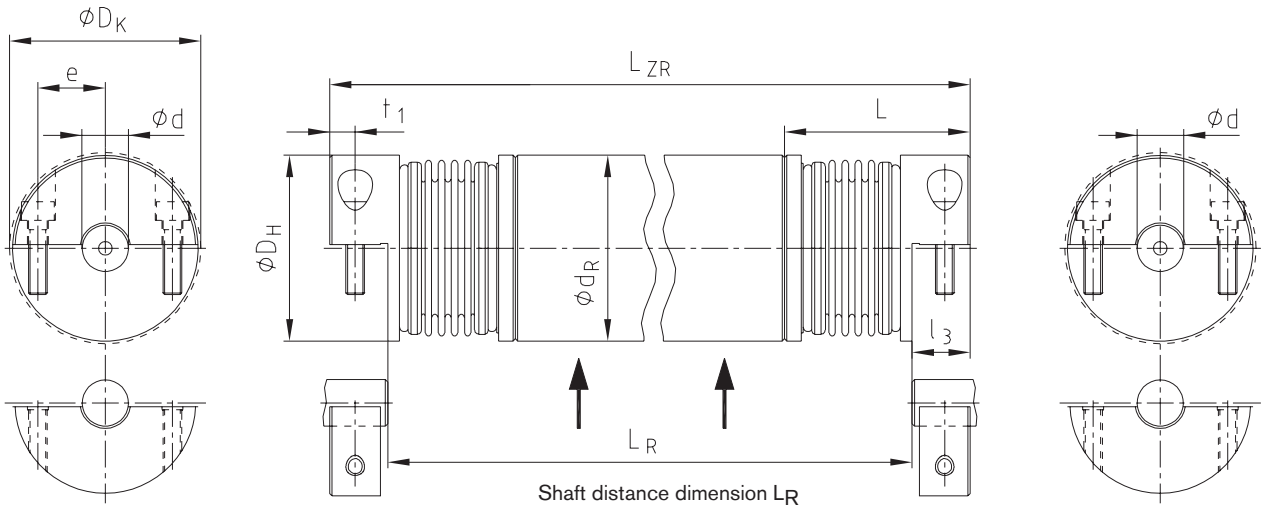

Shaft distance dimension L_R

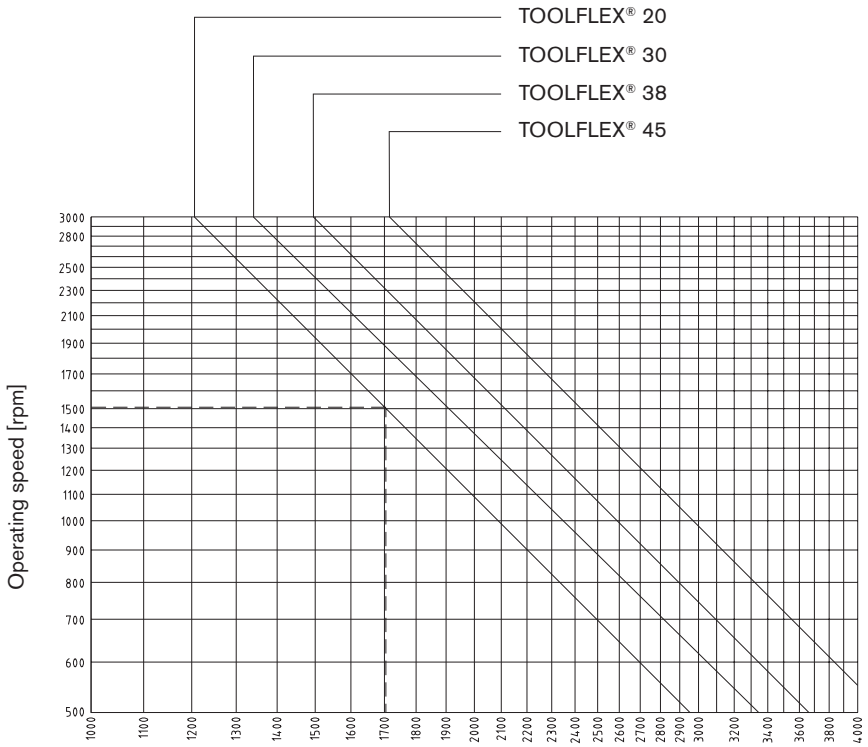

Shaft distance dimension L_R [mm]

Hub types

Type 7.5



Clamping hub type DH without feather keyway
for double-cardanic connection

Type 7.6



Clamping hub type DH with feather keyway
for double-cardanic connection (on request)

RADEX®-NC
Servo lamina couplings

Technical description

RADEX®-NC is a line specifically developed for servo technology. In this coupling a set of torsionally rigid steel laminas that are soft in bending ensures a reliable compensation for axial, angular and radial shaft displacements. As an all-metal coupling - the laminas are made of stainless steel - RADEX®-NC can even be used with high temperatures (up to 200 °C) and under aggressive ambient conditions. The RADEX®-NC is manufactured in 7 sizes from size 5 to 42 for max. torques of up to 360 Nm. The hubs are designed as frictionally engaged clamping hubs made of aluminium (size 42 made of steel) and are thus backlash-free even in a reversing drive.



A typical application of the RADEX®-NC are backlash-free worm gear pairs with low transmissions. The rigidity of the coupling must be converted by reason of the transmission of the gearbox from the drive side to the driven side. Here the transmission itself has a decisive influence because it is squarely included in the calculation. This converted rigidity is added in line to the gearbox stiffness in order to get the total rigidity. In case of transmissions that are smaller than i = 8 we recommend to use the RADEX®-NC due to the loss of rigidity of the total system arising if flexible couplings are used.

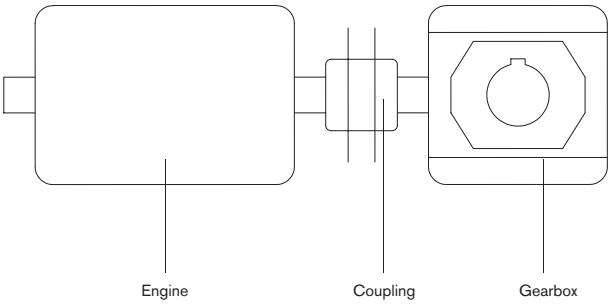

Use in explosive applications

RADEX®-NC couplings are suitable for power transmission in drives in hazardous areas. The couplings are certified and confirmed according to EC standard 94/9/EC (ATEX 95) as units of category 2G/2D and thus suitable for the use in hazardous areas of zone 1, 2, 21 and 22. Please read through our information included in the respective Type Examination Certificate and the operating and mounting instructions at www.ktr.com.
Selection:
If used in hazardous areas the clamping ring hubs (clamping hubs without feather keyway only for use in category 3 (with feather keyway for cat. 2) must be selected such that there is a minimum safety factor of s = 2 between the peak torque (including all operating parameters) and the nominal torque and frictional torque of engagement of the coupling.

Hub types



Type 2.5 Clamping hub double slot, without feather keyway

Frictionally engaged, backlash-free shaft-hub-connection. Transmittable torques depending on bore diameter



Type 2.6 Clamping hub double slot, with feather keyway

Positive locking power transmission with additional frictionally engaged condition. The frictionally engaged condition prevents or reduces reverse backlash, respectively. Surface pressure of the keyway connection is reduced.

RADEX®-NC DK and EK
Servo lamina couplings

Double- and single-cardanic types





Type DK

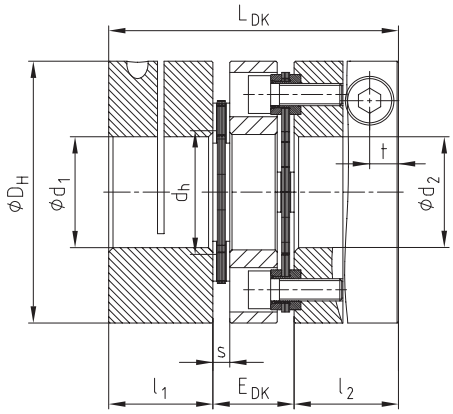

Type EK

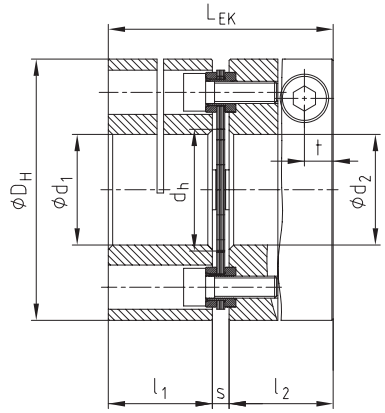

RADEX®-NC Types DK and EK Hub and spacer material aluminium (size 42 steel)/laminas stainless steel													
Size	Dimensions [mm]									Clamping screw		Mass moments of inertia	
	max. d_1/d_2	D_H	$l_1;l_2$	L_{DK}	E_{DK}	L_{EK}	d_h	s	t	M	T_A [Nm]	DK [kgm²]	EK [kgm²]
5	12	26	12	34	10	26,5	12	2,5	3,5	M2,5	0,8	0,000004	0,000003
10	15	35	16	44	12	35	14,5	3	5,0	M4	3	0,000016	0,000012
15	20	47	21	55	13	45	19,5	3	6,8	M6	10	0,000065	0,000053
20	25	59	24	67	19	52	24	4	6,5	M6	10	0,000199	0,000154
25	35	70	32	88	24	69	30	5	9,0	M8	25	0,000508	0,000393
35	42	84	35	98	28	77	38	7	10,5	M10	49	0,001153	0,000911
42	55	104	40	116	36	91	48	11	10,5	M10	69	0,007458	0,006153

Technical data												
Size	T_{KN} [1] [Nm]	$T_{K\,max}$ [1] [Nm]	Max. speed [rpm]	Torsion spring stiffness [Nm/rad]		Displacement type DK			Displacement type EK		
				Type EK	Type DK	Radial [mm]	Axial [mm]	Angular [°]	Radial [mm]	Axial [mm]	Angular [°]
5	2,5	5	25000	2400	1200	0,10	0,4	1	—	0,2	1
10	7,5	15	20000	5600	2800	0,14	0,8	1	—	0,4	1
15	20	40	16000	12000	6000	0,16	1,0	1	—	0,5	1
20	30	60	12000	30000	15000	0,25	1,2	1	—	0,6	1
25	60	120	10000	60000	30000	0,30	1,6	1	—	0,8	1
35	100	200	9000	72000	36000	0,40	2,0	1	—	1,0	1
42	300	600	7000	240000	120000	0,50	2,8	1	—	1,4	1

[1] See page 18 et seqq.

Review of shaft-hub-connection: Friction torques for hub type 2.5																						
Size	Pilot bored	Ø3	Ø5	Ø8	Ø10	Ø12	Ø14	Ø15	Ø16	Ø19	Ø20	Ø24	Ø25	Ø28	Ø30	Ø32	Ø35	Ø38	Ø40	Ø45	Ø50	Ø55
5	2,5	2,2	2,3	2,4	2,5																	
10	4,5		8	9	10	10	11	11														
15	5,5				28	30	31	32	32	34	35											
20	7,5					36	37	38	39	40	41	44	45									
25	9,5							82	83	87	88	93	94	98	100	103	106					
35	11,5									155	157	165	167	173	177	181	187	193	197			
42	15,0											285	287	296	301	307	315	323	329	343	357	370

Ordering-example:

RADEX®-NC 20	DK	2.5	Ø20	2.5	Ø25
Coupling size	Type	Hub type	Finish bore	Hub type	Finish bore

Double-cardanic for measuring drives





COUNTEX® Hub material aluminium/spacer PEEK														
Size	Torque [Nm]		Dimensions [mm]						Displacements			Torsion spring stiffness C_T [Nm/rad]	Radial stiffness C_R [N/mm]	Axial restoring force C_A [N]
	T_{KN}	$T_{Kmax.}$	min. d	max. d	D	l_1/l_2	E	L	radial ΔK_r [mm]	axial ΔK_a [mm]	angular ΔK_w [°]			
6	0,3	0,6	2	6	15	4	4	12	0,05	-0,3/+0,6	0,36	48	26	10
12	0,5	1,0	2	12	22	6	3,5	15,5	0,10	-0,5/+1,0	0,45	120	65	25
14	1,0	2,0	5	14	31	8	4	20	0,12	-0,5/+1,0	0,57	235	70	27

General description

COUNTEX® is a three-part, backlash-free and torsionally stiff coupling specifically developed for the demands in measuring and control technology.

Its axial plug-in ability combined with the geometry of hubs results in a coupling system with a specifically easy assembly offering options of mounting fitting with processing. The material of the spacer is resistant to high temperatures ensuring almost continuous properties of the coupling system even with temperatures up to 160 °C.

Applications

The measuring and control technology demands for a high torsion spring stiffness of the coupling in order to realize reproduceable positioning. At the same time the coupling has to compensate for displacements without the large forces causing stresses for the adjacent filigree components.

With its spacer made of highly temperature-resistant nylon our COUNTEX® ensures an almost constant torsion spring stiffness even with high temperatures. The double-cardanic principle of COUNTEX® reduces the restoring forces to a minimum. Nevertheless it has very compact dimensions which make it excellently suitable for tight mounting spaces.

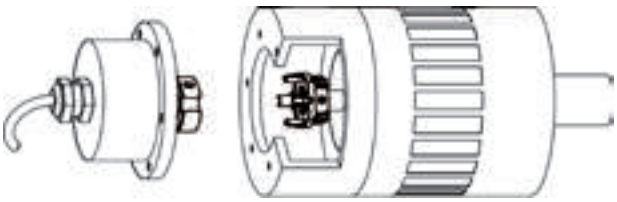

Use in explosive applications

COUNTEX® couplings are suitable for positioning transmission in drives used in explosive areas. The couplings are certified and confirmed according to EC standard 94/9/EC (ATEX 95) as units of category 2G/2D and thus suitable for the use in hazardous areas of zone 1, 2, 21 and 22. Please read through our information included in the respective Type Examination Certificate and the operating and mounting instructions at www.ktr.com.

Ordering-example:	COUNTEX® 14	1.1	Ø6,35	1.1	Ø10
	Coupling size	Hub type	Finish bore Ød1	Hub type	Finish bore Ød$_2$

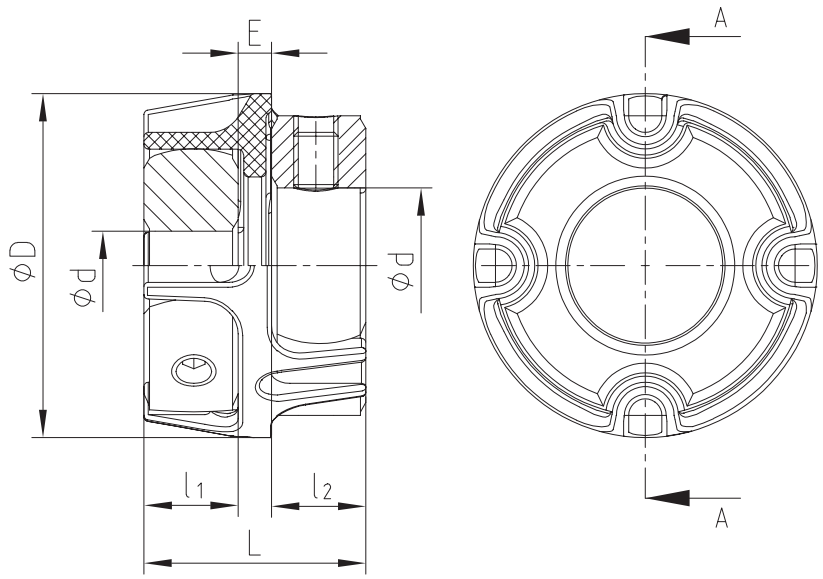

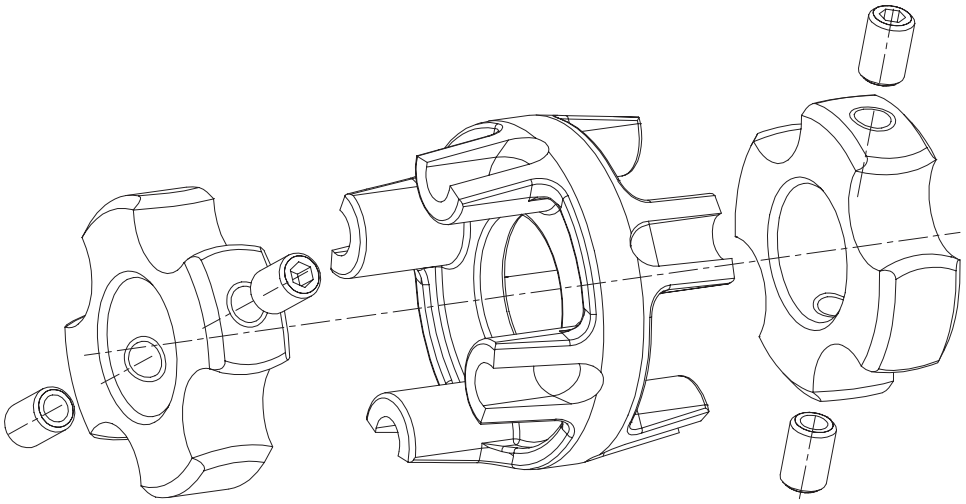

Hub types

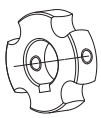

Type 1.0 with keyway and set screw

Positive locking power transmission. Perm. torque depending on the permissible surface pressure. Not suitable for backlash-free power transmission with heavily reversing operation.

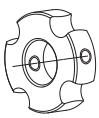

Type 1.1
without keyway, with setscrew

Non-positive torque transmission, suitable for backlash-free transmission of very small torques.
Standard

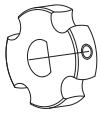

Type 1.3
with spline bore

Positive locking power transmission. Spline on request of customers (e. g. sfor shaft with flattening)

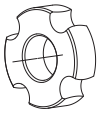

Type 1.2 Hub
without feather keyway without setscrew

For low torques. Suitable for bonding or pressing onto the shaft.



Steel lamina couplings

Types and operating description	168
RADEX®-N	
General information and types of hubs	170
Types and applications	171
Technical data	172
Standard types	174
Customized types	176
Corrosion-resistant type for large shaft distances	177
Standard series NANA 3 for pump drives in accordance with API 610	178
RIGIFLEX®-N	
Technical data	180
Type A	182
RIGIFLEX®-HP	
Type C	183
Type L	184
Technical data	185

RADEX®-N



RIGIFLEX®-N



RIGIFLEX®-HP



STEEL LAMINA COUPLINGS
TYPES AND OPERATING DESCRIPTION

Properties of lamina couplings

			
Product	**RADEX®-N**	**RIGIFLEX®-N**	**RIGIFLEX®-HP**
Type	Steel lamina coupling		High-performance steel lamina coupling
Properties			
Torsionally rigid	●	●	●
Backlash-free	●	●	●
Maintenance-free	●	●	●
Compensating for misalignment	●	●	●
Special features			
Stock programme	Basic programme available from stock, customized solutions available	Basic programme available from stock, customized solutions available	For customized solutions, applications in high performance ranges and on high-speed drives
Applications/core industries	Pumps, compressors, fans	Pumps, compressors, fans	Pumps, turbo compressors, turbines
API	610	610 & 671	610 & 671
Performance data			
Max. rated torque TKN [Nm]	280.000	280.000	330.000
Max. speed n [rpm]	20.000	23.000	17.300
Max. operating temperature T [°C]	280	280	280
Standard materials			
Hubs			
Steel (S355J2G3)	●	●	
Q & T steel (C45N)	●	●	
Q & T steel (42CrMo4V)			●
Q & T steel (30CrNiMo8)			●
Spacers			
Steel (S355J2G3)	●	●	
Q & T steel (C45N)	●	●	
Q & T steel (42CrMo4V)	with torsion shafts		●
Q & T steel (30CrNiMo8)	with torsion shafts		●
Special materials (corrosion-resistant)			
Hubs			
Steel (1.4305)	●	○	○
Steel (1.4404)	●		
Spacers			
Steeel (1.4305)	●	○	○
Steel (1.4404)	●		
Spacer made of Composite GFK (fibre glass)	●		
Spacer made of Composite CFK (carbon fibre)	●		
Surface coating	Painting, phosphating, zinc-plating and passivating, Geomet, Tenifer Q	Painting, phosphating, zinc-plating and passivating, Geomet, Tenifer Q	Painting, phosphating, zinc-plating and passivating, Geomet, Tenifer Q

● ≈ Standard
○ ≈ on request

STEEL LAMINA COUPLINGS
TYPES AND OPERATING DESCRIPTION

Product finder of lamina couplings

			
Product	**RADEX®-N**	**RIGIFLEX®-N**	**RIGIFLEX®-HP**
Type	Steel lamina coupling		High-performance steel lamina coupling
Geometries			
Design	Single- and double-cardanic	Double-cardanic	Double-cardanic
Max. shaft diameter [mm]	330	400	380
Radial assembly	●	●	●
Certifications/type examinations			
ATEX	●	●	●
GOST R/ GOST TR	●	●	●
DNV GL	●	●	●

● ≈ Standard

Details on lamina couplings

Laminas - FEM-optimized lamina shape

The steel lamina sets made of highly siff, stainless spring steel based on FEM calculations. Considering the necessary options of displacement of the coupling, the optimum shape with regard to torque transmission and torsional stiffness was aimed at. The waisted shape of the steel laminas on the outside diameter resulted from this optimization calculation.



RADEX®-N - Lamina sets with dowel screws

The heart of the steel lamina coupling are the lamina sets and their connection to hubs and spacers. High-strength, special dowel screws that are alternately screwed to hubs and spacer enable a combination of frictional engagement and positive locking. Thus a high power density with at the same time ease of displacement and low restoring forces is ensured.

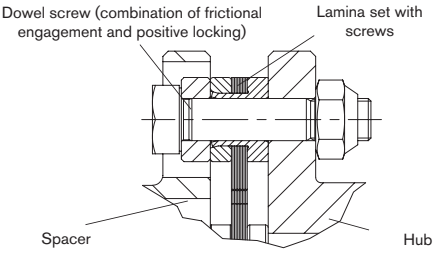

RIGIFLEX®-N - Protecting the spacer

Since our main idea with the development of RIGIFLEX®-N was to comply with the standards of API 610 and API 671, the spacer is secured by a safety catch, too. In case that the laminas break the spacer remains within the coupling.
In general the removable part is supplied along with a lamina set preassembled by the manufacturer. These are connected with the spacers or flanges absolutely backlash-free via positive-locking special pins.

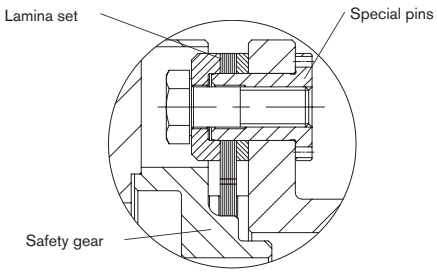

RADEX®-N
Steel lamina couplings

General information

Assembly and operating advice

(See our mounting instructions KTR standard 47110 at www.ktr.com.). With the assembly it is important to make sure that the lamina sets are assembled free from distortion in axial direction. If the finish bore is machined by the customer, the concentric and axial running tolerances have to be adhered to (see sketch).

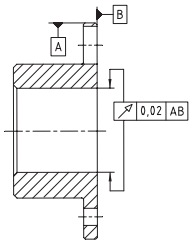

Installation:

RADEX®-N couplings are designed for horizontal installation. For vertical installation the spacer might have to be supported (see sketch). Please consult with us.

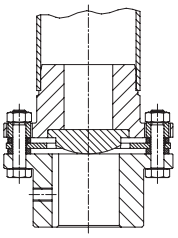

Delivery condition

RADEX®-N couplings are delivered as individual parts (can be delivered assembled on request). The hubs can be supplied unbored or with finish bore and feather keyway or with a frictionally engaged shaft-hub-connection. The shaft-hub-connection needs to be inspected by the customer (consult with KTR, if necessary).



Balancing:

On request of the customer the RADEX®-N couplings can be balanced. For usual applications this is not necessary due to the accurate machining of the coupling. Please consult with us, if necessary.

Safety regulations:

The coupling has to be dimensioned in a way that the permissible coupling load is not exceeded during any operating condition. For this purpose the actual loads have to be compared to the permissible parameters of the coupling. The customer has to protect rotating parts from accidental contact (Safety of Machines DIN EN 292 part 2). Please take precautions that there is a sufficient coupling protection in case of fracture of the coupling caused by overload.

Hub designs



Type 1.0 Hub
with feather keyway and setscrew´

Positive locking power transmission, permissible torque depending on the permissible surface pressure. Not suitable for backlash-free power transmission with heavily reversing operation.

Type 1.1 Hub
without feather keyway with setscrew

Non-positive torque transmission for crimped and bonded connections (no ATEX release)

Type 1.2 Hub
without feather keyway without setscrew

Non-positive torque transmission for crimped and bonded connections (no ATEX release)



Type 6.0 Clamping ring hub

Integrated frictionally engaged shaft-hub-connection for the transmission of higher torques. Clamping screws on lamina side. Transmittable torques depending on bore diameter Suitable for high speeds.

Type 6.5 Clamping ring hub

Integrated frictionally engaged shaft-hub-connection for the transmission of higher torques. Clamping screws outside. Transmittable torques depending on bore diameter Suitable for high speeds.



Type 2.5 Clamping hub double slot, without feather keyway

Frictionally engaged, backlash-free shaft-hub-connection-. Transmittable torques depending on bore diameter (For ATEX category 3 only)

Type 2.6 Clamping hub double slot, with feather keyway

Positive shaft-hub connection with additional frictional engagement. The frictionally engaged condition prevents or reduces reverse backlash, respectively.

Types and applications

	Properties	Applications
Type NN (see page 174) 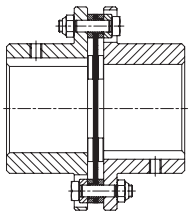	● Single-cardanic design ● Only angular and axial displacement permissible ● High torsional rigidity ● Compact dimensions	● Mixers ● Agitators ● Immersion pumps ● Fans ● Applications with high radial load
Type NANA 1/NANA 2 (see page 174) 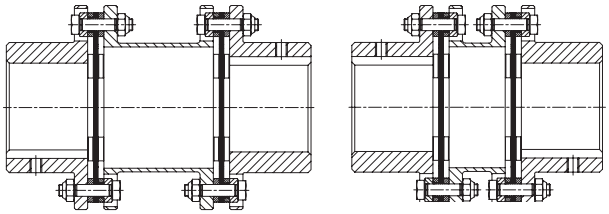	● Double-cardanic design ● Compensating for high misalignment with low restoring forces ● Standard spacers available from stock	● Paper machines ● Printing and processing machines ● Material Handling ● Steel mills ● Generators ● Grinding machines
Type NANA 3 (see page 178) 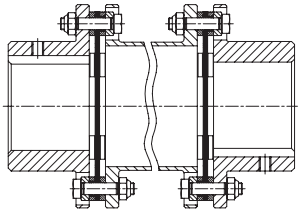	● Double-cardanic design ● Spacers adapted to standard dimensions of pumps ● Radial assembly, no shifting of the machine required ● Available according to API 610	● Process pumps ● Water pumps ● Pumps according to API standard ● Turbines ● Compressors
Type NANA 4 (see page 176) 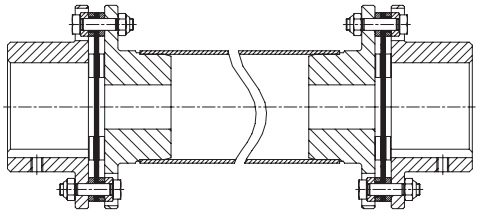	● Spacers can be determined by the customer ● Max. shaft distance dimension up to approx. 6 m ● Welded intermediate pipes for high torsional rigidity	● Foil and paper machines ● Pallet and conveyor systems ● Robotic palletizers ● Test benches ● Cooling towers/blowers
Type NNW (see page 176) 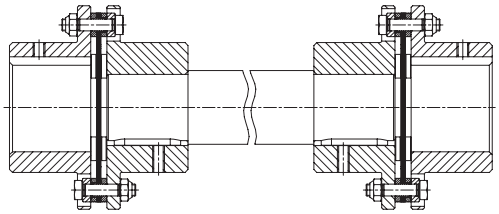	● Spacers can be determined by the customer ● Coupling consisting of 2 times type NN with intermediate shaft ● For drives with relatively low speeds	● Low speed drives with big shaft distance dimensions ● Agitators ● Crushers ● Presses ● Packaging machines
Type NNZ (see page 175) 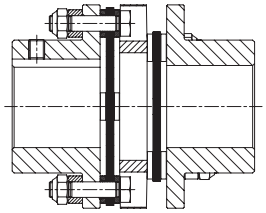	● Compact double-cardanic coupling ● Cannot be radially assembled ● With intermediate disk ● Ideal for replacement of curved-tooth gear couplings from steel ● Standard type up to size 70	● Robotics ● Paper machines and inserters ● Machine tools ● Packaging machines ● Test benches
Type NENE 1 (see page 175) 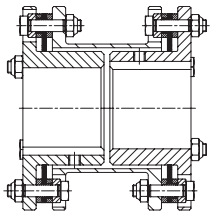	● With reduced hubs ● Compact double-cardanic design ● Spacer cannot be radially assembled ● Variable spacer length	● Applications with short shaft distance dimensions ● Replacement for curved-tooth gear couplings from steel

Technical data

The following lamina types are to be distinguished with RADEX®-N

Size 20 – 50
(lamina with 4 holes)

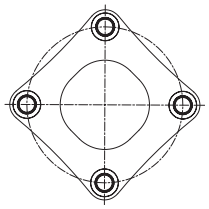

Size 60 – 135
(lamina with 6 holes)

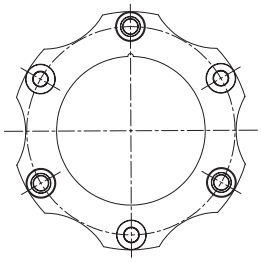

Size 136 – 336
(lamina with 6 holes)

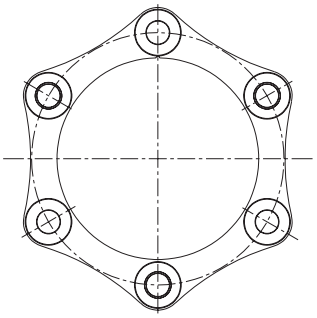

Size 138 – 338
(lamina with 8 holes)

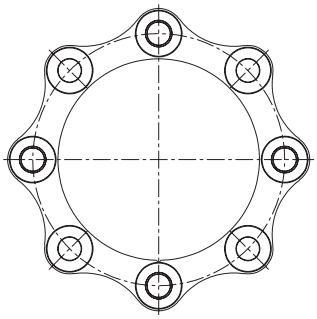

Torques and displacements

Size	Lamina type	Torques [Nm] [1]			Perm. displacements [2]				
		T_{KN}	$T_{K\ max}$	T_{KW}	Angle [°] each lamina	Axial [mm]		Radial [mm]	
						NN	NANA 1/ NANA2/ NNZ	NANA 1	NANA 2/NNZ
20		15	30	5	1,0	0,60	1,2	1,0	0,2
25		30	60	10	1,0	0,80	1,6	1,0	0,2
35	lamina with 4 holes	60	120	20	1,0	1,00	2,0	1,1	0,3
38		120	240	40	1,0	1,20	2,4	1,2	0,3
42		180	360	60	1,0	1,40	2,8	1,2	0,4
50		330	660	110	1,0	1,60	3,2	1,5	0,4
60		690	1380	230	1,0	1,00	2,0	1,5	0,8
70		1100	2200	370	1,0	1,10	2,2	1,8	1,0
80		1500	3000	500	1,0	1,30	2,6	2,1	1,2
85		2400	4800	800	1,0	1,30	2,6	2,2	1,2
90		4500	9000	1500	1,0	1,00	2,0	2,2	1,1
105		5100	10200	1700	1,0	1,20	2,4	2,4	1,4
115		9000	18000	3000	1,0	1,40	2,8	2,5	1,5
135	lamina with 6 holes	12000	24000	4000	1,0	1,75	3,5	3,8	–
136		17500	35000	8750	0,7	1,85	3,7		
156		25000	50000	12500	0,7	2,10	4,2		
166		35000	70000	17500	0,7	2,25	4,5		
186		42000	84000	21000	0,7	2,40	4,8		
206		52500	105000	26250	0,7	2,60	5,2		
246		90000	180000	45000	0,7	3,00	6,0		
286		150000	300000	75000	0,7	3,35	6,7		
336		210000	420000	105000	0,7	3,75	7,5	Depending on	
138		23000	46000	11500	0,5	1,30	2,6	distance dimension E	
158		33000	66000	16500	0,5	1,40	2,8		
168		45000	90000	22500	0,5	1,50	3,0		
188	lamina with 8 holes	56000	112000	28000	0,5	1,60	3,2		
208		70000	140000	35000	0,5	1,75	3,5		
248		120000	240000	60000	0,5	2,00	4,0		
288		200000	400000	100000	0,5	2,40	4,5		
338		280000	560000	140000	0,5	2,50	5,0		

Permissible speeds and torsional stiffness figures

Size	Max. speed [rpm] (higher speeds on request)	Torsion spring stiffness x 10^6 [Nm/rad] per lamina set	Size	Max. speed [rpm] (higher speeds on request)	Torsion spring stiffness x 10^6 [Nm/rad] per lamina set
20	20400	0,02	156	3500	17,00
25	16800	0,03	166	3300	19,00
35	13900	0,11	186	3000	25,00
38	12000	0,20	206	2800	31,00
42	11000	0,28	246	2300	55,00
50	9000	0,50	286	2000	79,00
60	8200	0,56	336	1800	125,00
70	7300	0,90	138	3800	20,00
80	6300	1,10	158	3500	26,00
85	5900	1,50	168	3300	30,00
90	5400	2,00	188	3000	39,00
105	5000	2,50	208	2800	49,00
115	4300	3,50	248	2300	83,00
135	3700	6,90	288	2000	125,00
136	3800	13,00	338	1800	200,00

[1] For selection of coupling see page 14 et seqq.
[2] The permissible displacement figures specified are maximum figures which must not arise at the same time. If radial, axial and angular displacements arise in parallel, the figures need to be reduced.

Technical data

Weights and mass moments of inertia						
Size	Hub [1] [kg] / [kgm²]	Lamina set [kg] / [kgm²]	NN [1] compl. [kg] / [kgm²]	NANA 1 [1] compl. [kg] / [kgm²]	NANA 2 [1] compl. [kg] / [kgm²]	NNZ [1] compl. [kg] / [kgm²]
20	0,13 / 0,000043	0,04 / 0,00002	0,3 / 0,00011	0,6 / 0,000204	–	0,4 / 0,000166
25	0,2 / 0,000116	0,08 / 0,00005	0,56 / 0,00028	0,9 / 0,000522	–	0,8 / 0,000414
35	0,6 / 0,00042	0,10 / 0,00010	1,2 / 0,00094	1,9 / 0,00158	–	1,6 / 0,00129
38	0,8 / 0,00073	0,20 / 0,00026	1,8 / 0,0017	2,8 / 0,00303	–	2,4 / 0,00247
42	1,1 / 0,00123	0,25 / 0,00040	2,4 / 0,0029	3,6 / 0,00482	–	3,1 / 0,00409
50	1,7 / 0,00291	0,46 / 0,0010	4,0 / 0,0068	6,2 / 0,0118	–	5,1 / 0,00932
60	1,9 / 0,00378	0,40 / 0,0012	4,2 / 0,0087	6,0 / 0,0141	5,8 / 0,0138	5,3 / 0,0120
70	2,8 / 0,00714	0,42 / 0,0016	6,0 / 0,016	8,6 / 0,0253	8,2 / 0,0242	7,5 / 0,0214
80	4,1 / 0,0134	0,72 / 0,0037	9,0 / 0,031	12,6 / 0,0476	12,0 / 0,0458	11,1 / 0,0410
85	5,1 / 0,0195	1,0 / 0,0065	11,2 / 0,046	16,2 / 0,0734	15,5 / 0,0711	14,8 / 0,0650
90	6,2 / 0,0282	2,3 / 0,0162	14,7 / 0,073	22,0 / 0,121	21,3 / 0,119	20,1 / 0,108
105	7,6 / 0,0414	2,2 / 0,0180	17,4 / 0,101	25,8 / 0,165	24,6 / 0,159	23,1 / 0,145
115	12,0 / 0,0899	4,0 / 0,0433	27,9 / 0,223	42,8 / 0,381	41,2 / 0,372	38,3 / 0,333
135	19,0 / 0,187	7,3 / 0,105	45,1 / 0,478	71,3 / 0,835	–	–
136	16,8 / 0,153	7,9 / 0,113	41,4 / 0,419			–
156	20,2 / 0,217	11,9 / 0,200	52,2 / 0,634			–
166	30,0 / 0,373	12,3 / 0,255	72,3 / 1,001			–
186	42,0 / 0,629	12,7 / 0,318	96,7/ 1,576			–
206	55,1 / 1,004	18,2 / 0,548	128,3 / 2,556			–
246	85,9 / 2,229	31,2 / 1,304	203,1 / 5,762			–
286	145,1 / 4,977	44,4 / 2,495	334,4 / 12,449			–
336	223,9 / 10,486	64,2 / 4,74	512,0 / 25,712	Depending on	Depending on	–
138	16,2 / 0,145	9,9 / 0,143	42,3 / 0,433	distance dimension E	distance dimension E	–
158	19,5 / 0,205	14,9 / 0,252	54,0 / 0,662			–
168	29,4 / 0,360	15,2 / 0,318	74,0 / 1,038			–
188	41,7/ 0,611	15,6 / 0,396	99,0 / 1,618			–
208	54,1 / 0,971	22,4 / 0,680	130,5 / 2,622			–
248	84,0 / 2,144	38,2 / 1,605	206,2 / 5,893			–
288	142,5 / 4,823	53,8 / 3,056	338,8 / 12,702			–
338	220,1 / 10,18	78,0 / 5,817	518,2 / 26,177			–

[1] Hubs with max. bore

Cylindrical bores

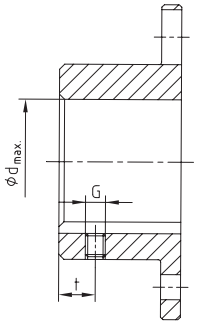

Standard hub 1.0 with feather keyway according to DIN 6885 sheet 1 1.									
Size	$d_{max.}$	G	t	T_A [Nm]	Size	$d_{max.}$	G	t	T_A [Nm]
20	20	M5	6	2,0	105	105	M12	30	40,0
25	25	M5	8	2,0	115	115	M12	30	40,0
35	35	M6	15	4,8	135	135			
38	38	M6	15	4,8	136 / 138	135			
42	42	M8	20	10,0	156 / 158	150			
50	50	M8	20	10,0	166 / 168	165			
60	60	M8	20	10,0	186 / 188	180	On request of customer		
70	70	M10	20	17,0	206 / 208	200			
80	80	M10	20	17,0	246 / 248	240			
85	85	M10	25	17,0	286 / 288	280			
90	90	M12	25	40,0	336 / 338	330			

Backlash-free shaft-hub connections without feather key

Selection: In case of use in hazardous areas the clamping ring hubs must be selected in a way that there is a minimum safety factor of s = 2 between the peak torque (including all operating parameters) and the nominal torque and frictional torque of engagement of the coupling.

Clamping ring hub type
(clamping screws outside)

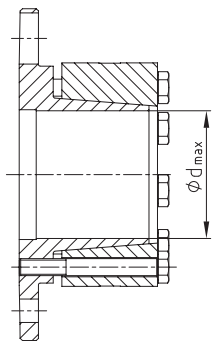

Clamping ring hub type 6.0
(clamping screws inside)

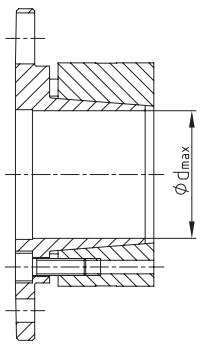

Type with CLAMPEX® element type 603

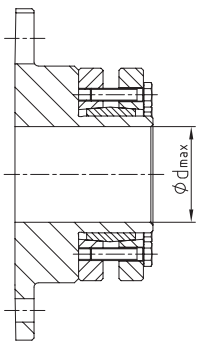

RADEX®-N NN, NANA 1 and NANA 2
Steel lamina couplings

Standard types



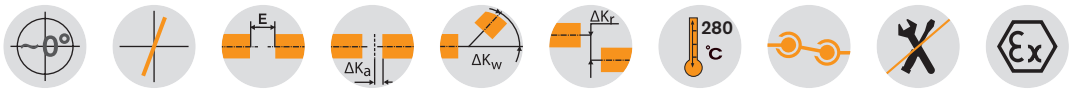

Components

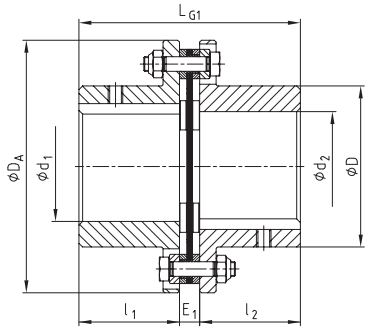

Type NN

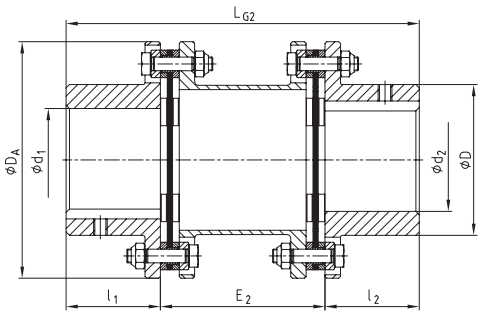

Type NANA 1

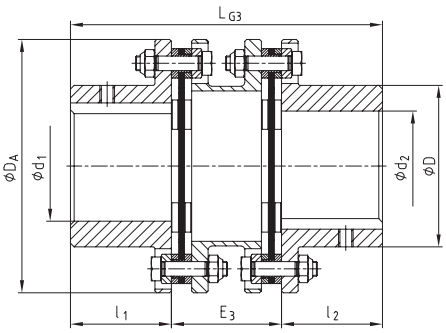

Type NANA 2

RADEX®-N Types NN, NANA 1, NANA 2										
Size	Maximum finish bore	Dimensions [mm]								
	d_1/d_2	D	D_A	l_1/l_2	L_{G1}	E_1	L_{G2}	E_2	L_{G3}	E_3
20	20	32	56	20	45	5	100	60	–	–
25	25	40	68	25	56	6	110	60	–	–
35	35	54	82	40	86	6	150	70	–	–
38	38	58	94	45	98	8	170	80	–	–
42	42	68	104	45	100	10	170	80	–	–
50	50	78	126	55	121	11	206	96	–	–
60	60	88	138	55	121	11	206	96	170	60
70	70	102	156	65	141	11	246	116	200	70
80	80	117	179	75	164	14	286	136	233	83
85	85	123	191	80	175	15	300	140	246	86
90	90	132	210	80	175	15	300	140	251	91
105	105	147	225	90	200	20	340	160	281	101
115	115	163	265	100	223	23	370	170	309	109
135	135	184	305	135	297	27	520	250	–	–
136	135	180	300	135	293	23				
156	150	195	325	150	327	27				
166	165	225	350	165	361	31				
186	180	250	380	185	401	31				
206	200	275	420	200	437	37				
246	240	320	500	240	524	44				
286	280	383	567	280	612	52				
336	330	445	660	330	718	58	acc. to customer's request			
138	135	180	300	135	293	23				
158	150	195	325	150	327	27				
168	165	225	350	165	361	31				
188	180	250	380	185	401	31				
208	200	275	420	200	437	37				
248	240	320	500	240	524	44				
288	280	383	567	280	612	52				
338	330	445	660	330	718	58				

Ordering example:

RADEX®-N 60	NANA 1	Ø50	Ø60
Coupling size	Type	Finish bore d_1	Finish bore d_2

RADEX®-N NENA 1, NENA 2, NENE 1 and NNZ
Steel lamina couplings

Standard types



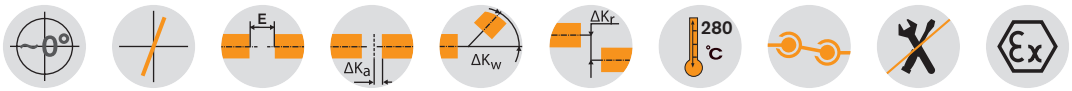

Components

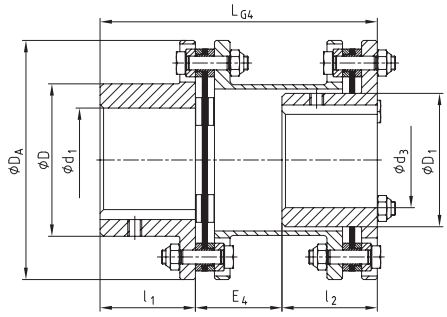

Type NENA 1

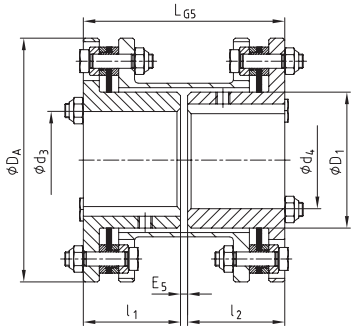

Type NENE 1

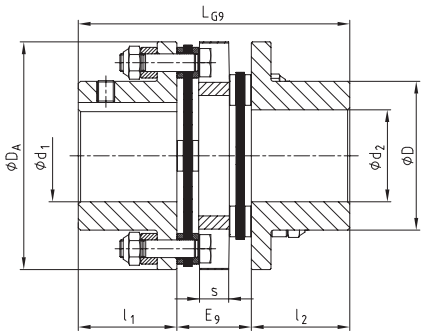

Type NNZ

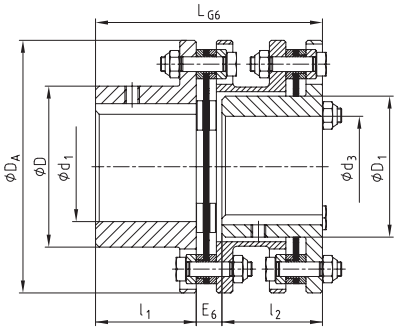

Type NENA 2

RADEX®-N Types NENA 1, NENE 1, NENA 2, NNZ															
Size	Maximum finish bore		Dimensions [mm]												
	d_1/d_2	d_3/d_4	D	D_1	D_A	l_1/l_2	L_{G4}	E_4	L_{G5}	E_5	L_{G6}	E_6	L_{G9}	E_9
20	20	–	32	–	56	20	–	–	–	–	–	–	58	18
25	25	–	40	–	68	25	–	–	–	–	–	–	70	20
35	35	–	54	–	82	40	–	–	–	–	–	–	102	22
38	38	–	58	–	94	45	–	–	–	–	–	–	118	28
42	42	–	68	–	104	45	–	–	–	–	–	–	124	34
50	50	–	78	–	126	55	–	–	–	–	–	–	144	34
60	60	55	88	77	138	55	160	50	114	4.	124	14	144	34
70	70	65	102	90	156	65	190	60	134	4.	144	14	166	36
80	80	75	117	104	179	75	220	70	154	4.	167	17	–	–
85	85	80	123	112	191	80	232	72	164	4.	178	18	–	–
90	90	85	132	119	210	80	233	73	166	6	184	24	–	–
105	105	90	147	128	225	90	263	83	186	6	204	24	–	–
115	115	100	163	145	265	100	288	88	206	6	227	27	–	–

Ordering example:

RADEX®-N 60	NENA 1	Ø50	Ø60
Coupling size	Type	Finish bore d_1	Finish bore d_2

RADEX®-N NANA 4 and NNW
Steel lamina couplings

Customized types



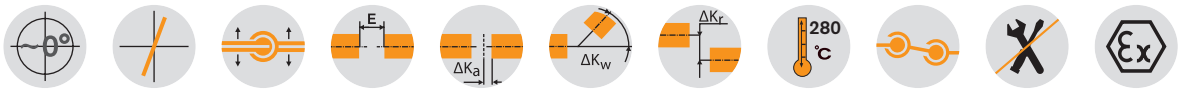

Components

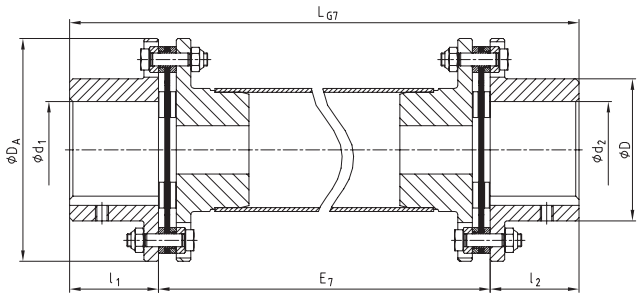

Type NANA 4

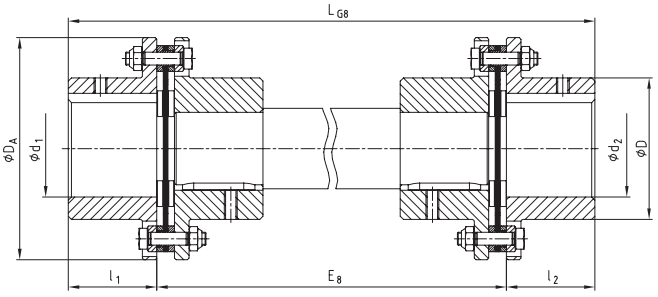

Type NNW

RADEX®-N Types NANA 4, NNZ and NNW								
Size	Maximum finish bore	Dimensions [mm]						
	d_1/d_2	D	D_A	l_1/l_2	L_{G7}	E_7	L_{G8}	E_8
20	20	32	56	20				
25	25	40	68	25				
35	35	54	82	40				
38	38	58	94	45				
42	42	68	104	45				
50	50	78	126	55				
60	60	88	138	55				
70	70	102	156	65				
80	80	117	179	75				
85	85	123	191	80				
90	90	132	210	80				
105	105	147	225	90				
115	115	163	265	100				
135	135	184	305	135				
136	135	180	300	135				
156	150	195	325	150				
166	165	225	350	165				
186	180	250	380	185				
206	200	275	420	200				
246	240	320	500	240				
286	280	383	567	280				
336	330	445	660	300				
138	135	180	300	135				
158	150	195	325	150				
168	165	225	350	165				
188	180	250	380	185				
208	200	275	420	200				
248	240	320	500	240				
288	280	383	567	280				
338	330	445	660	300				

$L_{G7} = E_7 + l_1 + l_2$

Intermediate shaft dimension according to customer's specification

$L_{G8} = E_8 + l_1 + l_2$

Intermediate shaft dimension according to customer's specification

Ordering example:

RADEX®-N 60	NANA 4	Ø50	Ø60	2500
Coupling size	Type	Finish bore d_1	Finish bore d_2	Shaft distance dimension

RADEX®-N Composite
Steel lamina couplings

Corrosion-resistant type for big shaft distance dimensions



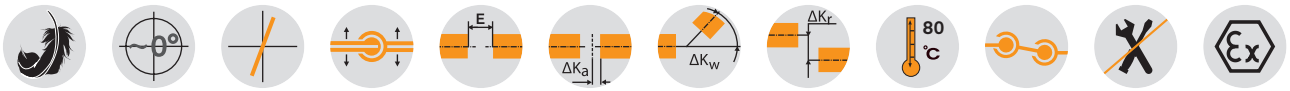

Components

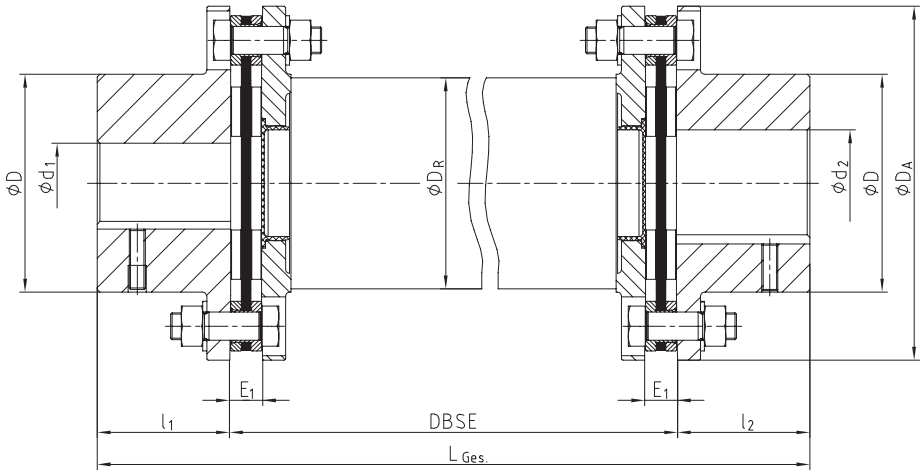

RADEX®-N Type NANA 4 CFK											
Size	Torque [1] [Nm]		Dimensions [mm]								
	T_{KN}	$T_{K\,max}$	D_A	d_1/d_2 max.	D	l_1/l_2	E_1	DBSE	L_{tptal}	Composite tube D_R	Max. DBSE[2] with 1500 rpm
70	800	1600	149	70	102	65	11	acc. to customer's specifications	$l_1 + l_2 +$ DBSE	95	3500
85	1800	3600	184	85	123	80	15			117	3900
90	2500	5000	200	90	135	80	15			128	4100
115	4500	9000	253	115	163	100	23			160	4600

[1] For selection of coupling see page 14 et seqq.
[2] For higher speeds or bigger shaft distance dimensions please consult with KTR's engineering department (+49 5971 798-484). The above-mentioned characteristic figures (e. g. max. DBSE) can be varied by Composite tubes optimized for the application, if necessary.

Particularly the steel lamina couplings are well suited for applications with especially large distance dimensions between the drive and the driven side (e. g. cooling towers, ventilators etc.) due to their design. In order to be able to realize high speeds with large distance dimensions, RADEX®-N couplings with intermediate shafts made of glass fiber or carbon fiber reinforced nylon (GRP or CFRP) are used, if necessary.

Ordering example:	RADEX®-N 85	NANA 4 CFK	Ø60	Ø70	3000
	Coupling size	Type	Finish bore d_1	Finish bore d_2	Shaft distance dimension

RADEX®-N NANA 3
Steel lamina couplings

Pump drives according to API 610





RADEX®-N Type NANA 3							
Size	Max. finish bore	Dimensions [mm]				Perm. displacements	
	d	D	D_A	$E_{Standard}$ [1]	l_1/l_2	Angle [°] each lamina	Axial [mm]
42	42	68	104	100	45	1,0	2,8
50	50	78	126	140/180	55	1,0	3,2
60	60	88	138	100/140/180/250	55	1,0	2,0
70	70	102	156	100/140/180	65	1,0	2,2
80	80	117	179	100/140/180/250	75	1,0	2,6
85	85	123	191	100/140/180/250	80	1,0	2,3
90	90	132	210	140/180/250	80	1,0	2,0
105	105	147	225	250	90	1,0	2,4
115	115	163	265	250	100	1,0	2,8
135	135	184	305	250	135	1,0	3,5
136	135	180	300		135	0,7	3,7
156	150	195	325		150	0,7	4,2
166	165	225	350		165	0,7	4,5
186	180	250	380		185	0,7	4,8
206	200	275	420		200	0,7	5,2
246	240	320	500		240	0,7	6,0
286	280	383	567	acc. to customer's specifications	280	0,7	6,7
336	330	445	660		330	0,7	7,5
138	135	180	300		135	0,5	2,6
158	150	195	325		150	0,5	2,8
168	165	225	350		165	0,5	3,0
188	180	250	380		185	0,5	3,2
208	200	275	420		200	0,5	3,5
248	240	320	500		240	0,5	4,0
288	280	383	567		280	0,5	4,5
338	330	445	660		330	0,5	5,0

[1] Other distance dimensions E available on request.

Ordering example:

RADEX®-N 60	NANA 3	Ø50	Ø60	140
Coupling size	Type	Finish bore d_1	Finish bore d_2	Shaft distance dimension

Components

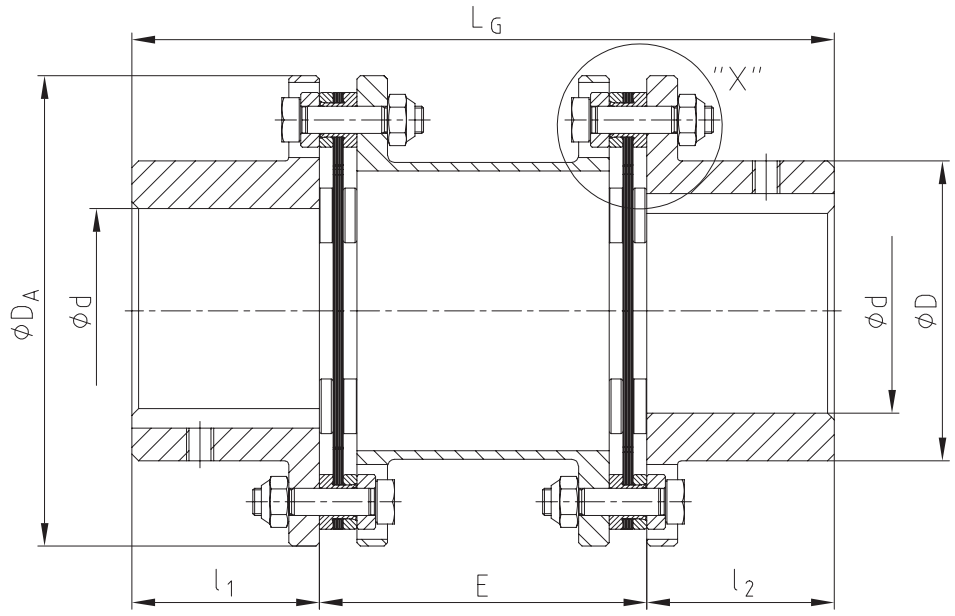

Detail “X”

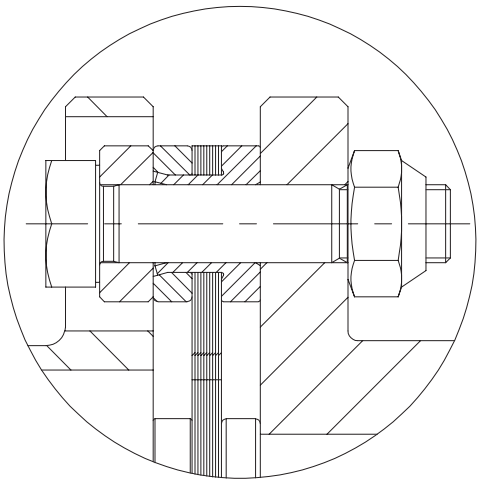

Safety gear of the spacer:
The lamina sets have a sleeve in order to secure the spacer if the lamina breaks.

Technical data

The following lamina types are distinguished with RIGIFLEX®-N:

Size 35 – 65
(lamina with 4 holes)

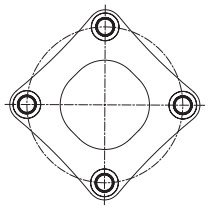

Size 75 – 160
(lamina with 6 holes)

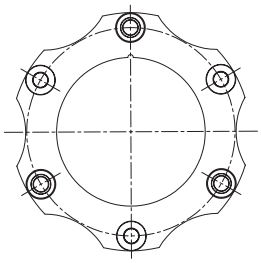

Size 166 – 406
(lamina with 6 holes)

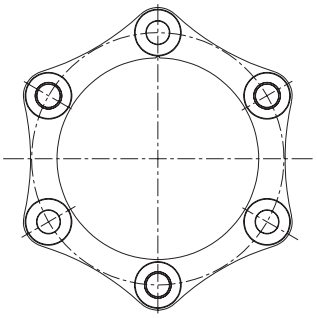

Size 168 – 408
(lamina with 8 holes)

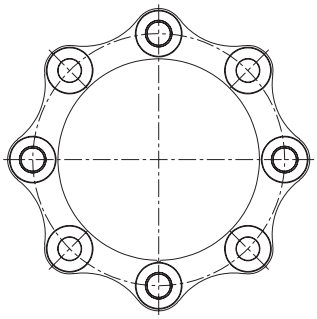

Torques and displacements

Size	Lamina type	Torques [Nm]			Perm. displacements						
		T_{KN}	$T_{K\ max.}$	T_{KW}	Angular displacement ± Kw [1] [°]	Axial displacement ± Ka [mm]	Radial ± Kr [mm]				
							E=100	E=140	E=180	E=200	E=250
35		130	260	65	0,7	1,2	0,90	1,40	–	–	–
50	lam. w. 4 holes	270	540	135	0,7	1,4	0,77	1,26	–	–	–
65		550	1100	275	0,7	1,5	0,75	1,23	1,72	–	–
75		1100	2200	550	0,7	1,8	0,73	1,22	1,71	–	–
85		1900	3800	950	0,7	2,1	–	1,14	1,62	1,87	2,48
110		3500	7000	1750	0,7	2,4	–	1,05	1,54	1,78	2,39
120		5750	11500	2875	0,7	2,6	–	1,00	1,49	1,73	2,35
140		10500	21000	5250	0,7	3,3	–	–	–	1,55	2,16
160		16000	32000	8000	0,7	3,8	–	–	–	–	1,99
166	lamina with	19000	38000	9500	0,7	3,7					
196	l6 holes	22500	45000	11250	0,7	4,2					
216		32000	64000	16000	0,7	4,5					
256		52500	105000	26250	0,7	5,2					
306		86000	172000	43000	0,7	6,0					
346		135000	270000	67500	0,7	6,7					
406		210000	420000	105000	0,7	7,5	Mounting dimension E as indicated by the customer				
168		25000	50000	12500	0,5	2,6					
198		30000	60000	15000	0,5	2,8					
218		42500	85000	21500	0,5	3,0					
258	lamina with	70000	140000	35000	0,5	3,5					
308	8 holes	115000	230000	57500	0,5	4,0					
348		180000	360000	90000	0,5	4,5					
408		280000	560000	140000	0,5	5,0					

[1] Angular displacement each lamina set

If axial, angular and radial shaft displacement arises in parallel please note the following table:

Size	Permissible angular displacement							
	0	0,1	0,2	0,3	0,4	0,5	0,6	0,7
	Permissible axial displacement							
35	1,20	1,00	0,85	0,74	0,60	0,40	0,20	0,00
50	1,40	1,20	1,00	0,80	0,60	0,40	0,20	0,00
65	1,50	1,29	1,07	0,86	0,64	0,43	0,22	0,00
75	1,80	1,54	1,29	1,03	0,77	0,52	0,26	0,00
85	2,10	1,80	1,50	1,20	0,90	0,60	0,30	0,00
110	2,40	2,06	1,71	1,37	1,03	0,69	0,34	0,00
120	2,60	2,23	1,86	1,48	1,11	0,74	0,37	0,00
140	3,30	2,83	2,36	1,88	1,41	0,94	0,47	0,00
160	3,80	3,26	2,71	2,17	1,63	1,09	0,54	0,00
166	3,70	3,17	2,64	2,12	1,59	1,06	0,53	0,00
196	4,20	3,60	3,00	2,40	1,80	1,20	0,60	0,00
216	4,50	3,86	3,21	2,57	1,93	1,29	0,64	0,00
256	5,20	4,46	3,71	2,97	2,23	1,49	0,74	0,00
306	6,00	5,14	4,29	3,43	2,57	1,72	0,86	0,00
346	6,75	5,79	4,82	3,86	2,89	1,93	0,96	0,00
406	7,50	6,43	5,36	4,28	3,21	2,14	1,07	0,00
168	2,60	2,08	1,56	1,04	0,52	0,00	–	–
198	2,80	2,24	1,68	1,12	0,56	0,00	–	–
218	3,00	2,40	1,80	1,20	0,60	0,00	–	–
258	3,50	2,80	2,10	1,40	0,70	0,00	–	–
308	4,00	3,20	2,40	1,60	0,80	0,00	–	–
348	4,50	3,60	2,70	1,80	0,90	0,00	–	–
408	5,00	4,00	3,00	2,00	1,00	0,00	–	–

Technical data

Permissible speeds and stiffness								
Size	Max. speed [rpm]	Each lamina set		ct [Nm/rad] for complete coupling with mounting length E				
		cw [Nm/rad]	ct x 10^6 [Nm/rad]	E=100	E=140	E=180	E=200	E=250
35	23000	170	0,056	65020	56700	–	–	–
50	18000	490	0,27	73953	63990	–	–	–
65	13600	260	0,5	146022	129938	117046	–	–
75	12400	1000	0,67	306145	278381	255234	–	–
85	11000	1500	0,9	–	406641	369429	353265	318433
110	9000	1500	1,5	–	664284	637587	625028	595693
120	8000	3000	2,0	–	1798018	1637553	1567602	1416348
140	6400	10000	3,5	–	–	–	2363340	2226630
160	5600	10350	6,9	–	–	–	–	2654894
166	5600	26800	13,0					
196	5200	35800	17,0					
216	4600	41500	19,0					
256	3900	65000	31,0					
306	3300	112000	55,0					
346	2900	205000	79,0					
406	2500	276000	125,0	Mounting dimension E as indicated by the customer				
168	5600	44300	20,0					
198	5200	82200	26,0					
218	4600	90000	30,0					
258	3900	138000	49,0					
308	3300	234000	83,0					
348	2900	416000	125,0					
408	2500	562000	200,0					

cw = angular stiffness
ct = torsion spring stiffness

Weights and mass moments of inertia												
Size	Hub (max. bore)		Spacer complete [kg]					Spacer complete [x10^3 kgm^2]				
	[kg]	[kgm^2]	E=100	E=140	E=180	E=200	E=250	E=100	E=140	E=180	E=200	E=250
35	0,60	0,0007	1,030	1,120	–	–	–	0,00040	0,00050	–	–	–
50	0,92	0,001019	2,262	2,442	–	–	–	0,00256	0,00263	–	–	–
65	2,7	0,00541	3,922	4,183	4,445	–	–	0,00810	0,00830	0,00828	–	–
75	2,4	0,00566	4,482	4,842	5,202	–	–	0,01143	0,01191	0,01239	–	–
85	3,7	0,01135	–	7,154	7,548	7,746	8,239	–	0,02364	0,02427	0,02459	0,02538
110	6,7	0,03222	–	12,492	13,478	13,972	15,205	–	0,06291	0,06540	0,06665	0,06976
120	9,2	0,05238	–	–	17,324	17,842	19,137	–	–	0,10314	0,10458	0,10818
140	18,2	0,15175	–	–	–	32,530	34,325	–	–	–	0,31901	0,32845
160	29,9	0,33890	–	–	–	–	52,458	–	–	–	–	0,68640
166	28,0	0,32										
196	37,0	0,554										
216	50,0	0,85										
256	95,0	2,35										
306	138,0	4,55										
346	215,0	9,75										
406	310,0	18,95	Mounting dimension E as indicated by the customer									
168	30,0	0,33										
198	40,0	0,56										
218	52,0	0,88										
258	99,0	2,43										
308	142,0	4,78										
348	222,0	9,83										
408	325,0	19,22										

RIGIFLEX®-N
Steel lamina coupling

Standard type A

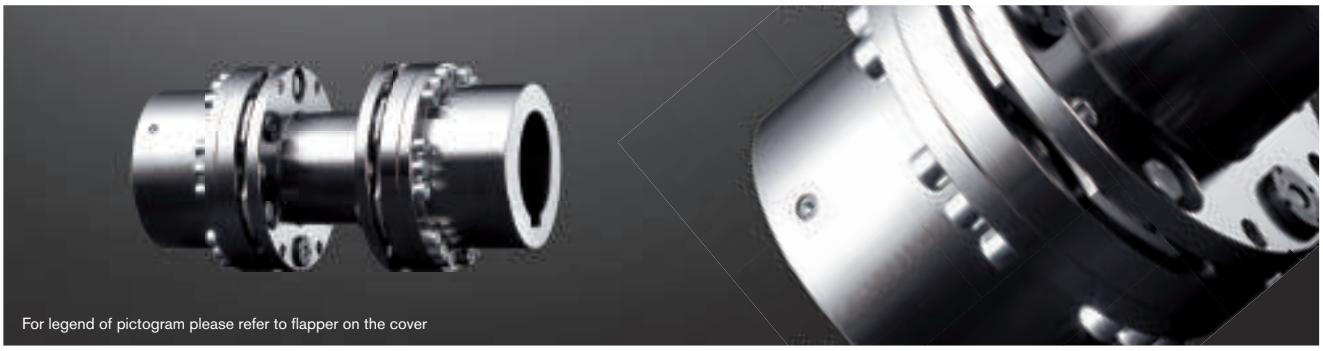

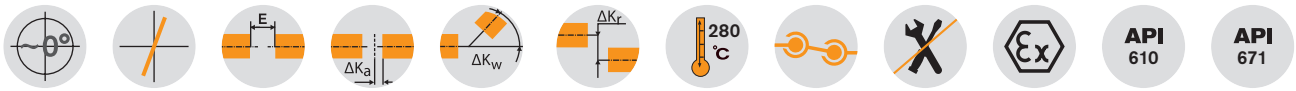

Components

Size 35

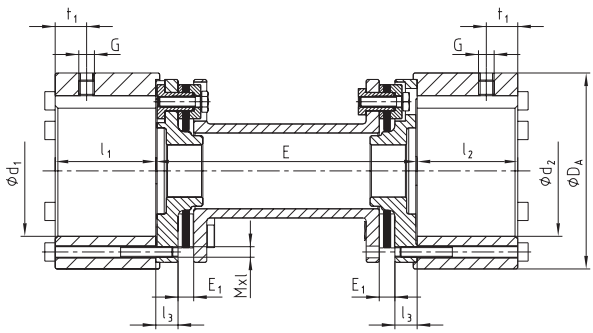

Size 50 - 408

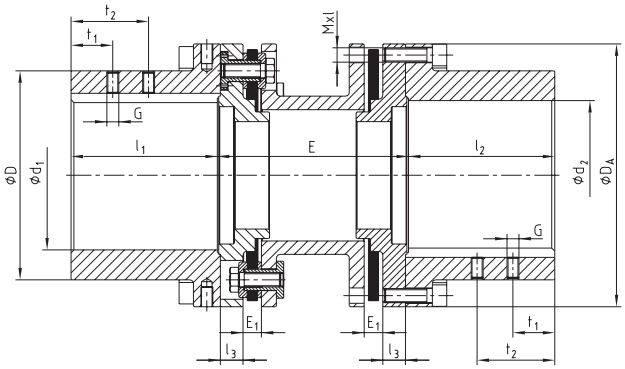

RIGIFLEX®-N Type A																			
Size	Torques [Nm]			Max. finish bore	Dimensions [mm]													Screws DIN EN ISO 4762	
	T_{KN}	$T_{K\,max.}$	T_{KW}	d_1/d_2	D	D_A	$l_1/l2$	l_3	G	t_1	t_2	E_1	E [1]					Mxl	T_A [Nm]
35	130	260	65	50	–	75	38,5	8,5	M6	15	–	6	100	140	–	–	–	M4x45	4,1
50	270	540	135	50	70	95	50	12	M6	10	–	9	100	140	–	–	–	M6x22	14
65	550	1100	275	65	100	126	63	12	M8	20	–	11	100	140	180	–	–	M6x25	14
75	1100	2200	550	75	105	138	62,5	12	M8	20	–	11	100	140	180	–	–	M8x30	35
85	1900	3800	950	85	120	156	72,5	15	M10	20	–	12	–	140	180	200	250	M8x30	35
110	3500	7000	1750	110	152	191	87	18	M10	25	–	12	–	140	180	200	250	M10x35	69
120	5750	11500	2875	120	165	213	102	20	M12	25	–	12	–	–	180	200	250	M12x40	120
140	10500	21000	5250	140	200	265	126	25	M12	30	–	15	–	–	–	200	250	M16x50	295
160	16000	32000	8000	160	230	305	145	31	M12	30	–	15	–	–	–	–	250	M16x55	295
166	19000	32000	9500	160	230	305	155	31	M16	30	70	17						M20x50	560
196	22500	45000	11250	190	260	330	185	32	M16	40	90	24						M20x50	560
216	32000	64000	16000	210	285	370	205	32	M20	50	110	26						M20x65	560
256	52500	105000	26250	250	350	440	245	38	M20	70	130	31						M24x80	970
306	86000	172000	43000	300	400	515	295	43	M24	70	130	36						M27x100	1450
346	135000	270000	67500	340	460	590	335	55	M24	95	175	45						M30x110	1950
406	210000	420000	105000	400	530	675	395	58,5	M24	95	175	50	acc. to customer's specifications					M36x130	3300
168	25000	50000	12500	160	230	305	155	31	M16	30	70	17						M20x50	560
198	30000	60000	15000	190	260	330	185	32	M16	40	90	24						M20x50	560
218	42500	85000	21500	210	285	370	205	32	M20	50	110	26						M20x65	560
258	70000	140000	35000	250	350	440	245	38	M20	70	130	31						M24x80	970
308	115000	230000	57500	300	400	515	295	43	M24	70	130	36						M27x100	1450
348	180000	360000	90000	340	460	590	335	55	M24	95	175	45						M30x110	1950
408	280000	560000	140000	400	530	675	395	58,5	M24	95	175	50						M36x130	3300

[1] Other shaft distance dimensions available on request.
For selection of coupling see page 14 et seqq. Mounting instructions No. 47410 available at www.ktr.com.

Ordering example:

RIGIFLEX®-N 120	A	Ø 100	Ø 120	200
Coupling size	Type	Bore d_1	Bore d_2	Shaft distance dimension E

Flange connection

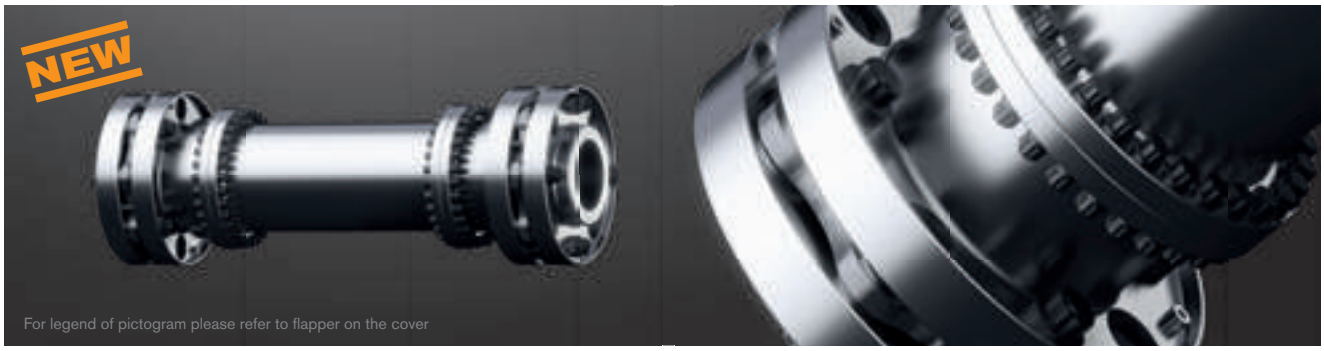



Components

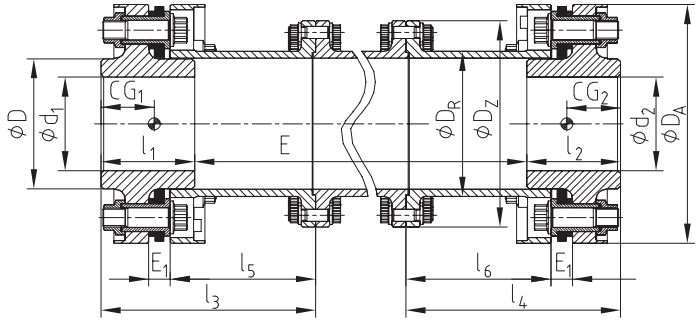

RIGIFLEX®-HP Bauart C

Size	Torques [Nm]		Maximum finish bore	Dimensions [mm]										
	T_{KN}	$T_{K\,max.}$	d_1/d_2	D	DA	D_z	D_R	E_1	E	E_{min}	CG_1/CG_2 [2]	l_1/l_2	l_3/l_4	l_5/l_6
158	20000	26000	85	119	220	195	135	17	acc. to customer's specifications	335	46	85	189	130
168	30000	39000	100	139	255	220	155	23		395	55	100	229	155
188	38000	49400	105	147	265	235	165	23		375	55	105	229	155
208	50000	65000	120	168	298	245	186	23		350	57	120	229	155
228	59000	76700	125	178	315	270	199	33		425	65	125	265	175
248	72000	93600	140	196	335	300	217	33		395	67	140	265	175
278	115000	149500	160	225	380	335	248	33		355	70	160	265	175
318	180000	234000	180	252	445	370	280	48		495	88	180	348	225
358	253000	328900	210	295	500	415	326	48		435	93	210	348	225
388	330000	429000	235	330	545	464	362	48		400	97	235	348	225

Technical data

Size	Max. speed [rpm]	Perm. Displacements			Stiffness figures		
		Angular displ.[1]	Axial	Radial displ.[1]	Each lamina set	Spacer	Coupling complete[2]
		$\pm K_W$ [°]	$\pm K_A$ [mm]	$\pm K_r$ [mm]	c_t [Nm/rad]	c_{tR} [Nm·mm/rad]	$c_{tE = 457,2}$ [Nm/rad]
158	17300	0,25	3,0	2,30	13,0·10⁶	839·10⁶	1,04·10⁶
168	14900	0,25	3,0	2,32	18,0·10⁶	1535·10⁶	1,79·10⁶
188	14400	0,25	3,3	2,37	28,0·10⁶	1974·10⁶	2,23·10⁶
208	12800	0,25	3,8	2,50	35,0·10⁶	2876·10⁶	3,15·10⁶
228	12100	0,25	4,0	2,44	39,5·10⁶	4123·10⁶	5,06·10⁶
248	11400	0,25	4,2	2,58	60,0·10⁶	5410·10⁶	5,51·10⁶
278	10000	0,25	4,5	2,75	80,0·10⁶	8592·10⁶	7,94·10⁶
318	8500	0,25	5,2	2,70	105,0·10⁶	14724·10⁶	13,00·10⁶
358	7600	0,25	6,0	2,96	155,0·10⁶	26258·10⁶	20,30·10⁶
388	7000	0,25	6,5	3,18	225,0·10⁶	37596·10⁶	27,70·10⁶

[1] Each lamina set [2] with E=457.2 mm and cylindrical maximum finish bore

Size	Coupling[1]		Spacer	
	m [kg]	J [kgm²]	m_R [kg/mm]	J_R [kgm²/mm]
158	45	0,274	20,28·10⁻³	81·10⁻⁶
168	69	0,577	27,282·10⁻³	149·10⁻⁶
188	78	0,711	30,975·10⁻³	191·10⁻⁶
208	97	1,081	35,118·10⁻³	279·10⁻⁶
228	123	1,561	44,397·10⁻³	400·10⁻⁶
248	144	2,109	48,614·10⁻³	524·10⁻⁶
278	190	3,542	58,694·10⁻³	833·10⁻⁶
318	306	7,792	79,311·10⁻³	1427·10⁻⁶
358	405	12,869	104,041·10⁻³	2545·10⁻⁶
388	525	19,257	120,151·10⁻³	3644·10⁻⁶

$c_{t\ total} = 1 / ((1/c_{tE = 457,2}) + ((E - 457,2\ mm) / c_{tR}))$
$m_{total} = m + m_R \cdot (E - 457,2\ mm)$
$J_{total} = J + J_R \cdot (E - 457,2\ mm)$

RIGIFLEX®-HP L
High-performance steel lamina couplings

Type with flange hubs



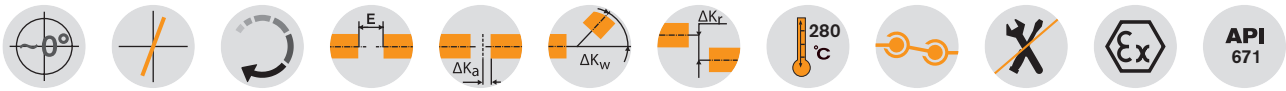

Components

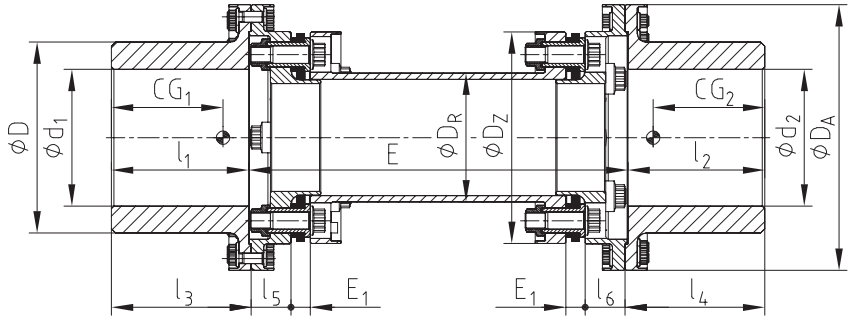

RIGIFLEX®-HP Type L														
Size	Torques [Nm]		Maximum finish bore	Dimensions [mm]										
	T_{KN}	$T_{K\ max.}$	d_1/d_2	D	D_A	D_z	D_R	E_1	E	E_{min}	CG_1/CG_2[2]	l_1/l_2	l_3/l_4	l_5/l_6
158	20000	26000	150	210	310	220	135	17	acc. to customer's spec.	265	140	150	163,5	37,5
168	30000	39000	165	230	320	255	155	23		340	148	165	168,5	48,0
188	38000	49400	180	250	335	265	165	23		340	156	180	183,5	48,0
208	50000	65000	200	280	362	298	186	23		340	165	200	203,5	48,0
228	59000	76700	220	310	390	315	199	33		390	179	220	223,5	54,5
248	72000	93600	240	340	420	334	217	33		390	185	235	238,5	54,5
278	115000	149500	270	380	455	380	248	33		390	202	270	273,5	54,5
318	180000	234000	315	445	550	445	280	48		510	246	315	318,5	71,5
358	253000	328900	350	490	600	500	326	48		510	263	350	353,5	71,5
388	330000	429000	380	535	650	545	362	48		510	277	380	383,5	71,5

Technical data							
Size	Max. speed [rpm]	Perm. displacements			Stiffness figures		
		Angular displ.[1]	Axial displ.	Radial displ.[1]	Each lamina set	Spacer	Coupling complete[2]
		± K_W [°]	± K_A [mm]	± K_r [mm]	c_t [Nm/rad]	c_{tR} [Nm·mm/rad]	$c_{tE = 457,2}$ [Nm/rad]
158	13800	0,25	3,0	1,56	13,0·10⁶	839·10⁶	1,70·10⁶
168	12300	0,25	3,0	1,45	18,0·10⁶	1535·10⁶	3,00·10⁶
188	11400	0,25	3,3	1,45	28,0·10⁶	1974·10⁶	4,08·10⁶
208	10500	0,25	3,8	1,45	35,0·10⁶	2876·10⁶	5,61·10⁶
228	9700	0,25	4,0	1,34	39,5·10⁶	4123·10⁶	7,77·10⁶
248	9000	0,25	4,2	1,34	60,0·10⁶	5410·10⁶	10,70·10⁶
278	8300	0,25	4,5	1,34	80,0·10⁶	8592·10⁶	15,60·10⁶
318	6900	0,25	5,2	1,13	105,0·10⁶	14724·10⁶	26,90·10⁶
358	6300	0,25	6,0	1,13	155,0·10⁶	26258·10⁶	41,20·10⁶
388	5800	0,25	6,5	1,13	225,0·10⁶	37596·10⁶	61,30·10⁶

[1] Each lamina set [2] with E=457.2 mm and cylindrical maximum finish bore

Size	Coupling[1]		Spacer	
	m [kg]	J [kgm²]	m_R [kg/mm]	J_R [kgm²/mm]
158	80	0,717	20,28·10⁻³	81·10⁻⁶
168	115	1,327	27,282·10⁻³	149·10⁻⁶
188	135	1,759	30,975·10⁻³	191·10⁻⁶
208	175	2,771	35,118·10⁻³	279·10⁻⁶
228	235	4,525	44,397·10⁻³	400·10⁻⁶
248	285	6,417	48,614·10⁻³	524·10⁻⁶
278	375	10,381	58,694·10⁻³	833·10⁻⁶
318	642	24,810	79,311·10⁻³	1427·10⁻⁶
358	812	38,404	104,041·10⁻³	2545·10⁻⁶
388	1016	57,062	120,151·10⁻³	3644·10⁻⁶

Ordering example:

RIGIFLEX®-HP 188	L	Ø 160	Ø 180	457,2
Coupling size	Type	Bore d1	Bore d_2	Shaft distance dimension E

Technical data of RIGIFLEX®-HP

Balancing:
Usually RIGIFLEX®-HP-couplings are balanced according to the balancing methods recommended by API 671. The usual methods are as follows:

- Balancing of individual components
- Summation balancing for verifying the balancing of individual components. It has to be made sure that adjustments may be performed on individual components only.
- Summation balancing with amendment of the balancing quality on the complete coupling.
- It goes without saying that different balancing methods as defined by the customer are possible.

Axial natural frequency:
With the coupling selection the axial natural frequency has to be reviewed (critical speed). According to API 671 the critical speed should be +_ 10 % beyond one time and two times the operating speed of the drive.

Screwing during transport and mounting:
With balancing, transporting and mounting of the coupling the lamina sets are firmly clamped axially via transport screws and distance washers (to protect the lamina sets from damaging). Please note: Before start-up of the coupling it is absolutely necessary to remove the screwings!

Axial pre-stress of lamina sets:
If modifications of the shaft distance dimension (e. g. caused by thermal expansion) have to be expected, the lamina sets can be axially prestressed. As a result the coupling operates in neutral position (zero position) of the lamina sets with normal operation.

Spacer disks for couplings with taper bores:
With the use of taper shafts the shaft distance dimension may lightly vary due to displacement. To compensate for spacer disks are added to the coupling on request. The disks are mounted on site, if necessary.

Shaft-hub-connections:
Usually RIGIFLEX®-HP is supplied with taper bores for an oil press fit. As an alternative feather key connections, flange connections or mechanical clamping connections, e. g. via KTR CLAMPEX® clamping sets, are available.

Delivery condition:
Depending on the customer's request, the RIGIFLEX®-HP couplings can be delivered either fully assembled or as individual assemblies. The lamina sets are basically assembled and may only be disassembled on consultation with the manufacturer.

Mounting instructions:
See: www.ktr.com



Flange couplings

Types and operating description	188
BoWex® FLE-PA	
BoWex® FLE-PA	190
BoWex® FLE-PAC	192
Selection according to SAE standard	194
Mounting dimensions according to SAE standard	195
Programme of special flanges, deviations from SAE standard	196
Flange couplings in KUBOTA engines	198
Flange couplings in Perkins engines	199
Flange couplings in DEUTZ engines	200
MONOLASTIC®	
Type with 3 holes	202
Type SAE	203
Examples of application	204
BoWex-ELASTIC®	
Technical data and displacements	206
Type HE1 and HE2	207
Type HE3 and HE4	208
Type HE-ZS and HEW	210
Type HEG	212

BoWex® FLE-PA



BoWex® FLE-PAC



MONOLASTIC®



BoWex® ELASTIC®



Properties of flange couplings

	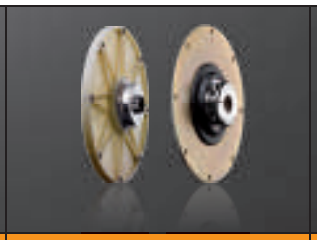	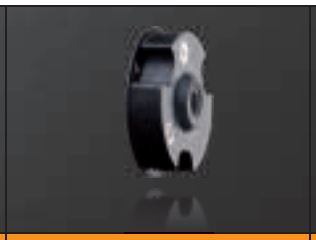	
Product	**BoWex® FLE-PA/-PAC**	**MONOLASTIC®**	**BoWex-ELASTIC®**
Type	Torsionally rigid flange coupling	Flexible flange coupling	Highly flexible flange coupling
Properties			
Torsionally rigid	●		
Torsionally flexible		●	●
Highly flexible			●
Damping vibrations		●	●
Maintenance-free	●	●	●
Axial plug-in	●	●	●
Special features/applications			
Variant diversity	very high	high	very high
Flange dimension	SAE standard and special dimensions	Type 3/4 hole, SAE standard, special dimensions	SAE standard and special dimensions
Internal spline	see standard programme of BoWex® hubs	for SAE or DIN pump shafts	see standard programme of BoWex® hubs
Applications	hydrostatic drives of construction machines, agricultural machines, …	hydrostatic drives of construction machines, agricultural machines, …	generators, splitterboxes, water pumps, piston compressors, agricultural machines, gensets, mill drives, separator drives, …
Performance data			
Max. rated torque T_{KN} [Nm]	5.300	1.500	45.000
Max. speed [rpm]	6.000	6.000	6.200
Flange (standard and special)			
Material	fibre-glass reinforced Polyamide (PA) combination of polyamide with carbon fibre share and steel flange (PAC)	Natural rubber	Natural rubber
Elastomer hardness	torsionally rigid	65, 70 Shore A	"various kinds of hardness for vibration adaptation of drives"
Flange (Standard)			
Temperature range [°C] min. / max.	- 25 / + 130 (PA) - 25 / + 130 (PAC)	- 40/+ 90	- 40/+ 90
Engine power [kW]			
Max.	800	250	5.000

● ≈ Standard

FLANGE COUPLINGS
TYPES AND OPERATING DESCRIPTION

Product finder of flange couplings

	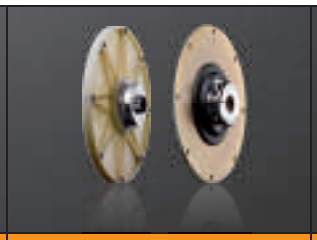	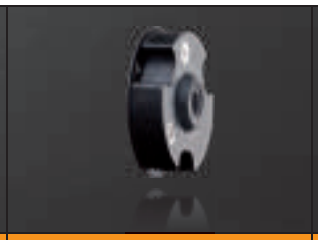	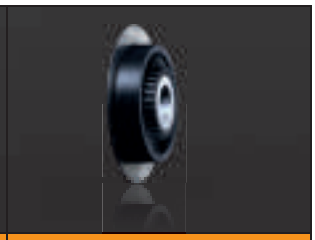
Product	**BoWex® FLE-PA/-PAC**	**MONOLASTIC®**	**BoWex-ELASTIC®**
Type	Torsionally rigid flange coupling	Flexible flange coupling	Highly flexible flange coupling
Geometries			
Design	extremely short	short	short
Max. radial displacement	0,4 mm	1 mm	–
Shaft diameter min. / max. [mm]	20 / 125	20/60	21 / 275
Types (extract)			
Intermediate shaft types » bridging larger shaft distances	–	–	HE-ZS
Shaft-to-shaft connection		–	HEW 1 and 2, HEW-ZS
Flange-to-shaft connection	standard	standard	HE 1, 2, 3, and 4, HE-ZS
For cardan shafts » Intermediate couplings for I. C.-engines	–	–	HEG 1 and 2
Combination with pump mounting flange	●	●	●
Certifications/type examinations			
ATEX			●
Bureau Vertias	●		●
DNV/GL			●
GOST R/ GOST TR	●	●	●

● ≈ Standard

Please note: Pump mounting flanges



For connecting hydraulic pumps to the diesel engine KTR supplies mounting flanges according to SAE connection dimensions sizes SAE 6 to SAE 1. These flanges are made of steel and EN-GJL-250 (GG25) for hydraulic pumps with flange connections according to SAE-A, -B, -C, -D and -E as types with 2 and 4 holes.
Pump connection housings made of EN-GJL-250 (GG 25) to be mounted directly to the back plate of the engine.

BoWex® FLE-PA
Torsionally rigid flange couplings

Axial plug-in, maintenance-free, torsionally rigid

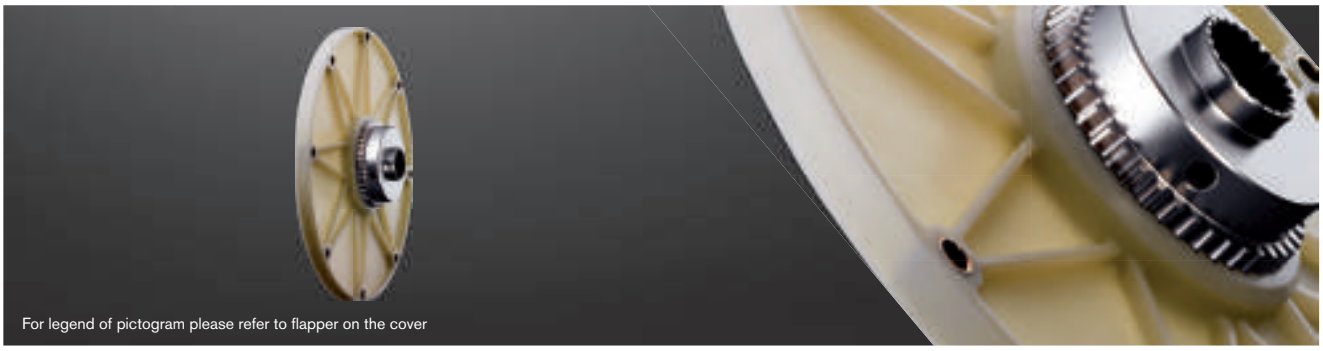

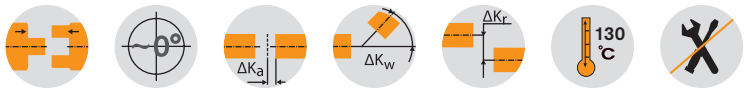

BoWex® FLE-PA – Dimensions/nominal dimension to SAE

Size	Pilot bore	Finish bore d		Dimensions [mm]								Special length l1 max.	Nominal dimension to SAE (D_3)						Max. axial displacement [mm]
		min.	max.	D	D_1	l_1	l_3	l_7	l_8	l_{10}	l_{11}		6 ½"	7 ½"	8"	10"	11 ½"	14"	
48	-	20	48	68	100	50	41	50	20	13	48	bis 60	●	●	●	●			± 2
T 48	13	20	48	68	100	50	38	45	20	13	46	-	●	●	●	●			± 1
T 55	17	20	55	85	115	50	37	48	24	13	48	-	●	●	●	●			± 2
65 / T 65	21	30	65	96	132	55	45	54	27	21	51	bis 70			●	●	●		± 2
T 70	26	30	70	100	153	60	48	56	30	21	57	-				●			± 2
80 / T 80	31	35	80	124	170	90	78	87	30	21	87	-				●	●		± 2
100 / T 100	38	40	100	152	265	110	78	108	35	21	110	-					●	●	± 2
125 / T 125	45	50	125	192	250	140	113	140	50	28	97	-					●	●	± 2

Special flange dimension see page 196 - 199 and on request

Technical data of BoWex® FLE-PA – Torques/Weights/Mass moments of inertia/Torsion spring stiffness

Size	Torque T_K [Nm]			Weight / Mass moment of inertia J	Hub with max. bore Ø	FLE-PA flanges according to SAE						Dynamic torsion spring stiffness with + 60 °C / ψ = 0.4 [Nm/rad]			
	T_{KN}	$T_{K\,max.}$	T_{KW}			6 ½"	7 ½"	8"	10"	11 ½"	14"	0,30 T_{KN}	0,50 T_{KN}	0,75 T_{KN}	1,00 T_{KN}
48	240	600	120	[kg]	0,79	0,32	0,43	0,51	0,64	–	–	35 x 10^3	75 x 10^3	105 x 10^3	125 x 10^3
				[kgm²]	0,0007	0,0021	0,0035	0,0049	0,0085						
T 48	300	750	150	[kg]	0,79	0,32	0,43	0,51	0,64	–	–	40 x 10^3	86 x 10^3	120 x 10^3	143 x 10^3
				[kgm²]	0,0007	0,0021	0,0035	0,0049	0,0085						
T 55	450	1125	225	[kg]	1,12	0,34	0,62	0,45	0,646	–	–	90 x 10^3	140 x 10^3	170 x 10^3	195 x 10^3
				[kgm²]	0,0016	0,0022	0,0053	0,0044	0,0086						
65	650	1600	325	[kg]	2,30	–	–	0,63	0,64	0,89	–	110 x 10^3	160 x 10^3	200 x 10^3	230 x 10^3
				[kgm²]	0,0044			0,0064	0,0065	0,012					
T 65	800	2000	400	[kg]	2,40	–	–	0,63	0,64	0,89	–	130 x 10^3	190 x 10^3	240 x 10^3	280 x 10^3
				[kgm²]	0,0044			0,0064	0,0065	0,012					
T 70	1000	2500	500	[kg]	2,60	–	–	–	0,941	–	–	165 x 10^3	315 x 10^3	345 x 10^3	368 x 10^3
				[kgm²]	0,0059				0,0132						
80	1200	3000	600	[kg]	5,20	–	–	–	1,05	1,12	–	200 x 10^3	410 x 10^3	580 x 10^3	700 x 10^3
				[kgm²]	0,0151				0,015	0,022					
T 80	1500	3750	750	[kg]	5,20	–	–	–	1,05	1,12	–	240 x 10^3	450 x 10^3	638 x 10^3	770 x 10^3
				[kgm²]	0,0151				0,015	0,022					
100	2050	5150	1025	[kg]	9,37	–	–	–	–	1,16	8,45	500 x 10^3	700 x 10^3	856 x 10^3	950 x 10^3
				[kgm²]	0,0401					0,021	0,234				
T 100	2500	6250	1250	[kg]	9,37	–	–	–	–	1,16	8,45	600 x 10^3	830 x 10^3	960 x 10^3	1070 x 10^3
				[kgm²]	0,0401					0,021	0,234				
125	4250	10700	2125	[kg]	19,73	–	–	–	–	2,09	9,85	1280 x 10^3	1885 x 10^3	2280 x 10^3	2665 x 10^3
				[kgm²]	0,1359					0,043	0,306				
T 125	5300	13250	2650	[kg]	19,73	–	–	–	–	2,09	9,85	1600 x 10^3	2250 x 10^3	2700 x 10^3	3200 x 10^3
				[kgm²]	0,1359					0,043	0,306				

Short mounting

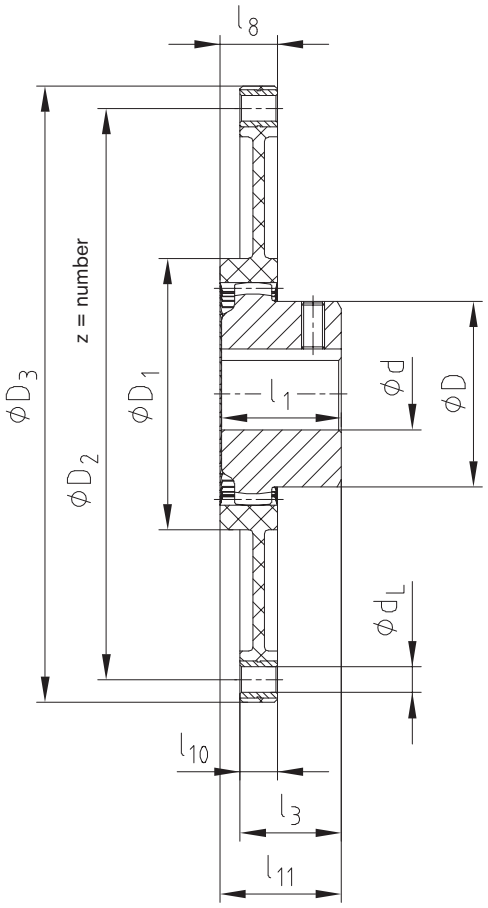

Long mounting

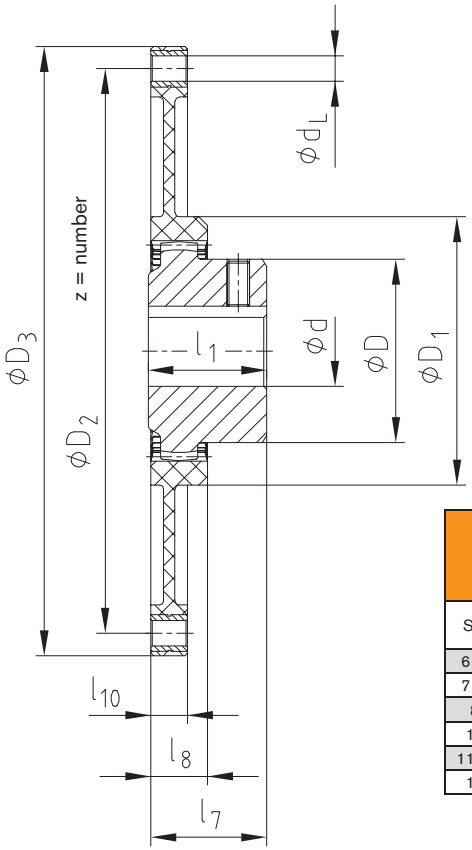

Flange dimensions acc. to SAE J 620 [mm]

Size	D_3	D_2	z	d_L
6 ½"	215,9	200,02	6	9
7 ½"	241,3	222,25	8	9
8"	263,52	244,47	6	11
10"	314,32	295,27	8	11
11 ½"	352,42	333,37	8	11
14"	466,72	438,15	8	13

Example of installation

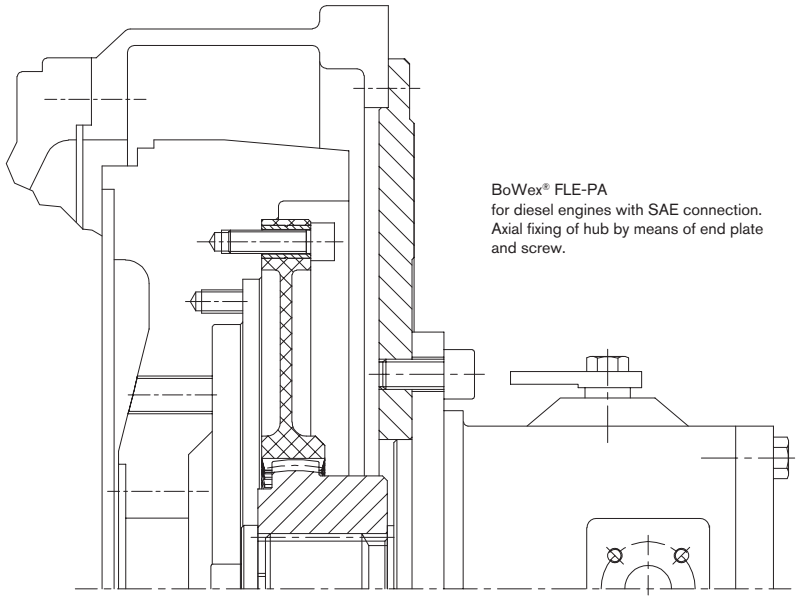

BoWex® FLE-PA
for diesel engines with SAE connection.
Axial fixing of hub by means of end plate and screw.

BoWex® FLE-PAC
Torsionally rigid flange couplings

Axial plug-in, extremely short design, carbon-fibre reinforced material

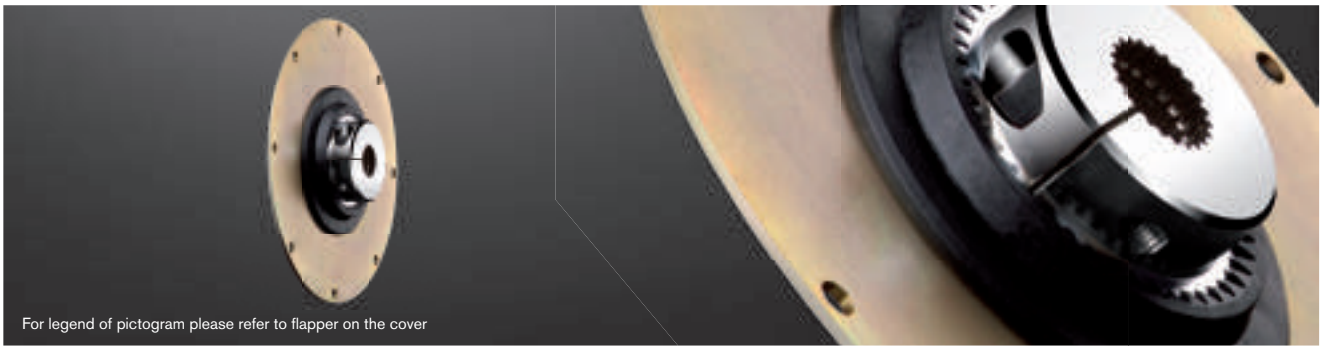

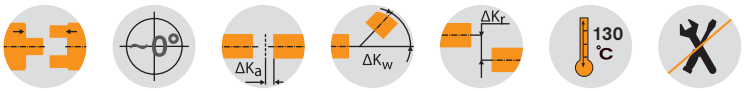

BoWex® FLE-PAC – Dimensions/nominal dimension to SAE

Size	Pilot bore	Finish bore d		Dimensions [mm]							Special length l_1 max.	Nominal dimension to SAE (D_3)						Max. axial displacement [mm]
		min.	max.	D	D_1	l_1	l_3	l_7	l_8	l_{10}		6 ½"	7 ½"	8"	10"	11 ½"	14"	
48 / T 48	13	20	48	68	110	50	35	46	25	3	up to 60	●	●	●	●			± 3
T55	17	20	55	85	108	50	32	42	28	3		●	●	●	●			± 3
65 / T 65	21	30	65	96	165	55	36	46	32	4	up to 70			●	●	●		± 3
80 / T 80	31	35	80	124	220	90	72	76	35	4	-				●	●	●	± 3
100 / T 100	38	40	100	152	280	110	85	102	47	5	-					●	●	± 3
125 / T 125	45	50	125	192	250	140	113	140	50	28	-					●	●	± 3

Special flange dimensions deviating from SAE standard are also available.

Technical data of BoWex® FLE-PAC – Torques/Weights/Mass moments of inertia/Torsion spring stiffness

Size	Torque T_K [Nm]			Weight / Mass moment of inertia I	Hub with max. bore Ø	FLE-PAC flanges according to SAE						Dynamic torsion spring stiffness with + 60 °C / ψ = 0.45 [Nm/rad]			
	T_{KN}	T_K max.	T_{KW}			6 ½"	7 ½"	8"	10"	11 ½"	14"	0,30 T_{KN}	0,50 T_{KN}	0,75 T_{KN}	1,00 T_{KN}
48	240	600	120	[kg]	0,79	0,77	0,98	1,19	1,73			57 x 10^3	89 x 10^3	109 x 10^3	126 x 10^3
				[kgm²]	0,0007	0,0049	0,0077	0,0109	0,0221						
T 48	300	750	150	[kg]	0,79	0,77	0,98	1,19	1,73			74 x 10^3	115 x 10^3	141 x 10^3	164 x 10^3
				[kgm²]	0,0007	0,0049	0,0077	0,0109	0,0221						
T55	450	1125	225	[kg]	1,20	0,74	0,95	1,16	1,7			150 x 10^3	230 x 10^3	285 x 10^3	328 x 10^3
				[kgm²]	0,0016	0,0049	0,0077	0,0109	0,0222						
65	650	1600	325	[kg]	1,50			1,48	2,20	2,83		164 x 10^3	286 x 10^3	365 x 10^3	411 x 10^3
				[kgm²]	0,0027			0,0145	0,0294	0,0467					
T 65	800	2000	400	[kg]	1,60			1,48	2,20	2,83		202 x 10^3	328 x 10^3	420 x 10^3	473 x 10^3
				[kgm²]	0,0035			0,0145	0,0294	0,0467					
80	1200	3000	600	[kg]	5,20				2,27	2,90	5,20	378 x 10^3	620 x 10^3	790 x 10^3	985 x 10^3
				[kgm²]	0,0151				0,0312	0,0485	0,1462				
T 80	1500	3750	750	[kg]	5,20				2,27	2,90	5,20	430 x 10^3	700 x 10^3	900 x 10^3	1120 x 10^3
				[kgm²]	0,0151				0,0312	0,0485	0,1462				
100	2050	5150	1025	[kg]	9,37					3,35	6,22	600 x 10^3	810 x 10^3	1050 x 10^3	1280 x 10^3
				[kgm²]	0,0401					0,0606	0,1828				
T 100	2500	6250	1250	[kg]	9,37					3,35	6,22	700 x 10^3	900 x 10^3	1170 x 10^3	1400 x 10^3
				[kgm²]	0,0401					0,0606	0,1828				
125	4250	10700	2125	[kg]	19,73					2,09	9,85	1280 x 10^3	1885 x 10^3	2280 x 10^3	2665 x 10^3
				[kgm²]	0,1359					0,043	0,306				
T 125	5300	13250	2650	[kg]	19,73					2,09	9,85	1600 x 10^3	2250 x 10^3	2700 x 10^3	3200 x 10^3
				[kgm²]	0,1359					0,043	0,306				

Short mounting

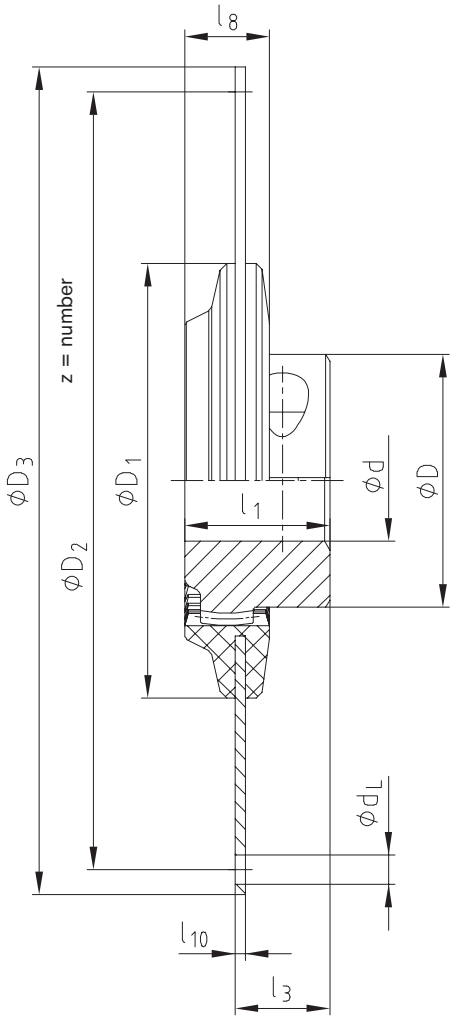

Long mounting

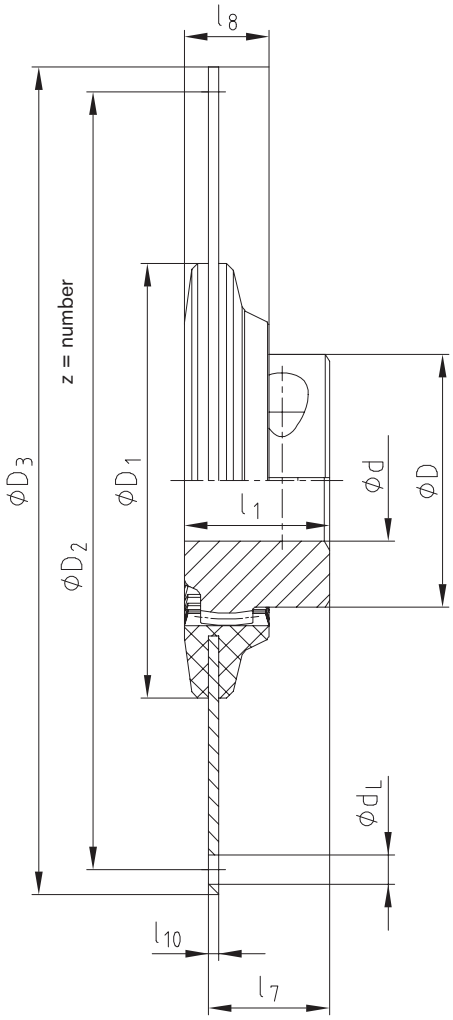

Flange dimensions acc. to SAE J 620 [mm]

Size	D_3	D_2	z	d_L
6 ½"	215,9	200,02	6	9
7 ½"	241,3	222,25	8	9
8"	263,52	244,47	6	11
10"	314,32	295,27	8	11
11 ½"	352,42	333,37	8	11
14"	466,72	438,15	8	14

BoWex® FLE-PAC
Torsionally rigid flange coupling

Selection according to SAE standard



Determination of coupling

Determination of coupling size	**Table 1**
Connection dimension of coupling	**Table 2**
Hub design/Mounting length	**Table 3**

SAE pump mounting flange

Flange size according to SAE 617	**Table 4**
Mounting flange of hydraulic pump	**Table 5**

Short mounting of coupling (l3)

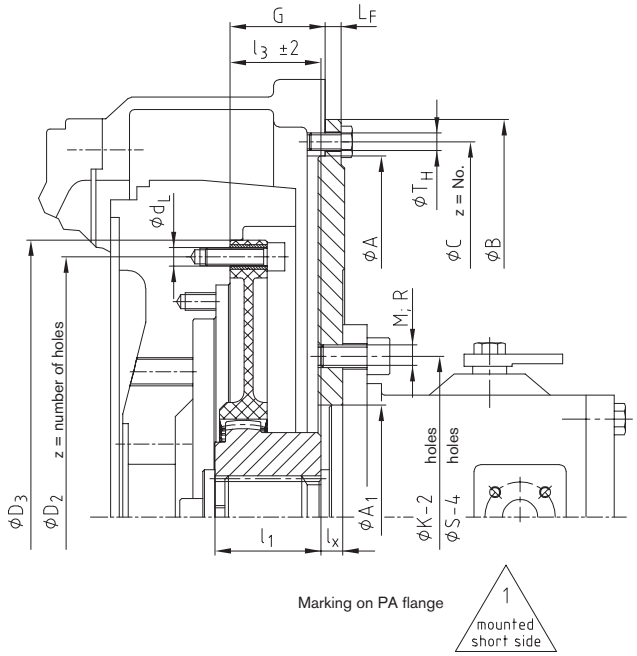

Long mounting of coupling (l7)

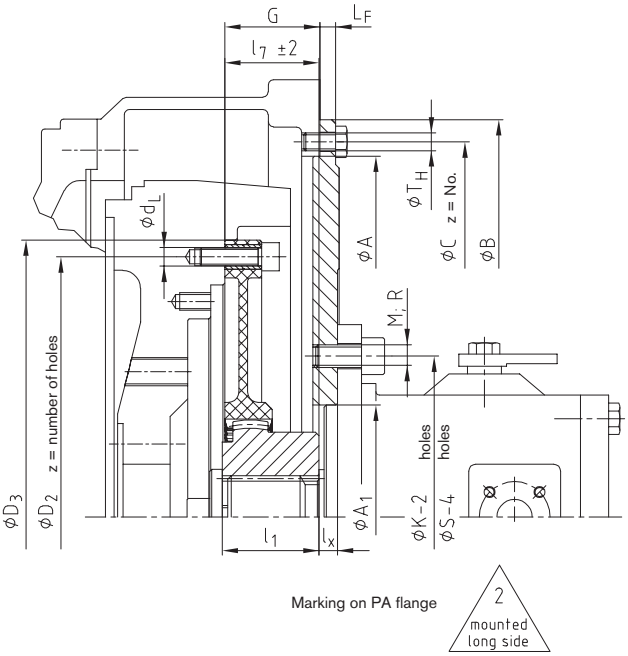

Spline hub

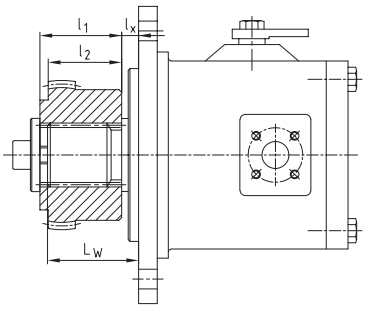

Clamping hub

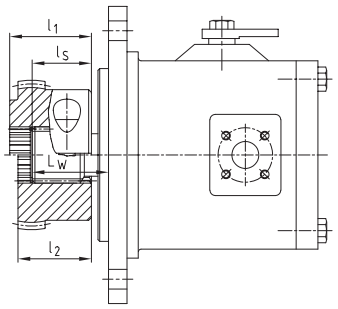

Determination of mounting length l3 or l7	
SAE-Shaft	$l_3 / l_7 = G + L_F - L_W + l_S$
DIN-Shaft	$l_3 / l_7 = G + L_F - l_X$

If axial fixing of the hub by means of an end plate and a screw is not possible for a pump shaft with involute spline, we would recommend to use our clamping hub.

Mounting instructions:
The flange can be fastened to the engine flywheel by means of socket head cap screws according to DIN EN ISO 4762 quality 8.8 or by hexagon head screws quality 8.8. We recommend screws are loctited in position.

Screw tightening torque of FLE-PA flange to flywheel	
M8	25 Nm
M10	49 Nm
M12	86 Nm

Screw tightening torque of spline clamping hubs DIN EN ISO 4762		
42/48	M10	49 Nm
T55/65/T70	M12	86 Nm
80/100/125	M16	210 Nm

Mounting dimensions according to SAE standard

1. Selection of coupling for diesel engine

ⓧ	Diesel engine power		Coupling size	Flywheel to SAE			Pump mounting flange			Driving shaft of pump
	kW	HP			G			LF		
	bis 30 kW	bis 40 PS	48 FLE-PA	6 1/2"	30,15	1,19"	For dimensions to SAE see tables 3 and 4			See table 3 Hub design SAE J 498 / DIN 5480
				7 1/2"	30,15	1,19"				
				8"	62	2,44"		9,5	0,375"	
				10"	54	2,12"				
	bis 90 kW	bis 120 PS	65 FLE-PA	8"	62	2,44"				
				10"	54	2,12"		9,5	0,375"	
				11 1/2"	39,6	1,56"		12,7	0,5"	
	bis 180 kW	bis 240 PS	80 FLE-PA	11 1/2"	39,6	1,56"		12,7	0,5"	

2. Dimensions of coupling flange acc. to SAE J 620 [mm]

ⓧ	Size	D_3	D_2	z=number	d_L
	6 1/2"	215,90	200,02	6	9
	7 1/2"	241,30	222,25	8	9
	8"	263,52	244,47	6	11
	10"	314,32	295,27	8	11
	11 1/2"	352,42	333,37	8	11

4. Housing dimensions according to SAE 617 [mm]

ⓧ	SAE size	A	B	C	Z	TH	
	SAE-1	511,18	552	530,2	12	M10	3/8"
	SAE-2	447,68	489	466,7	12	M10	3/8"
	SAE-3	409,58	451	428,6	12	M10	3/8"
	SAE-4	361,95	403	381,0	12	M10	3/8"
	SAE-5	314,33	356	333,4	8	M10	3/8"

5. Mounting flange for hydraulic pump acc. to SAE [mm]

ⓧ	SAE size	SAE flange with 2 holes					SAE flange with 4 holes				
		A_1	K-2	M		Z	A_1	S-4	R		Z
	A	82,55	106,4	M10	3/8"	2	82,55	104,6	M10	3/8"	4
	B	101,6	146,0	M12	1/2"	2	101,6	127,0	M12	1/2"	4
	C	127,0	181,0	M16	5/8"	2	127,0	162,0	M12	1/2"	4
	D	152,4	228,6	M16	5/8"	2	152,4	228,6	M16	5/8"	4
	E	-	-	-	-	-	165,1	317,5	M20	3/4"	4

BoWex® coupling size	Pump shaft to SAE J 498 and DIN 5480	Spline hub	Spline clamping hub	Dimensions of coupling hub [mm]			Mounting lenght of coupling l3 or l7								Code to order coupling hub
							Flange size 6 1/2" and 7 1/2"		Flange size 8"		Flange size 10"		Flange size 11 1/2"		
							K	L	K	L	K	L	K	L	Specify coupling size
				l_1	l_2	l_S	l_3	l_7	l_3	l_7	l_3	l_7	l_3	l_7	
42	SAE-16/32 DP		x	42	-	33	33	42							P559101
	PI-S 3/4"														
	z=11														
42	SAE-16/32 DP		x	42	-	-	33	42							P567101
	PB-S 7/8"														
	z=13														
42	SAE-16/32 DP		x	42	-	27	33	42							P660201
	PB-BS 1"														
	z=15														
48	SAE-16/32 DP		x	50	-	45	41	50		50	41	50			P663301
65	PA-S 1 3/8"		x	50	-	48				54	45	54	41		P663301
	z=21														
65	SAE-12/24 DP		x	55	-	44				54	45	54	41		P656201
	PC-S 1 1/4"														
	z=14														
65	SAE-16/32 DP		x	-	49	45						53	41		P664301
	PD-S 1 1/2"														
	z=23														
80	SAE-16/32 DP		x	55	-	-							44	33	P565402
	PE-S 1 3/4"														
	z=27														
42	25 x 1,25 x 18 DIN 5480	x		42	-	-	33	42							P000205
42			x	42	-	-	33	42							P500202
42	30 x 2 x 14 DIN 5480		x	42	-	-	33	42							P500203
48		x		50	-	-	41	50							P000206
48			x	50	-	-	41	50		50		50			P500203
48	35 x 2 x 16 DIN 5480	x		46	-	-	37	46							P000303
65		x		55	-	-						54	39		P000303
65			x	60	-	-			50	59	50	59	39		P500301
65	40 x 2 x 18 DIN 5480	x		55	-	-						54	39		P000304
65			x	55	-	-				54	45	54	39		P500302
65	45 x 2 x 21 DIN 5480	x		-	64	-			60	69	60	69	39		P000403
65			x	55	-	-				54	45	54	39		P500401
80	50 x 2 x 24 DIN 5480		x	55	-	-							42	37	P500405

Ordering example: Coupling FLE-PA / FLE PAC			SAE pump mounting flange	
BoWex® 48 FLE-PA	7 1/2"	P663301	SAE-4	B-2L
Coupling size	SAE connection of coupling	Code of coupling hub	Pump mounting flange for engine housing	Pump flange to SAE 2 holes/4 holes standard metric fastening thread
Table 1	Table 2	Table 3	Table 4	Table 5

Special flange programme, deviations from the SAE standard

Fitting to: Hatz diesel engines

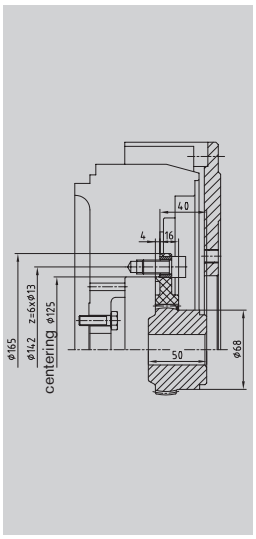

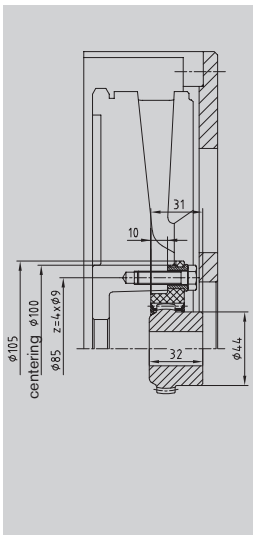

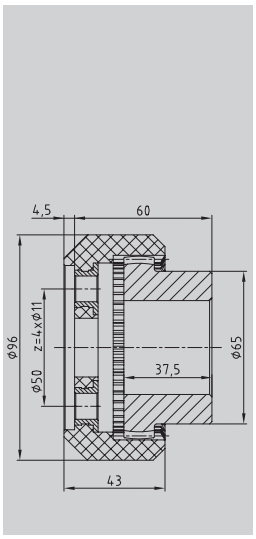

Coupling size	BoWex® 48 FLE-PA, Ø165	BoWex® 28 FLE-PA, Ø105	BoWex® 48 FLE-PA, Ø96
Engine type	Hatz 2L/3L/4L41C 2M/3M/4M41 4.M42,4L42C	Hatz 1.D81 / 1D90	Hatz Z788 / Z789 / Z790

Fitting to: VW Mitsubishi diesel engines

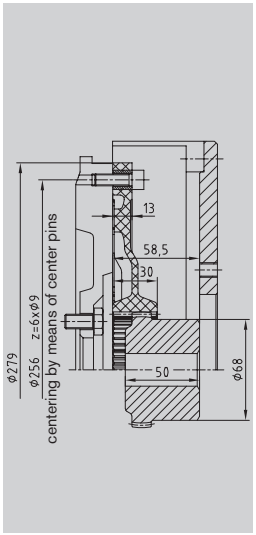

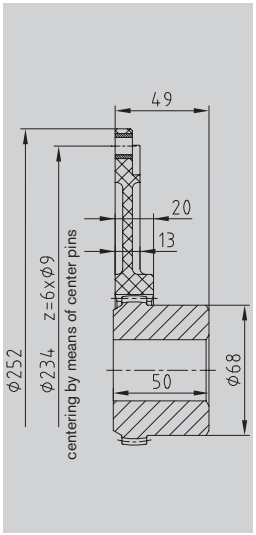

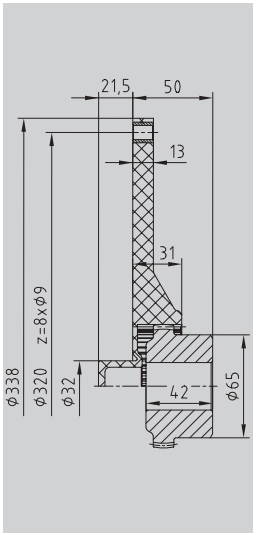

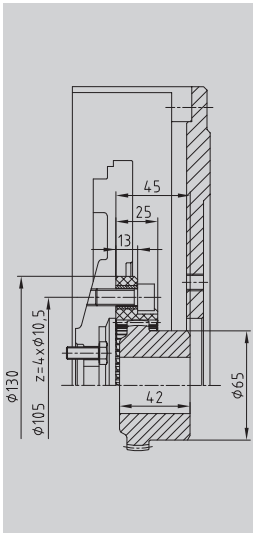

Coupling size	BoWex® 48 FLE-PA, Ø279	BoWex® 48 FLE-PA, Ø252	BoWex® 48 FLE-PA	BoWex® 48 FLE-PA, Ø130
Engine type	VW 028.B / M344	VW 062.2 / 068.5 / 6 / A / D	Mitsubishi Ø338-32	Mitsubishi Series L / Series K

Fitting to: Perkins Lombardini diesel engines

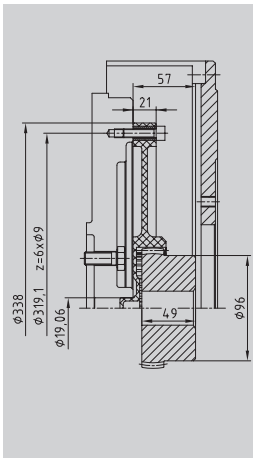

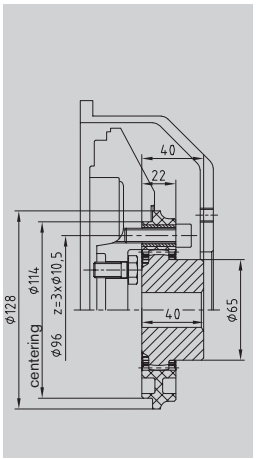

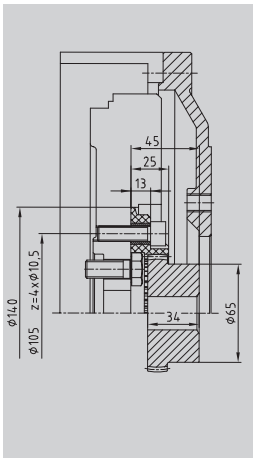

Coupling size	BoWex® 65 FLE-PA, Ø338	BoWex® 48 FLE-PA, Ø128	BoWex® 48 FLE-PA, Ø140
Engine type	Perkins 1104C-44T Flywheel No. D0014	Lombardini FOCS series	Lombardini LDW

BoWex® FLE-PA
Torsionally rigid flange couplings

Special flange programme, deviations from the SAE standard

Fitting to:
Perkins
Isuzu
Cummins
diesel
engines

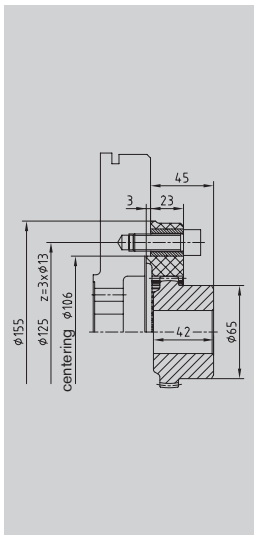

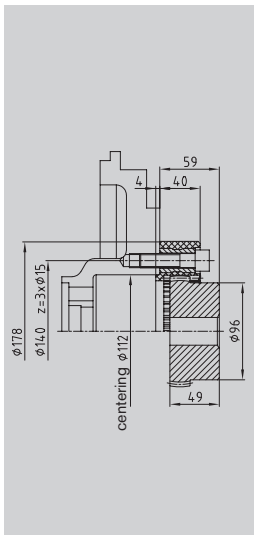

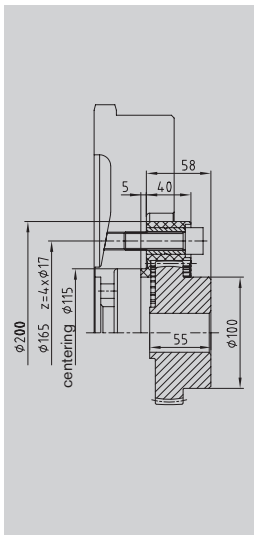

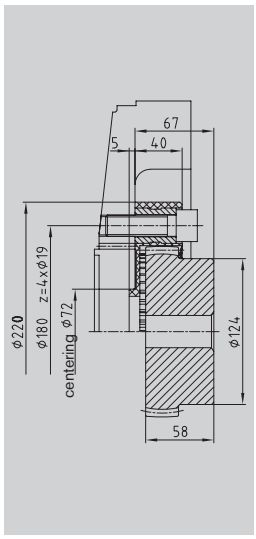

Coupling size	BoWex® 48 FLE-PA, Ø 155	BoWex® 65 FLE-PA, Ø 178	BoWex® 70 FLE-PA, Ø 200	BoWex® 80 FLE-PA, Ø 220
Engine type	3 holes, Ø 125	3 holes, Ø 140	4 holes, Ø 165	4 holes, Ø 180

Fitting to:
Caterpillar
Daimler
Cummins
John-Deere
diesel engines

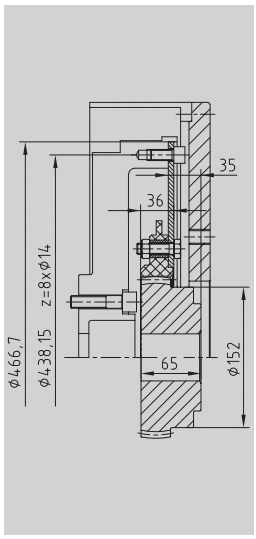

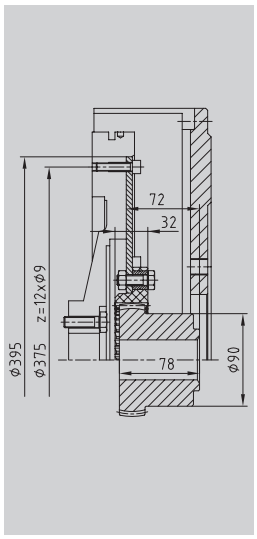

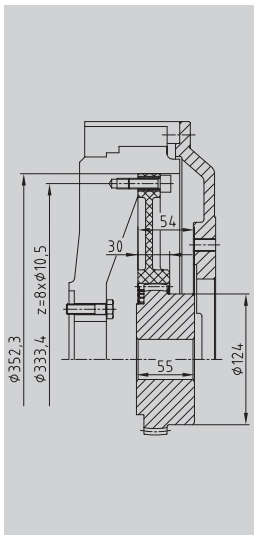

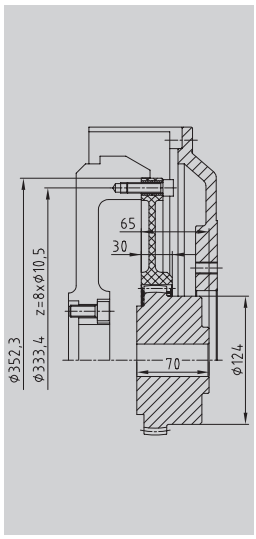

Coupling size	BoWex® T100 FLE-PA, 14”	BoWex® T65 FLE-PA, Ø395	BoWex® 80 FLE-PA, 11 1/2”	BoWex® 80 FLE-PA 11 1/2”
Engine type	Caterpillar C 10 / C 12	Daimler OM904	Cummins QSX/QSB	John Deere

Fitting to
shaft motors:
Hatz
Honda
Briggs-Stratton
Yanmar
Kohler
Robin

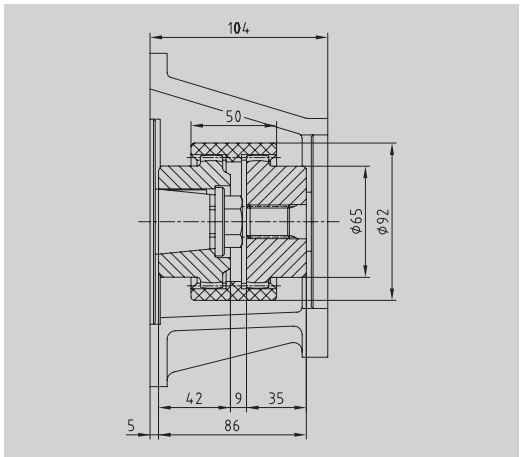

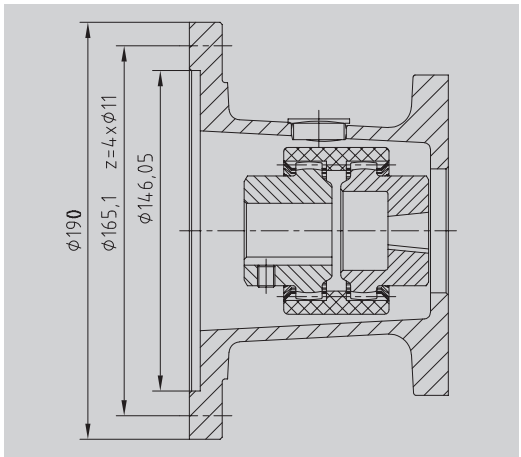

Coupling size	BoWex® M42	BoWex® shaft coupling type M28 and M32
Engine type	Hatz 2G30	Housing connection acc. to SAE J609A

BoWex® FLE-PA
Torsionally rigid flange couplings and pump mounting flanges

Flange couplings and pump connection housings for KUBOTA engines

KUBOTA
Super MINI series

Z-400
Z-442-B
Z-482-B
D-600
D-662-B
D-902-B
V-800

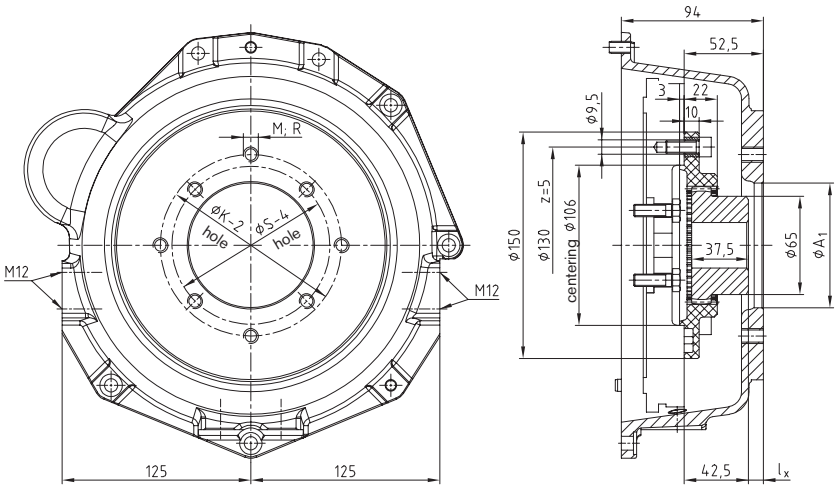

BoWex® 48 FLE-PA Ø 150 / pump connection housings

KUBOTA
Super 3 series

D 1403/1703
flywheel
No. 190027991

V 1903/2203
flywheel
No. 190002369

V 2003-T

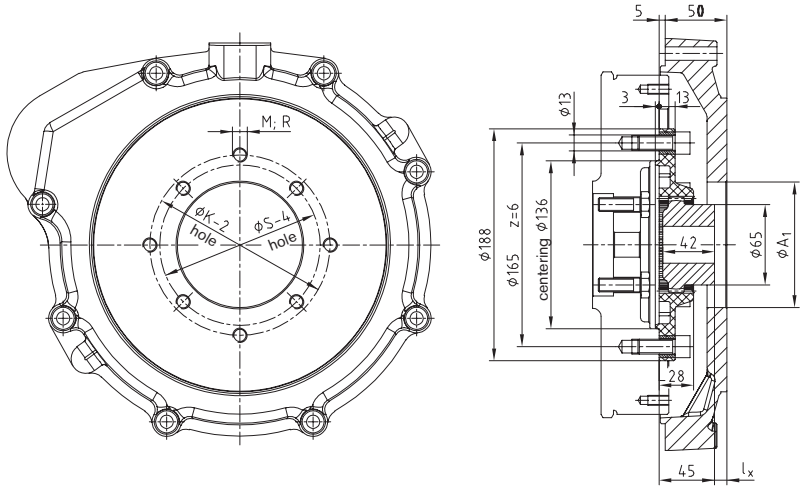

BoWex® 48 FLE-PA Ø 188 / pump connection housings

KUBOTA
Super 5 series

D 905
D 1005
D 1105
D 1105-T
V 1205
V 1305
V 1505

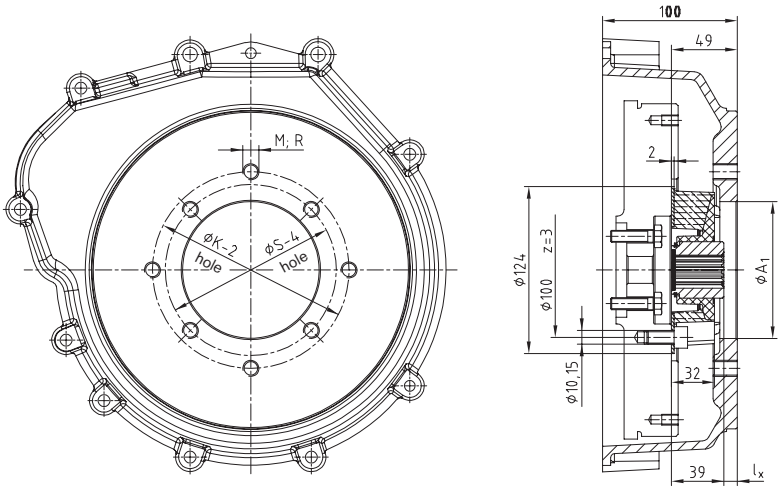

MONOLASTIC® 28 Ø 124 / pump connection housings

BoWex® FLE-PA
Torsionally rigid flange couplings and pump mounting flanges

Flange couplings and pump connection housings for Perkins engines

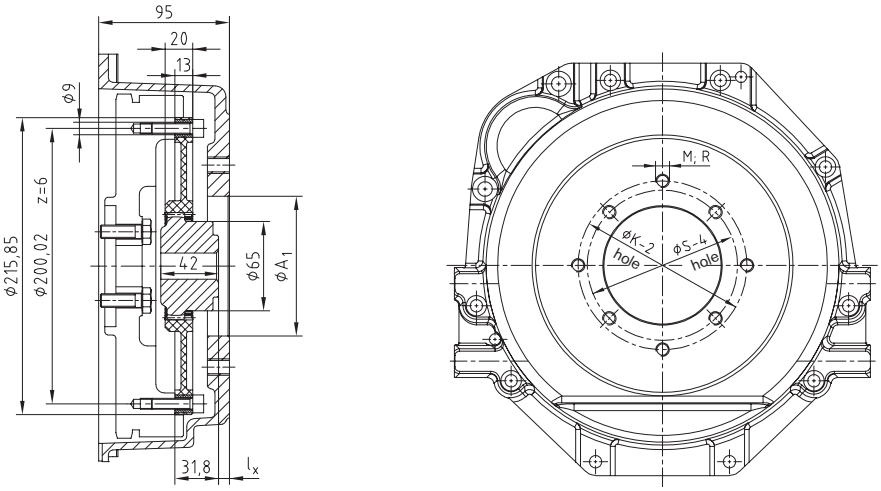

Perkins 403D - 10/11

Perkins 403D - 13/15

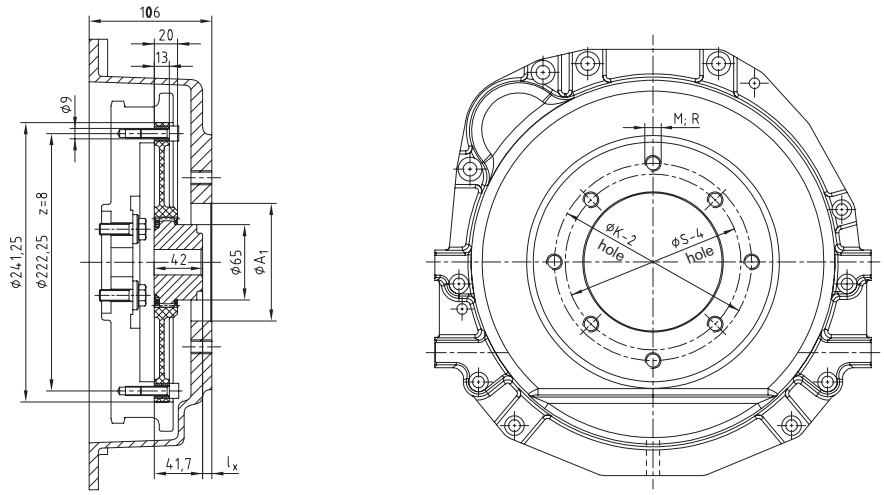

Perkins 404D - 20

Perkins 404D - 22

Other selections on request for Yanmar Mitsubishi etc.

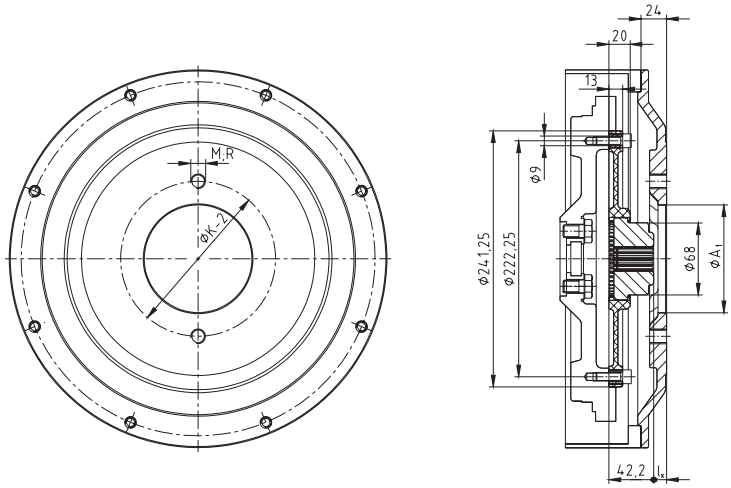

Mitsubishi SL series

Yanmar TNV series

BoWex® FLE-PA
Torsionally rigid flange couplings and pump mounting flanges

Selection of DEUTZ engines FL/M 1011 and FL/M 2011, TCD/TD/D 2.9 L4, TDC/T 3.6 L

Anbaukombination A

Antrieb: Hydraulikpumpen
BoWex® 48 FLE-PA 6 1/2"
SAE-4.0/33 Pumpenanbauflansch

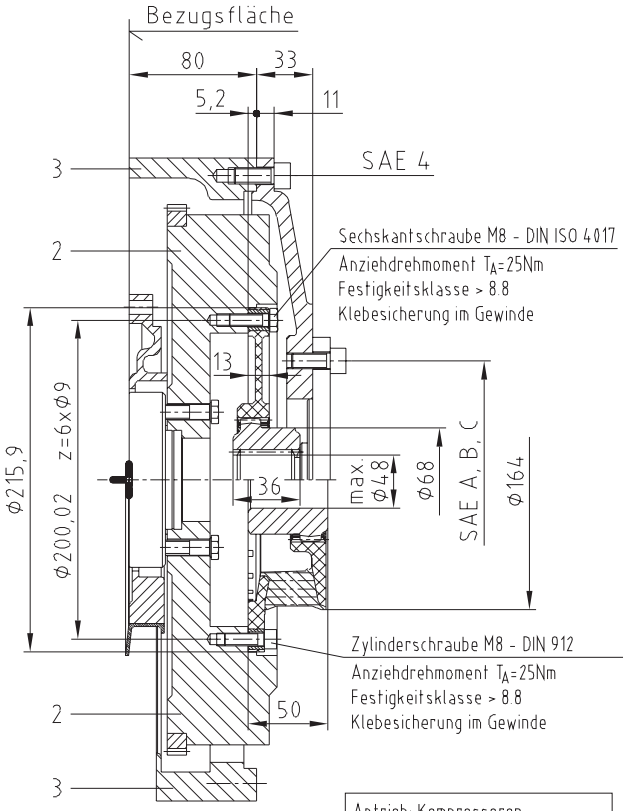

Anbaukombination B

Antrieb: Kompressoren, Wasserpumpen usw.
BoWex-Elastic® HE 6 1/2"

Anbaukombination C

Antrieb: Hydraulikpumpen
BoWex® 48 FLE-PA 8"
SAE-4.3/24 Pumpenanbauflansch

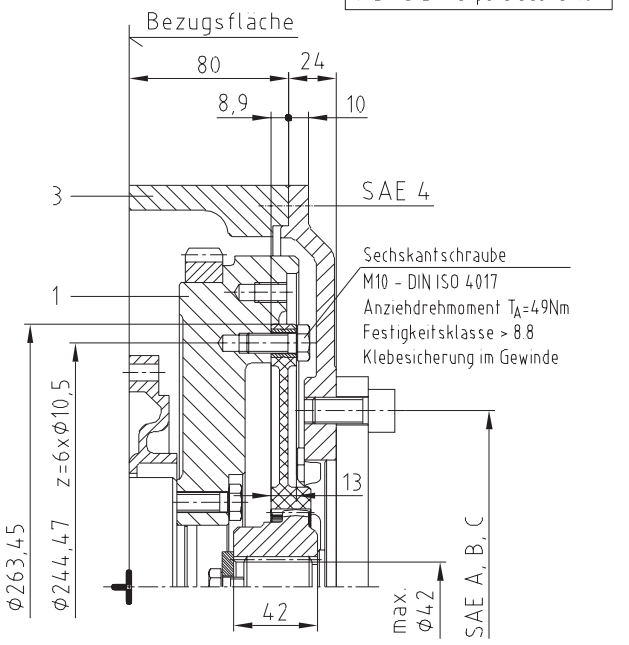

Anbaukombination D

Antrieb: Hydraulikpumpen
BoWex® T55 FLE-PA 8"
SAE-4.0/38 Pumpenanbauflansch

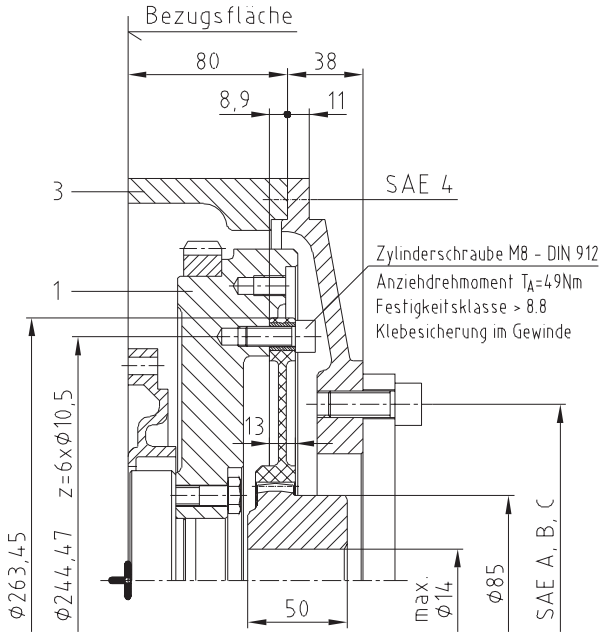

ACHTUNG: Entsprechend der Motorleistung ist die Kupplungsanordnung durch den Anwender zu prüfen. Nach erfolgtem Kupplungsanbau Kurbelwellenlängsspiel prüfen. Sollmaß für Lagerluft 0,1 ... 0,3 mm.
DEUTZ übernimmt keine Haftung für außerhalb des DEUTZ Lieferumfanges liegende Maßgaben und/oder Teile.

Bei techn. Rückfragen hinsichtlich der Kupplungsausführung wenden Sie sich bitte an:
KTR-Kupplungstechnik GmbH
Postfach 1763 D-48407 Rheine
Telefon +49 - 05971 / 798-0

D	C	B	A	Pos.	Benennung	Nummer	G(kg)	Baus.-Nr.
1	1	1	1	3	Zwischengehäuse (SAE-4)	0427 0980 KZ 0138-52 0417 1040 UA 0138-52	15	0553
-	-	1	1	2	Schwungrad (SAE 6 1/2") J= 0,499 kgm²	0428 0586 KZ 0138-05 0417 1301 UA 0138-05	30,3	3174
1	1	-	-	1	Schwungrad (SAE 8 u.10") J= 0,405 kgm²	0427 2426 KZ 0138-05 0417 1301 UA 0138-05	25,3	2461

Anbau-kombination

UNLESS OTHERWISE SPECIFIED
DIMENSIONS ARE IN MILLIMETERS | CORNERS PER DIN 6784 | GEOMETRIC TOLERANCES PER ISO 1101 GENERAL TOLERANCES - | SURFACE TEXTURE PER ISO 1312 IN MICROMETERS | MATERIAL | PROJECTION METHOD

Bauart TYPE FL/M1011 FL/M2011 | Werkstückkanten nach DIN 6784 -0,3 +0,4 | Form- und Lagetoleranzen nach DIN 7184 Allgemeintoleranzen - | Oberflächen Angaben nach ISO 1312 Rz nach DIN 6784 | Maßstab SCALE 1:1 | Gewicht WEIGHT - | Werkstoff Rohteil-Nr. BLANK NO. - | ISO 128 Darstellungs-Methode

	Datum	Name
Bearb.	17.12.13	Sha
Gepr.	12.02.13	Sh
Norm		
OE DEPT.		Ges.

Benennung TITLE: Kupplungsanbau BoWex® FLE-PA / ELASTIC HE

DEUTZ AG

Teilnummer Nach-, Identnummer EPN: 0428 0967 | Chg. Ind. U,B | Techn. Ordnungsnummer: 0138-97 | Blatt SHEET 1 von 1 Bl.

Mar. | Zeit | Änderung REVISION | Dat./Na. | Gepr. | Urspr. ORIGIN. | Ers. fr. REPLACES.

BoWex® FLE-PA
Torsionally rigid flange couplings and pump mounting flanges

Selection of DEUTZ engines BFM 1012/1013/2012/2013/1015

Anbaukombination A

BoWex® 65 FLE-PA 10"
SAE-4/9 Pumpenanbauflansch

Deutz-Motor
BF4/6M 1012/2012, BF4/6 1013/2013,
TCD/TD 2012 L04/06 2V/4V, TCD/TD 2013 L04 2V, TCD 4.1 L4

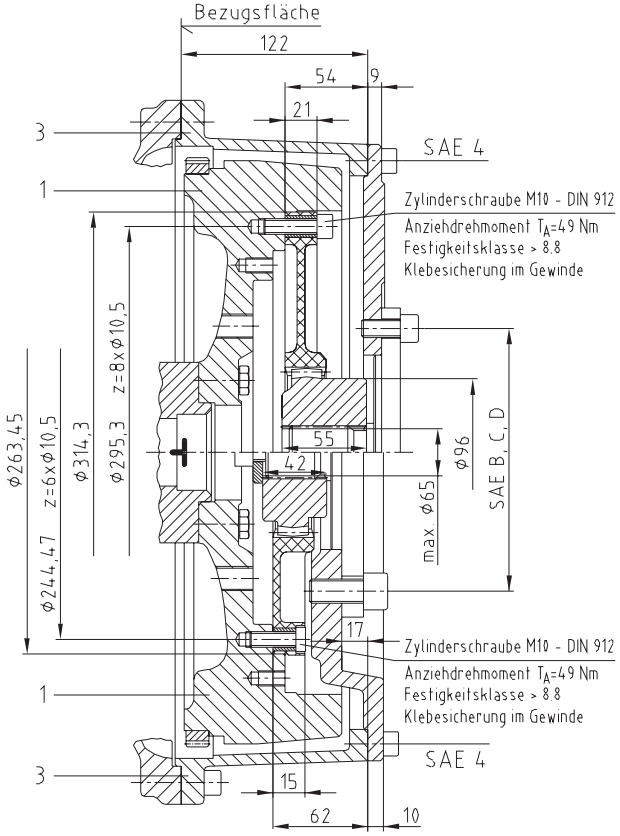

Anbaukombination B

BoWex® 65 FLE-PA 8"
SAE-4 2/-17 Pumpenanbauflansch

Deutz-Motor
BF4/6M 1012/2012, BF4/6 1013/2013,
TCD/TD 2012 L04/06 2V/4V, TCD/TD 2013 L04 2V, TCD 4.1 L4

Anbaukombination C

BoWex® 80 FLE-PA 11 1/2"
SAE-3/9 Pumpenanbauflansch

Deutz-Motor
BF4/6M 1012/2012, BF4/6 1013/2013,
TCD/TD 2012 L04/06 2V/4V, TCD/TD 2013 L04/06 2V, TCD 4.1 L4, TCD 6.1 L6

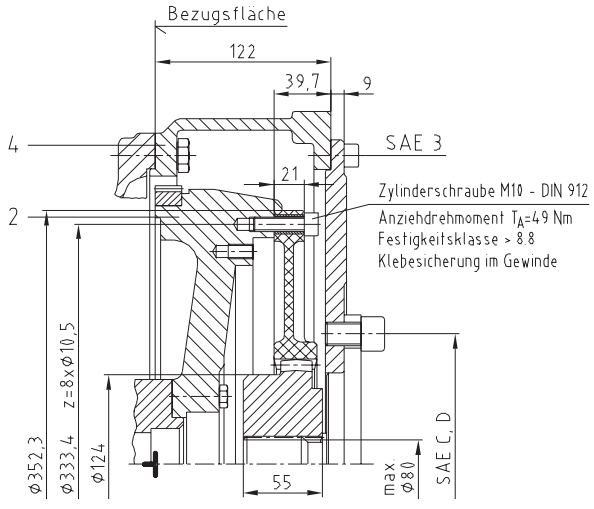

Anbaukombination D

BoWex® 100 FLE-PA 14"
SAE-1/20 Pumpenanbauflansch

Deutz-Motor
BF6/8M 1015/2015,
TCD 2015 V06, TCD 12.0 V6

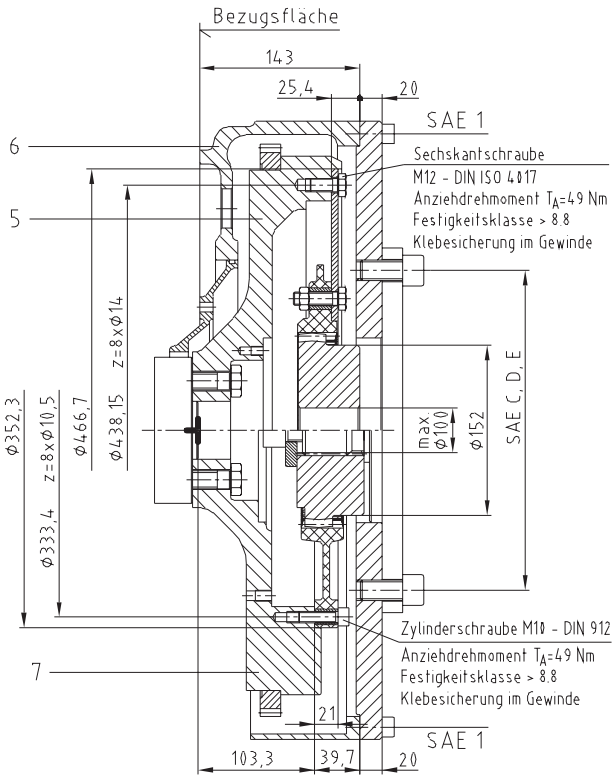

Anbaukombination E

BoWex® 100 FLE-PA 11 1/2"
SAE-1/20 Pumpenanbauflansch

Deutz-Motor
BF6/8M 1015/2015,
TCD 2015 V06, TCD 12.0 V6

ACHTUNG: Entsprechend der Motorleistung ist die Kupplungsanordnung durch den Anwender zu prüfen. Nach erfogtem Kupplungsanbau Kurbelwellenlängsspiel prüfen. Sollmaß für Lagerluft: Motor 1012/1013/2012/2013 = 0,1 - 0,28 mm; Motor 1015 = 0,2 - 0,4 mm
DEUTZ übernimmt keine Haftung für außerhalb des DEUTZ Lieferumfanges liegende Maßgaben und/oder Teile.

Bei techn. Rückfragen hinsichtlich der Kupplungsausführung wenden Sie sich bitte an:
KTR-Kupplungstechnik GmbH; Postfach 1763; D-48407 Rheine; Tel.: 05971/798-0

E	D	C	B	A	Pos.	Benennung	Nummer	G (kg)	Baus.-Nr.
1	-	-	-	-	7	Schwungrad (SAE-11 1/2") J= 2,255 kgm²		66,7	
1	1	-	-	-	6	Anschlußgehäuse (SAE-1)		45,6	
-	1	-	-	-	5	Schwungrad (SAE-14") J= 2,264 kgm²		61,6	
-	-	1	-	-	4	Anschlußgehäuse (SAE-3)			
-	-	-	1	1	3	Anschlußgehäuse (SAE-4)			
-	-	1	-	-	2	Schwungrad (SAE-10 u. 11 1/2") J= 0,872 kgm²			
-	-	-	1	1	1	Schwungrad (SAE-8 u. 10") J= 1,03 kgm²			

Anbau-kombination

DEUTZ 1012 / 1013
siehe 0420 8900 UB 0130-97

Type with 3 holes (EP 0853203/U.S. Patent 6,117,017)

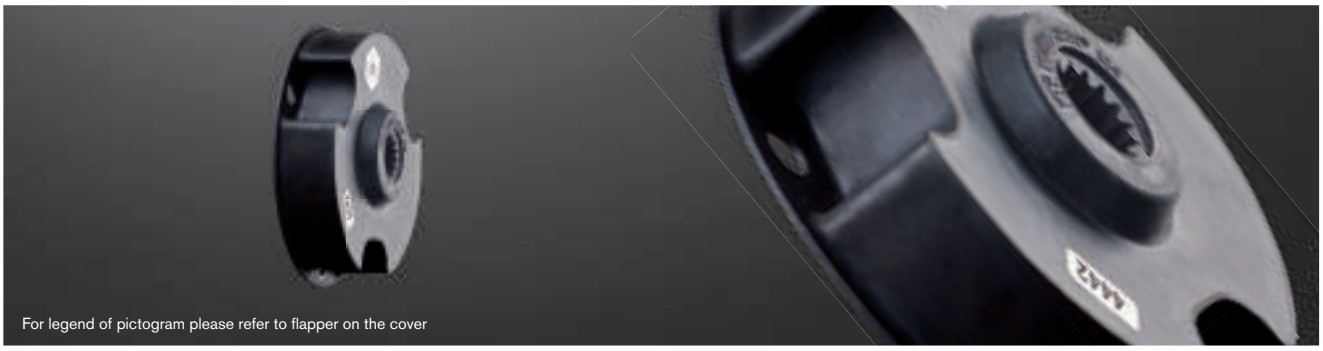

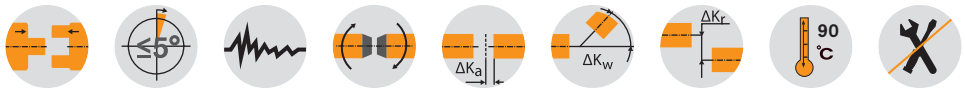

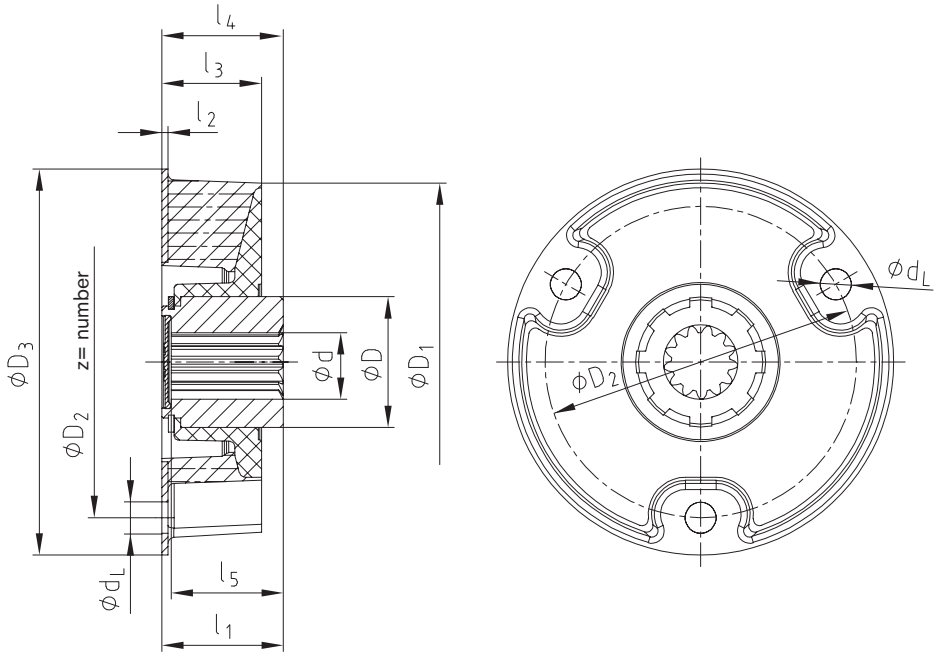

MONOLASTIC®																
Size	Elastomer hardness [Shore A]	Torque [Nm]			Dimensions [mm]											
		T_{KN}	$T_{K\,max.}$	T_{KW}	d	D	D_1	D_2	z	d_L	D_3	l_1	l_2	l_3	l_4	l_5
22	65	40	100	20	20	34	93	80	3	8,10	100	33	1,5	32	34	30
28	65	70	175	35	25	42	115	100	3	10,10	124	40	2	32	40	38
	70	100	300	50												
32	65	160	400	80	32	50	140	125	3	12,10	150	42	2	42	43	38
	70	225	675	112												
50-140	70	260	650	130	32	50	167	140	3	14,10	175	46	3	35	46	43
50-165	70	300	750	150	32	50	175	165	3	16,15	200	46	3	35	46	43
50-170	70	300	750	150	32	50	175	170	3	16,15	200	46	3	35	46	43
60-165	70	400	1000	200	48	68	191	165	3	16,15	205	50	3	40	55	46

Technical data								
Size	Elastomer hardness [Shore A]	Cdyn. with 60 °C [Nm/rad]	Perm. damping power with 60 °C PKW [W]	Max. displacement with 2200 rpm ΔKr [mm]	Perm. angular displacement with 2200 rpm ΔKw [°]	Radial spring stiffness Cr [N/mm]	Mass moment of inertia [kgm²]		Max. perm. operating speed $n_{max.}$ [rpm]
							J_A	J_L	
22	65	600	10	0,6		200	0,00017	0,00010	6000
28	65	900	15	0,6		300	0,00054	0,00033	6000
	70	1300		0,5		400			
32	65	1800	25	0,6		400	0,00120	0,00081	6000
	70	2400		0,5	1	500			
50-140	70	4200	35	0,5		1365	0,00210	0,00130	6000
50-165		5600	40	0,5		1550	0,00250	0,00130	6000
50-170									
60-165	70	7800	40	0,5		1500	0,00599	0,00358	6000

Type SAE (EP 0853203/U.S. Patent 6,117,017)

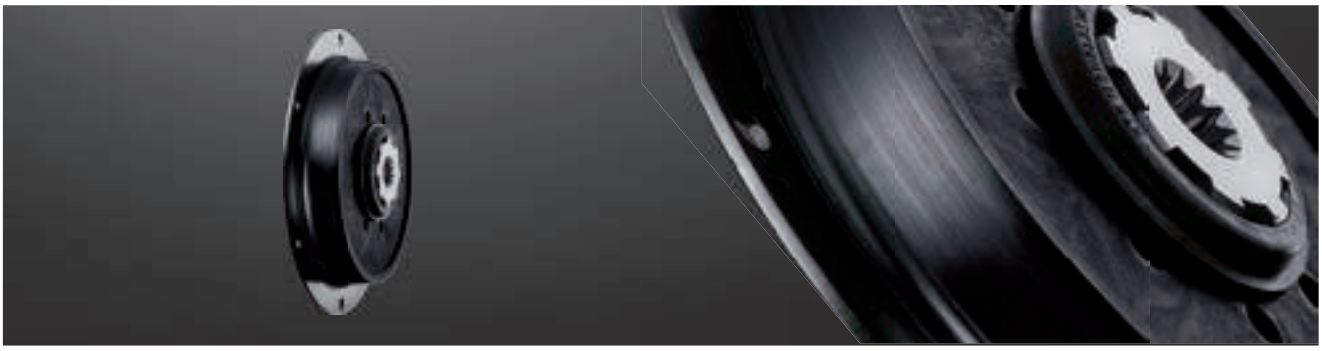

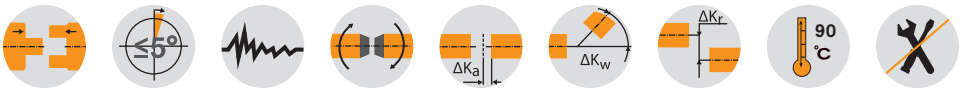

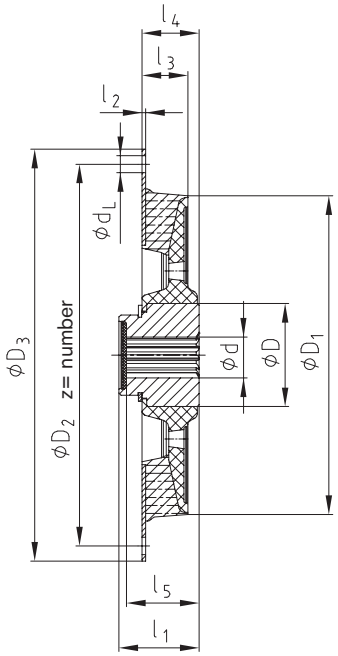

Flange dimensions acc. to SAE J 620 [mm]

Size	D_3	D_2	z	d_L
6 ½"	215,9	200,02	6	9
7 ½"	241,3	222,25	8	9
8"	263,52	244,47	6	11
10"	314,32	295,27	8	11
11 ½"	352,42	333,37	8	11

MONOLASTIC®

Size	Elastomer hardness [Shore A]	Torque [Nm]			Dimensions [mm]								MONOLASTIC® flanges according to SAE				
		T_{KN}	$T_{K\,max.}$	T_{KW}	d	D	D_1	l_1	l_2	l_3	l_4	l_5	6 ½"	7 ½"	8"	10"	11 ½"
30	65	160	400	80	25	42	120	39	2	21	30	36	X	X			
	70	200	500	100													
50	65	300	750	150	32	50	167	42	2	24	30	38	X	X	X	X	
	70	400	1000	200													
G50	70	550	1375	275	32	50	178	42	2	24	36	38		X	X	X	
65	65	600	1500	300	48	68	200	45	3	32	45	42				X	X
	70	800	2000	400													
75	65	1200	3000	600	60	90	265	58	3	35	50	54				X	X
	70	1500	3750	750													

Technical data

Size	Elastomer hardness [Shore A]	Cdyn.with 60 °C [Nm/rad]	Perm. damping power with 60 °C PKW [W]	Max. displacement with 2200 rpm ΔKr [mm]	Perm. angular displacement with 2200 rpm ΔK_W [°]	Radial spring stiffness Cr [N/mm]	Mass moment of inertia [kgm²]			Max. permissible operating speed nmax. [rpm]
								J_A	J_L	
30	65	3750	25	0,5	1	1150	6,5"	0,0038	0,00030	6000
	70	4875				1500	7,5"	0,0057		
50	65	9000	35	0,5	1	1300	8"	0,0078	0,00120	6000
	70	12000				1700	10"	0,0153		
G50	70	17500	40	0,5	1	1910	7 ½"	0,0060	0,00120	6000
							8"	0,0080		
							10"	0,0162		
65	65	14000	45	0,5	1	1900	10"	0,0238	0,00380	6000
	70	18000				2450	11,5"	0,0368		
75	65	34000	80	0,5	1	1850	10"	0,0272	0,01450	6000
	70	42000				2400	11,5"	0,0402		

Examples of installation for type with 3 holes (EP 0853203/U.S. Patent 6,117,017)

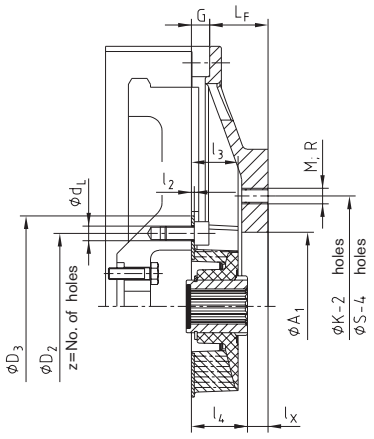

MONOLASTIC® 28
with spline shaft

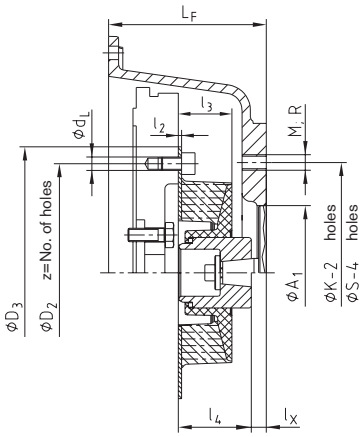

MONOLASTIC® 28
with taper shaft

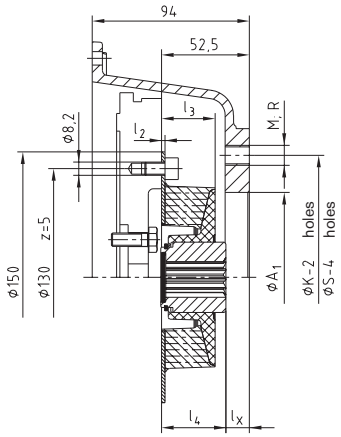

MONOLASTIC® 28
KUBOTA - Mini

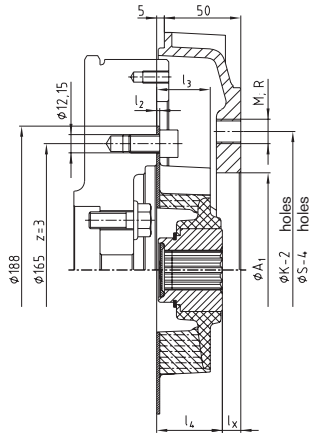

MONOLASTIC® 32 - 188
KUBOTA Super Three Series

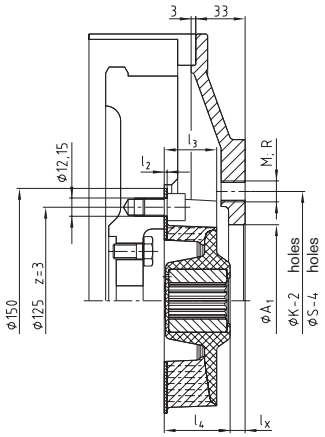

MONOLASTIC® 32 S

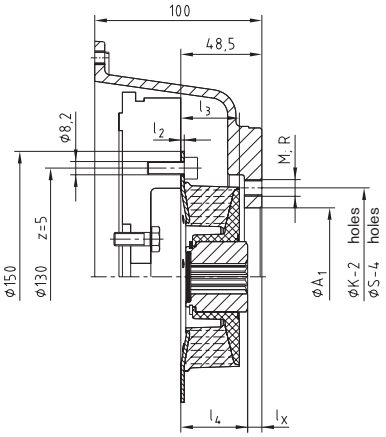

MONOLASTIC® 28
KUBOTA Super Mini

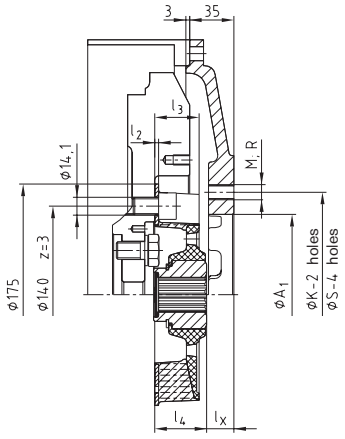

MONOLASTIC® 50 - 140

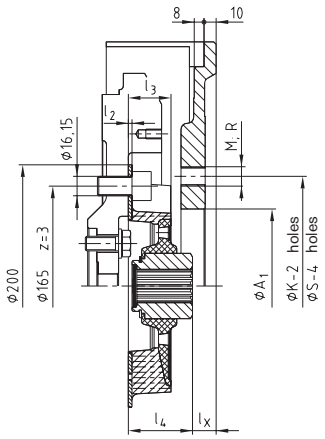

MONOLASTIC® 50 - 165

Examples of installation for SAE type (EP 0853203/U.S. Patent 6,117,017)

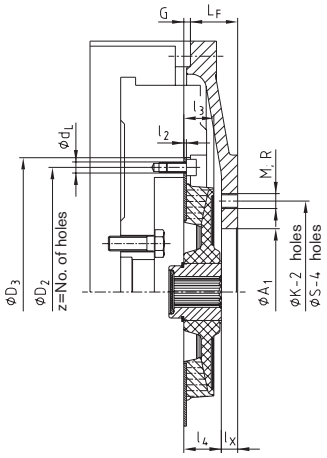

MONOLASTIC® 30
with spline shaft

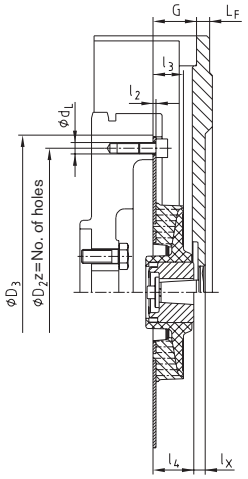

MONOLASTIC® 30
with taper shaft

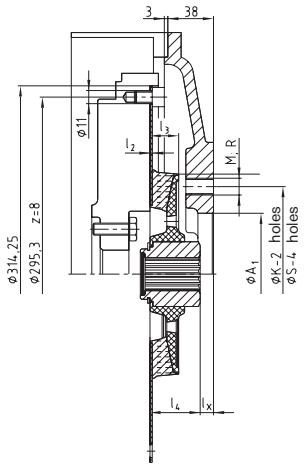

MONOLASTIC® 50 - 10“

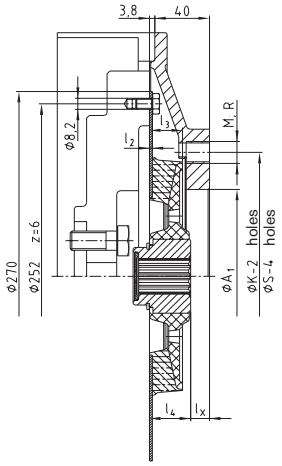

MONOLASTIC® 50 - 270
KUBOTA engine
D1803, V2403, V2403T

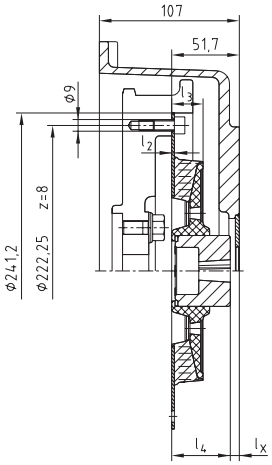

MONOLASTIC® 50
Perkins-engine
403-13/403-15

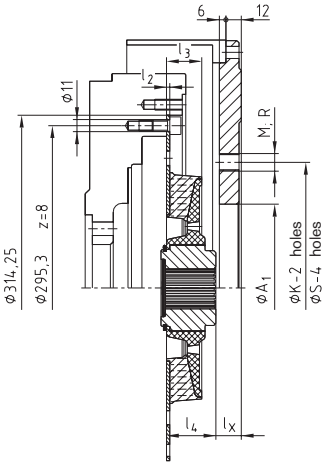

MONOLASTIC® 65 - 10“

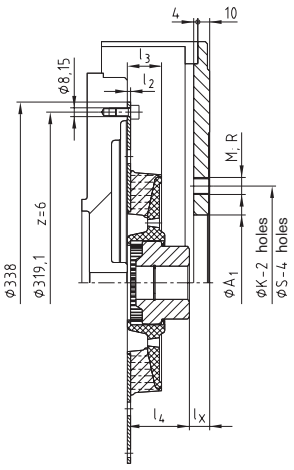

MONOLASTIC® 65 / T48

Technical data and displacements

Technical data													
Size	Shore	Torque [Nm]			Perm. damping power P_{KW} [W]			Perm. operating speed $n_{max.}$ [rpm]	Dynamic torsion spring stiffness $C_{dyn.}$ [Nm/rad]	Relative damping ψ	Resonance factor $V_R \approx 2 \bullet \pi / \psi$	Radial spring stiffness Cr [N/mm]
		T_{KN}	$T_{K\ max.}$	bei 10 Hz T_{KW}	60 °C	80 °C	90 °C					
42 HE	T40 Sh	130	390	39	26	13	6,5	6200	550	0,6	10,5	142
	T50 Sh	150	450	45					850	0,8	7,9	219
	T65 Sh	180	540	54					2700	1,2	5,2	697
	40 Sh*	130	390	39	20	6,5	–		550	0,6	10,5	142
	50 Sh*	150	450	45					850	0,8	7,9	219
	65 Sh*	180	540	54					2700	1,2	5,2	697
48 HE	T40 Sh	200	600	60	36	18	9	5600	850	0,6	10,5	176
	T50 Sh	230	690	69					1300	0,8	7,9	269
	T65 Sh	280	840	84					3500	1,2	5,2	724
	40 Sh*	200	600	60	27	9	–		850	0,6	10,5	176
	50 Sh*	230	690	69					1300	0,8	7,9	269
	65 Sh*	280	840	84					3500	1,2	5,2	724
65 HE	T40 Sh	350	1050	105	60	30	15	4500	1600	0,6	10,5	209
	T50 Sh	400	1200	120					2200	0,8	7,9	288
	T65 Sh	500	1500	150					6000	1,2	5,2	784
	40 Sh*	350	1050	105	45	15	–		1600	0,6	10,5	209
	50 Sh*	400	1200	120					2200	0,8	7,9	288
	65 Sh*	500	1500	150					6000	1,2	5,2	784
G 65 HE	T40 Sh	430	1290	129	68	34	17	4300	2350	0,6	10,5	259
	T50 Sh	500	1500	150					3000	0,8	7,9	346
	T65 Sh	620	1860	186					8500	1,2	5,2	975
	40 Sh*	430	1290	129	51	17	–		2350	0,6	10,5	259
	50 Sh*	500	1500	150					3000	0,8	7,9	346
	65 Sh*	620	1860	186					8500	1,2	5,2	975
GG65 HE	T40 Sh	600	1800	180	76	38	19	4000	3650	0,6	10,5	240
	T50 Sh	700	2100	210					4800	0,8	7,9	324
	T65 Sh	850	2550	255					13500	1,2	5,2	911
80 HE	T40 Sh	750	2250	225	120	60	30	3600	4500	0,6	10,5	351
	T50 Sh	950	2850	285					6500	0,8	7,9	507
	T65 Sh	1200	3600	360					18000	1,2	5,2	1404
	40 Sh*	750	2250	225	90	30	–		4500	0,6	10,5	351
	50 Sh*	950	2850	285					6500	0,8	7,9	507
	65 Sh*	1200	3600	360					18000	1,2	5,2	1404
G 80 HE	T40 Sh	1250	3750	375	180	90	45	3000	7500	0,6	10,5	476
	T50 Sh	1600	4800	480					12000	0,8	7,9	762
	T65 Sh	2000	6000	600					32000	1,2	5,2	2031
	40 Sh*	1250	3750	375	135	45	–		7500	0,6	10,5	476
	50 Sh*	1600	4800	480					12000	0,8	7,9	762
	65 Sh*	2000	6000	600					32000	1,2	5,2	2031
GG80 HE	T40 Sh	1550	4650	465	196	98	49	3000	9200	0,6	10,5	395
	T50 Sh	2000	6000	600					14200	0,8	7,9	635
	T65 Sh	2500	7500	750					39600	1,2	5,2	1650
100 HE	T40 Sh	2000	6000	600	212	106	53	2700	12000	0,6	10,5	366
	T50 Sh	2500	7500	750					19000	0,8	7,9	570
	T65 Sh	3200	9600	960					48000	1,2	5,2	1200
	40 Sh*	2000	6000	600	160	53	–		12000	0,6	10,5	366
	50 Sh*	2500	7500	750					19000	0,8	7,9	570
	65 Sh*	3200	9600	960					48000	1,2	5,2	1200
125 HE	T40 Sh	3000	9000	900	240	120	60	2300	19000	0,6	10,5	617
	T50 Sh	4000	12000	1200					30000	0,8	7,9	974
	T65 Sh	5000	15000	1500					75000	1,2	5,2	2434
	40 Sh*	3000	9000	900	180	60	–		19000	0,6	10,5	617
	50 Sh*	4000	12000	1200					30000	0,8	7,9	974
	70 Sh*	5000	15000	1500					75000	1,2	5,2	2434
G 125 HE	T40 Sh	4000	12000	1200	268	134	67	2250	30000	0,6	10,5	560
	T50 Sh	5200	16000	1600					44000	0,8	7,9	920
	T65 Sh	6500	20000	2000					110000	1,2	5,2	1915
	40 Sh*	4000	12000	1200	200	67	–		30000	0,6	10,5	560
	50 Sh*	5200	16000	1600					44000	0,8	7,9	920
	70 Sh*	6500	20000	2000					110000	1,2	5,2	1915
150 HE	T40 Sh	5500	16500	1650	250	150	100	1950	42000	0,6	10,5	714
	T50 Sh	7000	21000	2100				2050	67000	0,8	7,9	1200
	T65 Sh	9000	27000	2700				2200	166000	1,2	5,2	2500
G 150 HE	T40 Sh	7000	21000	2100	275	165	110	1900	60000	0,6	10,5	1485
	T50 Sh	9200	27600	2760				2000	95000	0,8	7,9	2372
	T65 Sh	11500	34500	3450				2100	236000	1,2	5,2	5874
200 HE	T40 Sh	9500	28500	2850	325	195	130	1700	85000	0,6	10,5	1720
	T50 Sh	12500	37500	3750				1800	136000	0,8	7,9	2740
	T65 Sh	16000	48000	4800				1900	335000	1,2	5,2	6769
200D HE	T40 Sh	19000	57000	5700	650	390	260	1700	170000	0,6	10,5	3440
	T50 Sh	25000	75000	7500				1800	272000	0,8	7,9	5480
	T65 Sh	32000	96000	9600				1900	670000	1,2	5,2	13538
G 200 HE	T40 Sh	11500	34500	3450	350	210	140	1600	105000	0,6	10,5	1952
	T50 Sh	15000	45000	4500				1700	167000	0,8	7,9	3114
	T65 Sh	19500	58500	5850				1800	412000	1,2	5,2	7708
G 200D HE	T40 Sh	23000	69000	6900	700	420	280	1600	210000	0,6	10,5	3904
	T50 Sh	30000	90000	9000				1700	334000	0,8	7,9	6228
	T65 Sh	39000	117000	11700				1800	824000	1,2	5,2	15416
NEW 240 HE	T50 Sh	25000	75000	7500	375	225	150	1500	305000	0,8	7,9	3712
	T65 Sh	32000	96000	9600					754000	1,2	5,2	9160
NEW 275 HE	T50 Sh	35000	105000	10500	400	240	160	1500	488000	0,8	7,9	4780
	T65 Sh	45000	135000	13500					1005000	1,2	5,2	11785

T = Temperature stable rubber compound. The technical data mentioned apply for an ambient temperature of T = 60 °C.
* Expiring as a standard

BoWex-ELASTIC® HE1 und HE2
Highly flexible flange couplings

Axial plug-in, available in different kinds of hardness



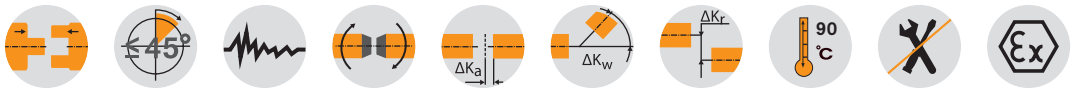

Components

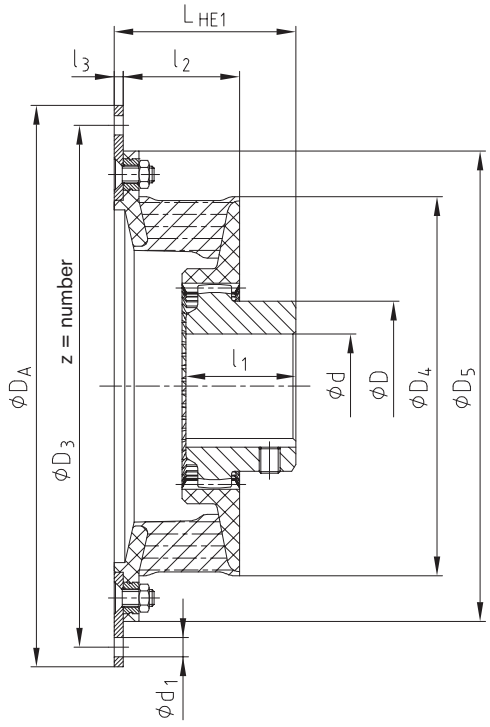

Type HE1

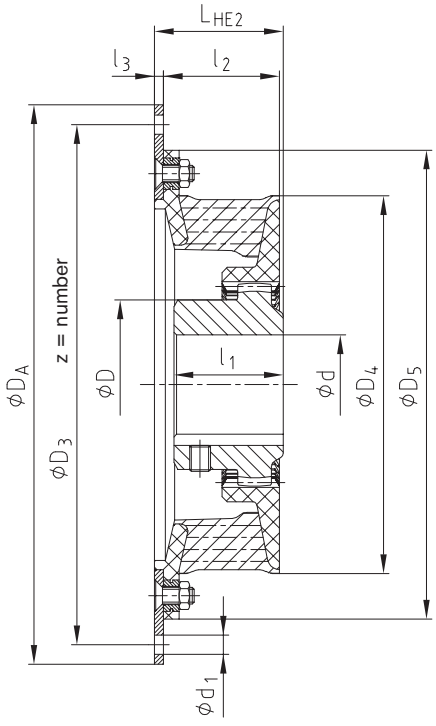

Type HE2

Flange dimensions acc. to SAE J 620 [mm]

Size	D_A	D_3	z	d_1
6 ½"	215,90	200,02	6	9
7 ½"	241,30	222,25	8	9
8"	263,52	244,47	6	11
10"	314,32	295,27	8	11
11 ½"	352,42	333,37	8	11
14"	466,72	438,15	8	13

BoWex-ELASTIC® Type HE1 and HE2

Size	Bore d [mm]		Flange connection according to SAE - J 620						Dimensions [mm]								Weight with pilot bored coupling [kg]	Mass moment of inertia with pilot bored coupling	
	Pilot bored	max.	6 ½"	7 ½"	8"	10"	11 ½"	14"	l_3	l_2	D_4	D_5	D	l_1	L_{HE1}	L_{HE2}		J_A [kgm²]	J_L [kgm²]
42 HE	-	42	●	●					4	45	146	180	65	42	70	50	2,7	0,0061	0,0014
					●												2,9	0,0083	0,0014
48 HE	-	48	●	●					4	45	164	198	68	50	78	50	2,9	0,0106	0,0019
					●												3,1	0,0148	0,0019
						●											3,9	0,0298	0,0019
65 HE	21	65				●			5	55	205	244	96	55	85	62	6,4	0,0377	0,0064
							●										7,2	0,0594	0,0064
80 HE	31	80				●			-	70	266	-	124	90	126	74	10,9	0,0211	0,0283
							●		6			316			132	80	13,0	0,0726	0,0283
G 80 HE	31	80					●		-	80	302	-	124	90	136	84	12,5	0,0402	0,0428
								●	6			356			142	90	17,3	0,2251	0,0428

Other flange connections on request

Ordering example:

BoWex-ELASTIC® 42	HE1	40	8	70	U
Coupling size	Type	Elastomer hardness	Flange Ø D_A acc. to SAE or special	Mounting length LHE	Unbored or with finish bore

BoWex-ELASTIC® HE3 und HE4
Highly flexible flange couplings

Axial plug-in, available in different kinds of hardness



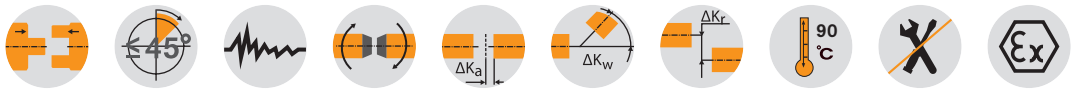

BoWex-ELASTIC® Type HE3 and HE4

Size	Bore d [mm]		Flange connection according to SAE - J 620												Dimensions [mm]							Weight with pilot bored coupling [kg]	Mass moment of inertia with pilot bored coupling	
	Pilot bored	max.	6 ½"	7 ½"	8"	10"	11 ½"	14"	16"	18"	21"	24"	Ø800	Ø885	l_3	l_2	D_4	D	l_1	L_{HE3}	L_{HE4}		J_A [kgm²]	J_L [kgm²]
42 HE	-	42	●	●											2	33	145	65	42	55	40	1,7	0,0057	0,0014
				●																		1,8	0,0060	0,0020
48 HE	-	48			●										2	37	163	68	50	68	42	2,0	0,0062	0,0020
						●																2,2	0,0065	0,0020
G65 HE	21	65				●									3	45	205	96	55	73	50	5,3	0,0242	0,0076
							●															5,7	0,0372	0,0076
GG65 HE	21	65			●										3	48	220	96	55	73	50	5,3	0,0251	0,0085
						●																5,6	0,0273	0,0085
							●															5,9	0,034	0,0085
80 HE	31	80				●									4	56	265	124	90	112	60	11,4	0,0388	0,0305
G80 HE	31	80					●								4	66	300	124	90	122	70	11,6	0,0702	0,0465
GG80 HE	31	80					●								4	71	32	124	90	130	80	14,8	0,0769	0,0468
100 HE	38	100						●							4	80	350	152	110	150	82	24,1	0,1951	0,1019
125 HE	45	125						●							-	92	416	192	140	186	103	45,8	0,3013	0,2861
									●						6					192	109	47,7	0,4123	0,2861
G125 HE	45	125							●						6	89	440	192	140	179	91	48,4	0,4781	0,2916
										●												50,5	0,6380	0,2916
150 HE	44	160								●					6	140	470	225	150	205	160	66,7	0,6918	0,5192
											●												1,1410	0,5192
G150 HE	44	160								●					6	140	504	225	150	205	160	76	0,754	0,651
											●												1,246	0,651
200 HE	46	180									●				6	149	568	250	175	240	160	100	1,535	1,145
												●											1,514	1,145
200D HE	46	180									●				25	325	568	250	300	350	-	355	16,75	2,98
												●											22,89	2,98
G200 HE	46	180									●				6	149	600	250	175	240	160	105	1,727	1,347
												●											2,106	1,347
G200D HE	46	180									●				25	325	600	250	300	350	-	370	18,65	3,28
												●											25,12	3,28
NEW 240 HE	80	240											●		8	172	772	326	200	270	205	200	4,26	4,05
NEW 275 HE	80	275												●	10	185	810	372	240	312	215	305	7,76	7,68

Ordering example:

BoWex-ELASTIC® 80	HE3	40	10	112	U
Coupling size	Type	Elastomer hardness	Flange Ø D_A acc. to SAE or special	Mounting length LHE	Unbored or with finish bore

Type HE3

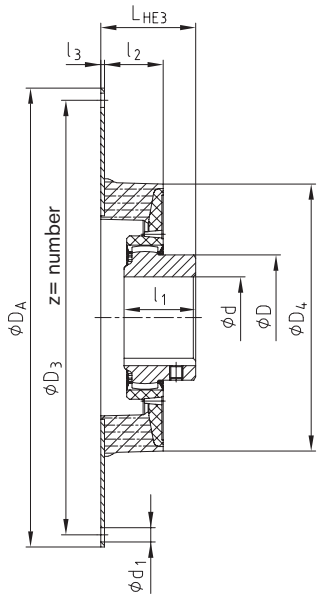

Type HE4

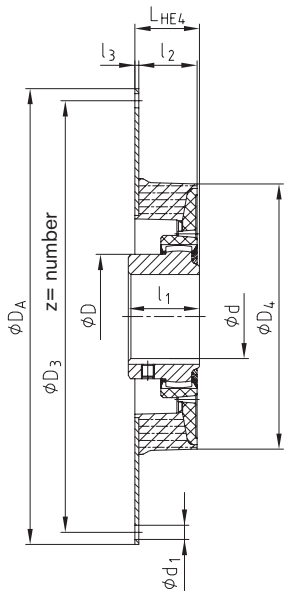

Type D

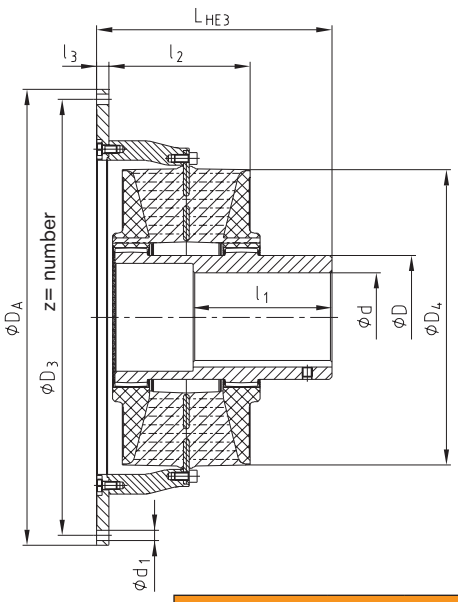

Flange dimensions acc. to SAE J 620 [mm]

Size	D_A	D_3	z	d_1
6 ½"	215,90	200,02	6	9
7 ½"	241,30	222,25	8	9
8"	263,52	244,47	6	11
10"	314,32	295,27	8	11
11 ½"	352,42	333,37	8	11
14"	466,72	438,15	8	13
16"	517,50	489,00	8	13
18"	571,50	542,90	6	17
21"	673,10	641,35	12	17
24"	733,42	692,15	12	21
Ø800	800	770	32	17
Ø885	885	855	36	17

Displacements

For other operating speeds or higher operating temperatures the permissible radial displacement is calculated as follows:

$$\Delta Kr_{perm.} = \Delta Kr \bullet St \bullet \sqrt{1500 / nx}$$

Radial displacement ΔK_r

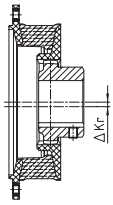

Angular displacement ΔKw

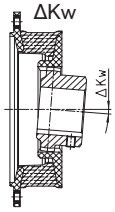

Axial displacement ΔKa

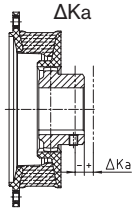

Displacements

Size		42 HE			48 HE			65 HE G65 HE GG65 HE			80 HE G80 HE GG80 HE			100 HE			125 HE G125 HE			150 HE G150 HE			200 HE G200 HE			240 HE			275 HE		
Elastomer hardness [Shore A]		T40 Sh	T50 Sh	T65 Sh	T40 Sh	T50 Sh	T65 Sh	T40 Sh	T50 Sh	T65 Sh	T40 Sh	T50 Sh	T65 Sh	T40 Sh	T50 Sh	T65 Sh	T40 Sh	T50 Sh	T70 Sh	T40 Sh	T50 Sh	T65 Sh	T40 Sh	T50 Sh	T65 Sh	T40 Sh	T50 Sh	T65 Sh	T40 Sh	T50 Sh	T65 Sh
Perm. radial displ. ΔKr [mm]	n=1500 rpm	1,1	1,0	0,5	1,2	1,1	0,5	1,6	1,5	0,7	1,8	1,7	0,8	2,2	2,0	1,0	2,5	2,3	1,1	2,8	2,5	1,3	3,0	2,7	1,5	3,2	2,9	1,6	3,4	3,1	1,8
	max. [1]	3,6	3,3	1,5	3,8	3,5	1,7	5,1	4,7	2,2	5,7	5,3	2,4	6,5	6,0	3,0	7,5	6,9	3,3	8,0	7,5	4,0	8,5	8,0	4,5	9,0	8,5	5,0	9,5	9,0	5,5
Perm. angular displ. ΔKw [°]	n=1500 rpm	1,0	0,75	0,5	1,0	0,75	0,5	1,0	0,75	0,5	1,0	0,75	0,5	1,0	0,75	0,5	1,0	0,75	0,5	1,0	0,75	0,5	1,0	0,75	0,5	1,0	0,75	0,5	1,0	0,75	0,5
	n=3000 rpm	0,5	0,4	0,25	0,5	0,4	0,25	0,5	0,4	0,25	0,5	0,4	0,25	0,5	0,4	0,25	0,5	0,4	0,25	–	–	–	–	–	–	–	–	–	–	–	–
Perm. angular displ. ΔKw [mm]	max. [1]	1,5			1,5			1,5			1,5			1,5			1,5			1,5			1,5			1,5			1,5		
Perm. axial displacement ΔKa [mm]		± 2			± 2			± 2			± 2			± 3			± 3			± 4			± 4			± 4			± 4		

[1] for short-term starting operation

Process of assembly, screw type with quality, tightening torques according to KTR assembly instructions (see www.ktr.com).

BoWex-ELASTIC® HE-ZS and HEW
Highly flexible flange couplings

With drop-out center part for pump drives, highly flexible shaft-to-shaft coupling





BoWex-ELASTIC® Type HE-ZS

Size	Max. finish bore d4	Flange connection to SAE-J 620 DA for HE-ZS										Dimensions [mm]									Drop-out center part HE-ZS L_Z [mm]					Weight with max. bore [kg]	Mass moment of inertia [kgm²]	
		6 ½"	7 ½"	8"	10"	11 ½"	14"	16"	18"	21"	24"	D_1	D_4	D_5	D_7	D_8	l_1	l_2	l_3	l_6	100	120	140	180	250		J_A	J_L
		●																48	10		●	●				2,9[1]	0,0026	0,0033
48	28		●									160	164	200	78	45	40			37	●	●				3,6[1]	0,0106	0,0033
				●														37	4		●	●				3,9[1]	0,0148	0,0033
					●																●	●				4,6[1]	0,0298	0,0033
G65	45				●								205		110	72	60	48	3	56		●	●			7,3[1]	0,0242	0,0129
						●																	●	●		8,9[2]	0,0372	0,0150
80	65				●							265	266	318	145	100	80	70	11	76			●	●		13,7[2]	0,0211	0,0497
						●													6				●	●		15,9[2]	0,0726	0,0497
G80	65					●						300	302	358	145	100	80	80	11	76			●	●		14,6[2]	0,0402	0,0634
							●												6					●	●	19,5[2]	0,2251	0,0634
100	95						●						350		202	148	110	80	4	106				●	●	29,8[2]	0,1951	0,1779
125	100						●						416		225	165	120	99	6	116				●	●	41,7[2]	0,3013	0,3363
								●																●	●	43,6[2]	0,4123	0,3363
G125	120							●					440		225	165	120	95	6	116				●	●	45,6[2]	0,4781	0,3700
									●															●	●	47,7[2]	0,6380	0,3700
150	135								●				470		245	185	140	140	6	136					●	63,2	0,6918	0,6647
										●															●	67,9	1,1410	0,6647
G150	135								●				504		245	185	140	140	6	136					●	68,3	0,7540	0,7677
										●															●	73,0	1,2460	0,7677
200	150									●			568		270	205	160	149	6	156					●	98,7	1,5348	1,4109
											●														●	101,7	1,9138	1,4109
G200	150									●			600		270	205	160	149	6	156					●	103,5	1,7270	1,6401
											●														●	106,6	2,1060	1,6401

[1] with L_Z 120 [2] with L_Z 100

BoWex-ELASTIC® Type HEW

Size	Max. finish bore		Dimensions [mm]																	Weight with max. bore [kg]	Mass moment of inertia [kgm²]	
	d_2	d_3	D	D_2	z x M		D_4	D_5	D_6	l_1	l_2	l_3	l_4	l_5	E	E_1	L_{HEW1}	L_{HEW2}		J_A	J_L
42	48	50	68	162	6	M6	146	180	85	50	45	15	50	42	4	32	132	104		4,3	0,0121	0,0015
48	48	55	68	180	8	M6	164	200	92	50	45	17	55	45	4	32	137	109		5,5	0,0204	0,0019
65	65	75	96	224	8	M8	205	245	125	70	55	28	75	63	5	42	187	150		13,2	0,0752	0,0071
80	80	80	124	295,27	8	M10	266	318	130	90	70	17	80	70	5	45	215	160		19,7	0,1449	0,0285
G 80	85	95	124	333,4	8	M10	302	358	145	90	80	22	90	78	5	55	235	185		25,9	0,2748	0,0422
100	100	110	152	438,15	8	M12	350	478	158	110	80	14	111,5	113	26	57	278	207		48,5	0,8356	0,1050
125	125	125	192	438,15	8	M12	416	478	175	140	99	14	170	158	-	45	327	-		67,2	0,9498	0,2617
G125	125	125	192	489	8	M12	440	530	175	140	95	14	170	158	-	45	327	-		76,6	1,4492	0,3034
150	160	160	225	542,9	6	M16	470	585	225	150	100	18	150	145	-	70	380	-		110	2,7206	0,5303
G150	160	160	225	542,9	6	M16	504	585	225	150	108	18	150	145	-	70	380	-		113,4	2,7809	0,5861
200	180	200	250	641,35	12	M16	568	683	280	175	149	26	220	214	-	85	480	-		195	6,6418	1,1406
G200	180	200	250	641,35	12	M16	600	683	280	175	149	26	220	214	-	85	480	-		200	6,6099	1,3419

Other sizes available. Please consult with us.

Type HE-ZS

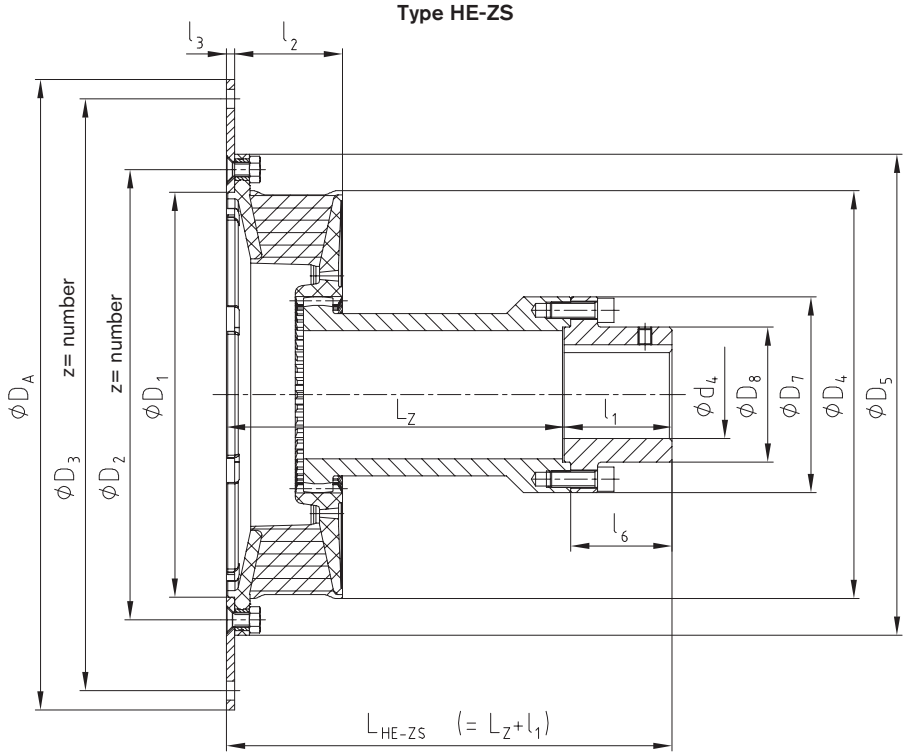

Type HEW1

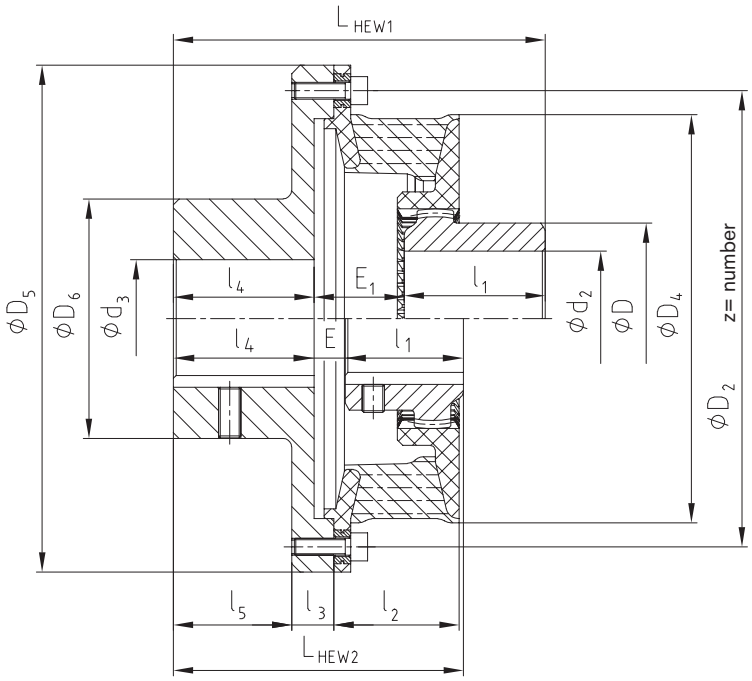

Type HEW2

BoWex-ELASTIC® HEG
Highly flexible flange couplings

Cardan shaft auxiliary coupling



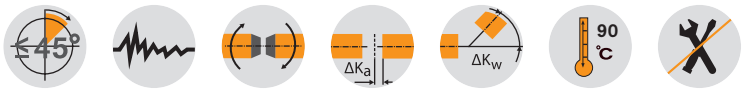

BoWex-ELASTIC® Type HEG1 and Type HEG2

Size	Flywheel connection to SAE-J 620					Metric flange connection HEG1 dimensions [mm]										MECHANICS cardan shaft connection HEG2 dimensions [mm]								Dimensions [mm]			Weight [kg]	Mass moment of inertia	
	8"	10"	11 ½"	14"	16"	58	65	75	90	100	120	150	180	l_4	L	2 C	4 C	5 C	6 C	7 C	8,5 C	8 C	L_1	D_4	l_2	l_3		JA [kgm²]	JL [kgm²]
48	●					●	●	●						8	58,5									163	43,5	8	7	0,03	0,006
		●				●	●	●																			8	0,06	0,006
G 65		●						●	●	●				8	66	●	●	●					71	205	48,0	10	12	0,07	0,02
			●					●	●	●						●	●	●									14	0,10	0,02
80		●						●	●	●	●			10	88,5		●	●	●				104	265	68,5	23	21	0,11	0,06
			●					●	●	●	●						●	●	●							12	23	0,17	0,06
G 80			●						●	●	●	●		10	96			●	●	●			110	302	74,0	23	26	0,18	0,09
				●					●	●	●	●						●	●	●						12	33	0,48	0,09
100				●						●	●	●	●	12	98					●	●		128	350	78,0	16	41	0,63	0,19
125				●						●	●	●	●	12	111						●	●	135	416	96,0	18	56	0,74	0,42
					●					●	●	●	●								●	●				12	59	0,97	0,42

Flywheel connection to SAE-J 620 [mm]

Size	D_A	D_1	z_1	d_1
8"	263,52	244,47	6	11
10"	314,32	295,27	8	11
11 ½"	352,42	333,37	8	11
14"	466,72	438,15	8	14
16"	517,50	489,00	8	14

Metric flange connection HEG1 [mm]

Size	D_2	l_1	D_3	z_2	d_2
58	30	1,0	47,0	4	M5
65	35	1,0	52,0	4	M6
75	42	1,5	62,0	6	M6
90	47	2,0	74,5	4	M8
100	57	2,0	84,0	6	M8
120	75	2,0	101,5	8	M10
150	90	2,5	130,0	8	M12
180	110	2,5	155,5	8	M14

MECHANICS cardan shaft connection HEG 2 [mm]

Size	D_5	l_5	l_6	l_7	l_8	z_3
2 C	79,35	33,3	59,5	9,50	3,8	M8
4 C	107,92	36,5	87,3	9,50	3,8	M8
5 C	115,06	42,9	88,9	14,26	5,1	M10
6 C	140,46	42,9	114,3	14,26	5,1	M10
7 C	148,39	49,2	117,5	15,85	6,0	M12
8,5 C	165,08	71,4	123,8	15,85	6,0	M12
8 C	206,32	49,2	174,6	15,85	6,0	M12

BoWex-ELASTIC® type HEG has a maintenance-free plain bearing compensating for the radial loads generated by the cardan shaft. Moreover, the coupling has a friction disk which is axially prestressed by the elastomer part. The elastomer part is made of natural rubber via vulcanizing.
The permanent friction provides the coupling with excellent damping properties reducing the high vibratory torques arising in the coupling during the starting process and running through resonance considerably.

Type HEG1

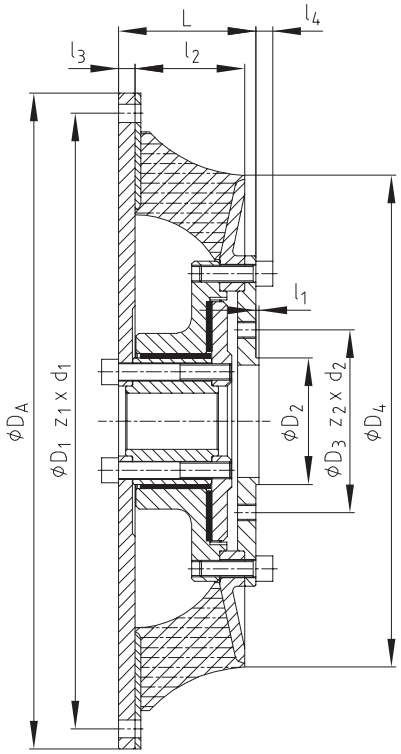

Type HEG2

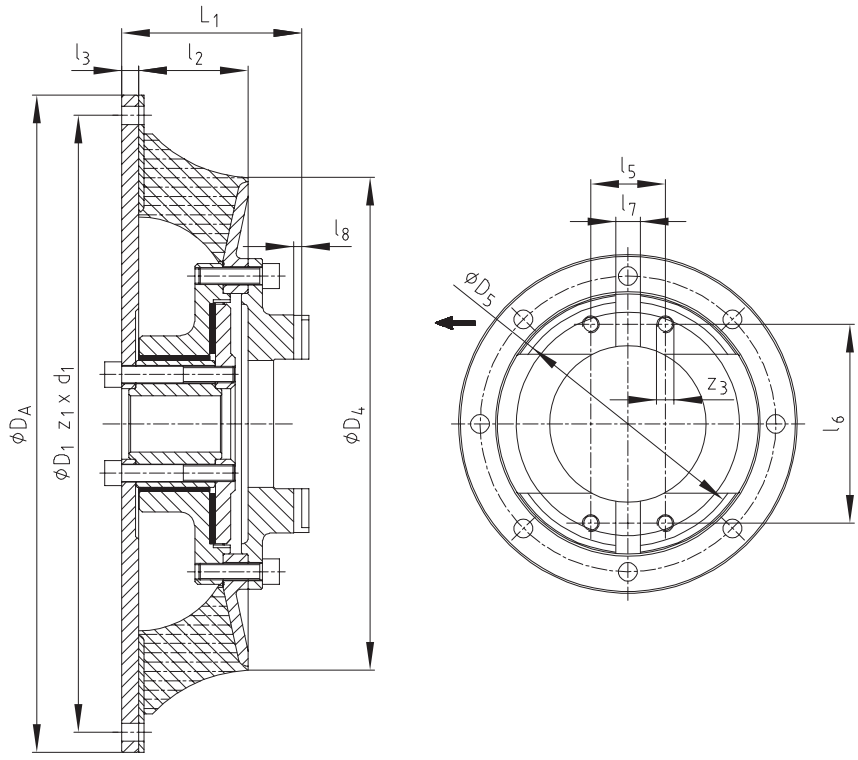

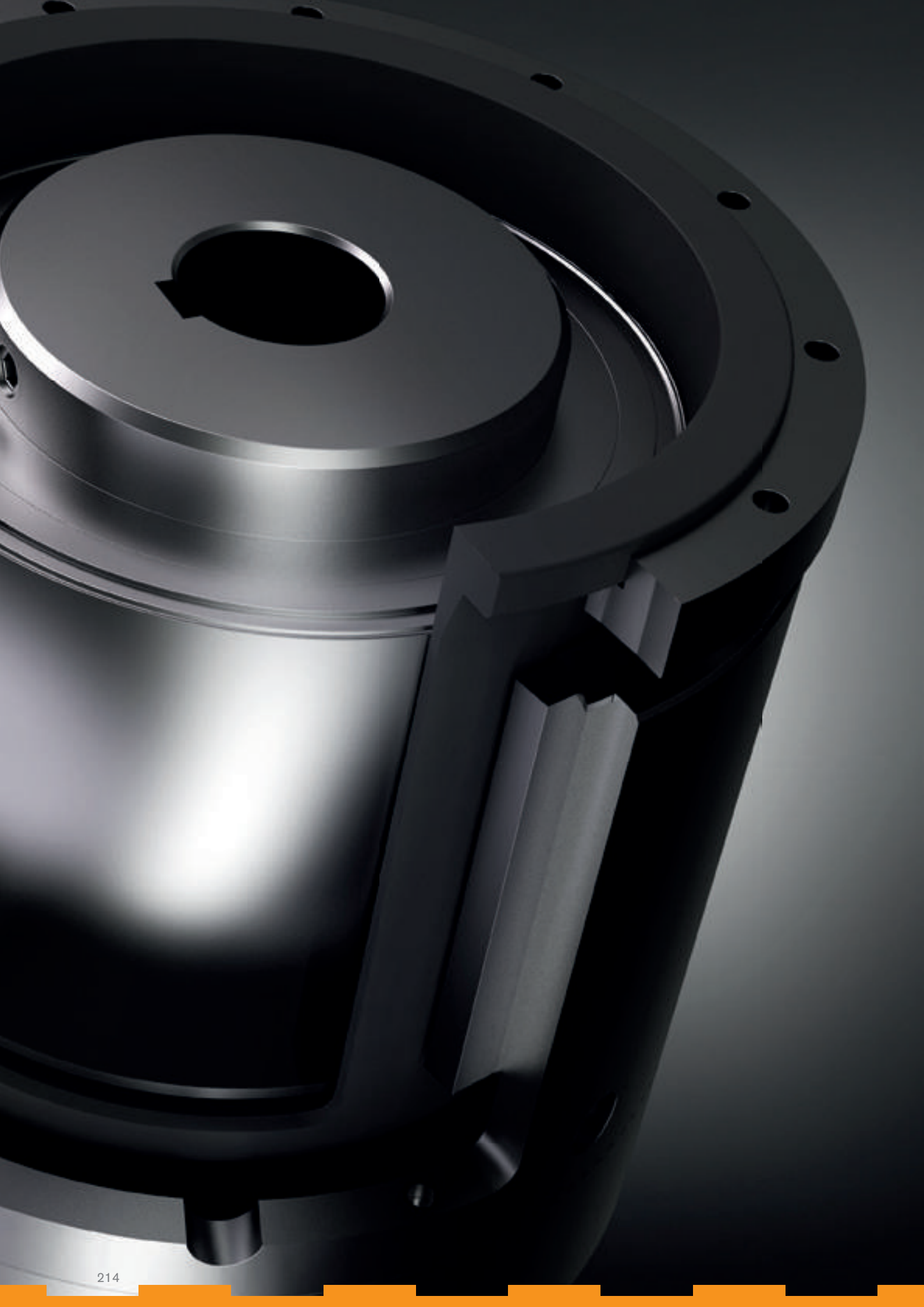

Magnetic couplings

Types and operating description 216

MINEX®-S

Containment shroud – material stainless steel 218
Containment shroud – material Hastelloy 220
Containment shroud – material PEEK 222
Containment shroud – material oxide ceramics 224
Conversion kits and customized component assemblies 226
Other types 227

MINEX®-S

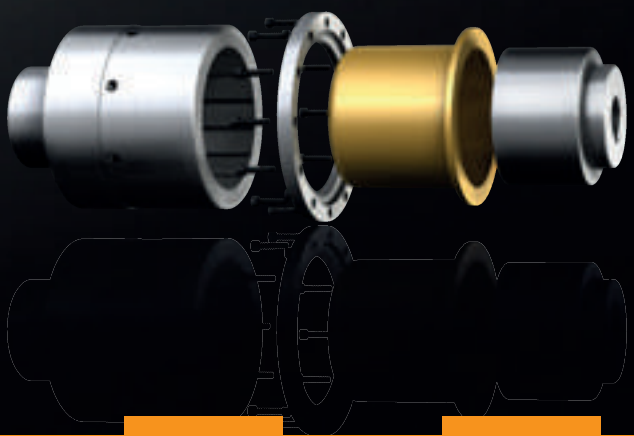

MAGNETIC COUPLINGS
TYPES AND OPERATING DESCRIPTION

General information



General description

MINEX®-S magnetic couplings transmit the torque without contact through magnetic forces between the internal and external rotor. They ensure a hermetic seperation between driving and driven side in pumps and mixers sealing critical liquids and gases reliably. As a result they prevent serious leakages operating as a reliable alternative to usual dynamic shaft seals.

Internal rotor



External rotor



Run of flux lines



Operation/structure

The coupling consists of an external and an internal rotor. The external rotor has high-quality, permanent magnets of changing polarity on the inner side and the internal rotor has them on the outside.
The external rotor is normally fixed on the drive side and the magnets are glued in the keyways. The magnets of the driven-sided internal rotor are completely encapsulated.

Torque transmission

In their non-operative states the north and south poles of the rotors are opposite to each other and the magnetic field is completely symmetric. It is only when the rotors are twisted that the magnetic field lines are moved, hence the torque is transmitted through the air gap. Then there is a synchronous operation under a constant torsion angle.
If the maximum coupling torque and the maximum torsion angle are exceeded, the power transmission is interrupted.

Containment shroud



Sealing function

The containment shroud that is fixed to the housing separates internal and external rotor from each other.
It ensures a completely leak-proof separation of product and atmosphere.
The sealing is achieved statically, e. g. with a flat seal or an O-ring, thus eliminating the need to use dynamically loaded sealing elements.
As a standard KTR supplies both metallic and non-metallic containment shrouds.
The metallic types cover the widest applications range, yet causing eddy current losses which might require cooling measures.
If eddy current losses can be definitely excluded, the energy-efficient alternative materials PEEK and ceramics are available.



Use in explosive applications

MINEX® couplings are suitable for power transmission in drives in hazardous locations. The types with metallic, ceramic and PEEK containment shrouds are certified and confirmed according to EC directive 94/9/EC (ATEX 95) as components of category II and thus suitable for the use in potentially explosive atmospheres of zone 2G.

Please read through our information included in the respective Type Examination Certificate and the operating and mounting instructions at www.ktr.com.

Properties of magnetic couplings

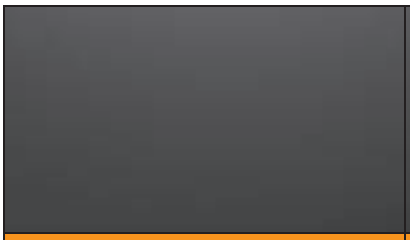


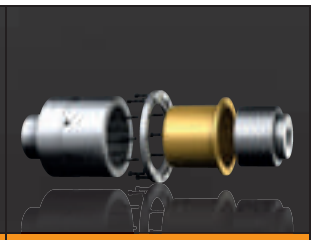

Product	Type with metallic containment shroud	Type with containment shroud made of PEEK		Type with containment shroud made of oxide ceramics
Type	Permanent-magnetic synchronous coupling			
Properties				
Permanent-magnetic	●	●		●
Contactless	●	●		●
Maintenance-free	●	●		●
Torsionally flexible	●	●		●
Low vibrations	●	●		●
Special features/applications				
	Most common type Covering the widest performance range Particularly suitable for pump drives/ applications with liquids High t_{max}[°C] and pmax [bar]	No eddy current losses Energy-efficient and economic Particularly suitable for dry running For low demands on tmax [°C] and p_{max} [bar]		High t_{max} [°C] and pmax [bar]
Torque range T_{KN} [Nm]				
Max.	1.000	370		550
Max. pressure resistance [bar]				
$P_{max.}$	Up to 90 bar depending on size	Up to 16 bar depending on size		Up to 25 bar depending on size
Geometries				
Shaft diameter min./max. [mm]	Ø 5 pilot bored	Ø 5 pilot bored		Ø 5 pilot bored
Max. temperature resistance [°C]				
$t_{max.}$	150 / 300 depending on magnet material	130		300
Certifications/type examinations				
ATEX	●	CFK reinforce-ment ●	GFK reinforce-ment	●
	For further details see catalogue pages 218 - 221	For further details see catalogue pages 222 - 223		For further details see catalogue pages 224 - 225

Torque reduction with temperature increase

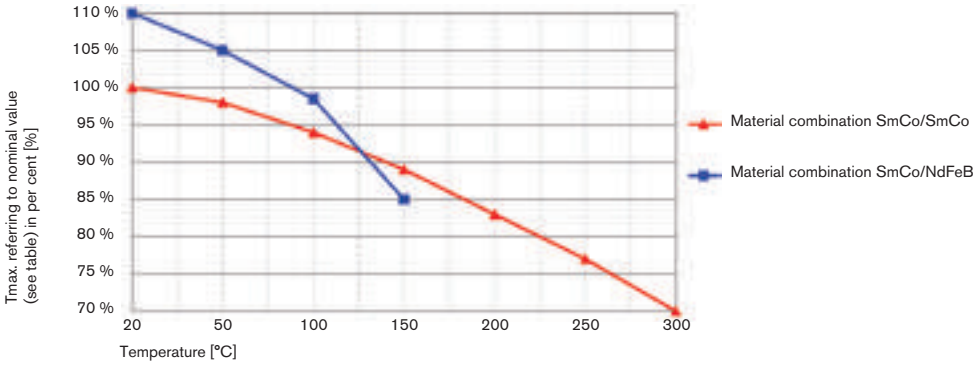

Temporary torque reduction with increased temperature for alternative material combinations [%]

Please note:
KTR recommends to use NdFeB magnets for the external rotor, provided that the operating temperature falls below 150 °C.

Containment shroud – material stainless steel

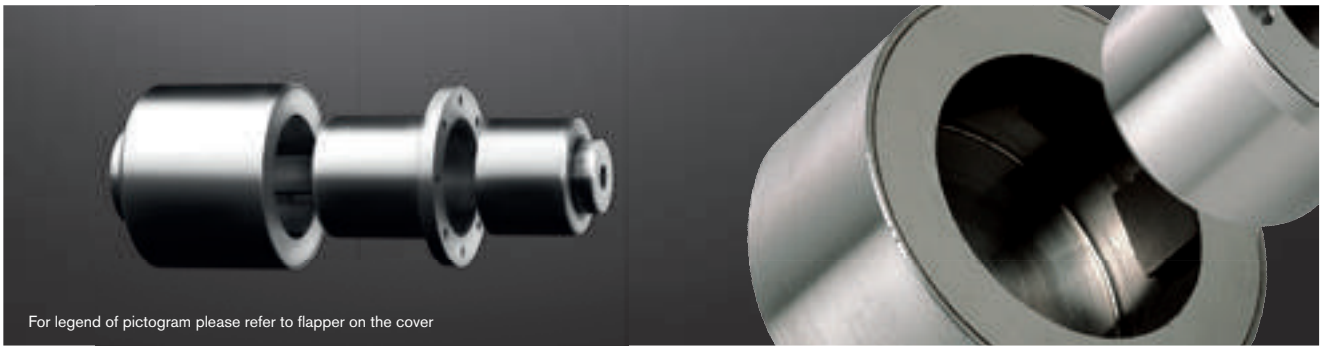



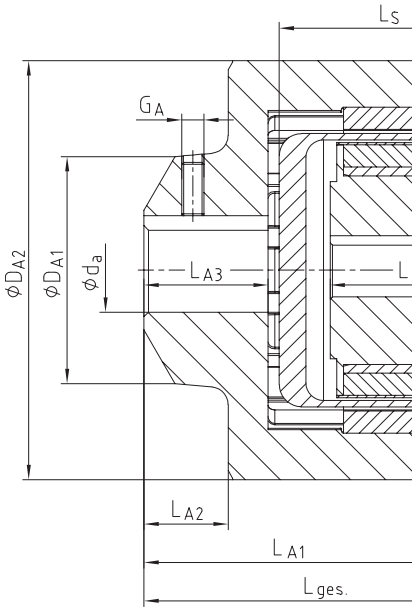

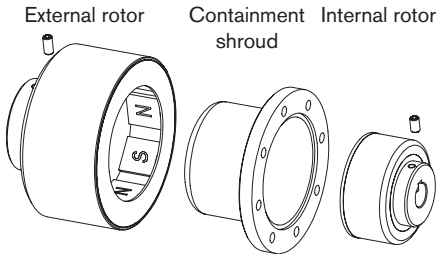

Technical data – Internal rotor and containment shroud														
Size	TK max. [Nm] with ~ 20 °C	Dimensions [mm]												
		Internal rotor							Containment shroud					
		Finish bore [1] di		D_{I1}	L_{I1}	GI	S_I		D_{S1}	D_{S2}	D_{S3}	D_{S4}	Z_S	L_S
		min	max.				min.	max.						
SA 22/4	0,15	5	9	20	20	M3	2,0	2,0	21,5	38	46	4,5	8	29
SA 34/10	1	5	12	20	22	M3	2,0	5,5	34	46	55	4,5	4	30,5
SA 46/6	3	8	16	28	33	M4	6,5	7,0	46	64	78	4,5	8	45
SA 60/8	7	12	22	35	36,3	M5	1,7	5,5	59	75	89	5,5	8	50
SB 60/8	14			36	56	M5	0,0	4,0						70,3

Technical data – External rotor and general											
Size	Dimensions [mm]										
	External rotor								General		
	Finish bore [1] da		D_{A1}	D_{A2}	G_A	L_{A1}	L_{A2}	L_{A3}	ΔS	L_{total}	
	min.	max.								min.	max.
SA 22/4	5	11	18	38	M4	35	8,5	11	5	42	42
SA 34/10	5	14	22	53	M4	38,8	10,5	13	5,3	46	49,5
SA 46/6	5	24	40	69,5	M5	53	16	22	9	69	69,5
SA 60/8	9	32	50	94,5	M6	66	19	28	12	80	83,3
SB 60/8	9	38			M8	93,3	15	30		105,2	109,2

[1] Bore H7 with keyway to DIN 6885, sheet 1 [JS9]

Ordering example:

MINEX® SA 60/8	NdFeB	d_i Ø20mm	d_a Ø24mm
Coupling size	NdFeB – $t_{max.}$ = 150 °C Sm2Co17 – $t_{max.}$ = 300 °C	Finish bore (H7), feather keyway acc. to DIN 6885 sheet 1 (JS9)	

Examples of application

MINEX® couplings with containment shroud made of stainless steel are the most common type for pump drives and other applications with liquids in the lower performance range. Subject to their high resistance to pressure and temperature they cover a wide application range. The magnetic rotors are available from stock in an unbored or pilot bored design. If requested, the parts can be finish bored according to ISO fit H7 with feather keyway to DIN 6885, sheet 1- JS9.
Inside the rotating magnetic field metallic containment shrouds generally cause losses of eddy current which are converted into heat and which may require cooling measures. On applications with pumps the heat produced can basically be dissipated by the medium to be pumped. If higher pressure resistance than covered by the KTR standard is required, KTR provide for customized special solutions.

Typical applications: gear pumps, centrifugal pumps, screw spindle pumps, agitators, PU foaming lines.

Use in explosive applications

MINEX® couplings with containment shroud made of stainless steel are suitable for power transmission in drives in hazardous locations. They are certified and confirmed according to EC directive 94/9/EC (ATEX 95) as components of category II and thus suitable for the use in hazardous locations of zone 2G.




II 2G c IIC T X

If the couplings operate in hazardous locations, the user has to provide for special measures. Please read through our information included in the respective Type Examination Certificate and the operating and mounting instructions at www.ktr.com.

Technical data – Materials, temperature and pressure resistance

Size	$T_{K\ max.}$ [Nm] with 20 °C	Internal rotor			Containment shroud			External rotor (+ optional flange hub)		
		Standard material		Max. temperature	Standard material		Max. pressure	Standard material		Max. temperature
		Hub	Magnets	$t_{max.}$ [°C]	Hub	Cont. shroud	$P_N/P_{max.}$ [bar]	Hub	Magnets	$t_{max.}$ [°C]
SA 22/4	0,15	1.4462	NdFeB	150	1.4571	1.4571	60/90	S355J2G3	NdFeB	150
SA 34/10	1	1.4462	NdFeB	150	1.4571	1.4571	16/24	S355J2G3	NdFeB	150
SA 46/6	3	1.4571	Sm2Co17	300	1.4571	1.4571	16/24	S355J2G3	Sm2Co17	300
SA 60/8	7	1.4571	Sm2Co17	300	1.4571	1.4571	40/60	S355J2G3	Sm2Co17*	300
SB 60/8	14	1.4571	Sm2Co17	300	1.4571	1.4571	40/60	S355J2G3	Sm2Co17*	300

*) External rotor alternatively available with magnets made of NdFeB ($t_{max.}$=150°C)

Containment shroud – material Hastelloy

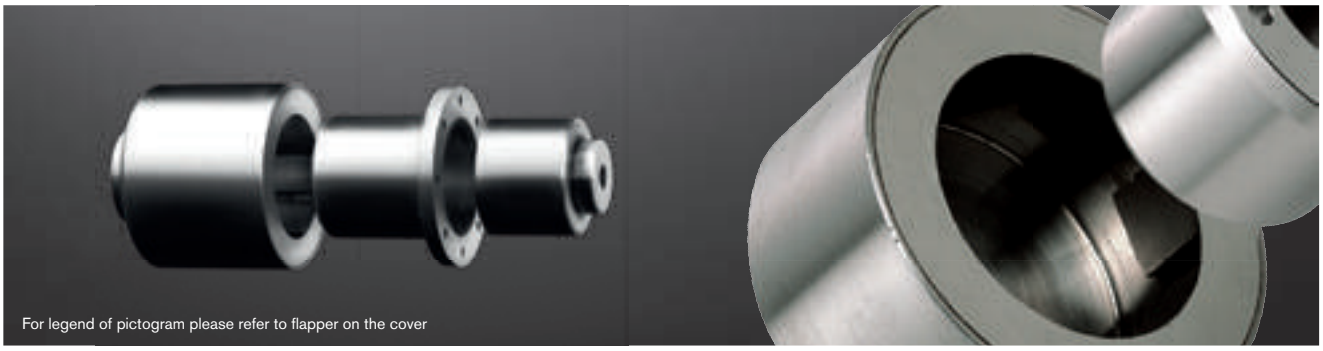



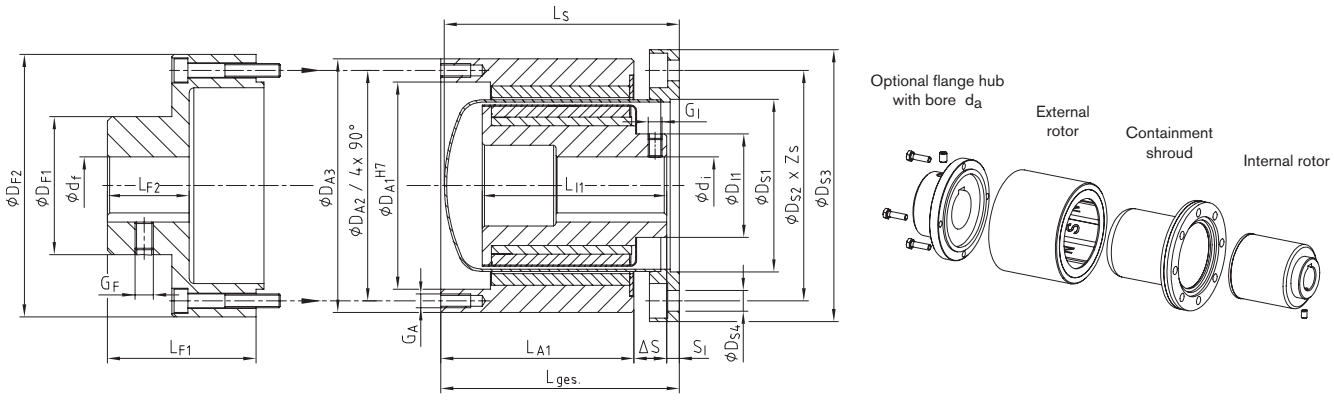

Technical data – Materials, temperature and pressure resistance										
Size	T_K max. [Nm] with 20 °C	Internal rotor			Containment shroud			External rotor (+ optional flange hub)		
		Standard material		Max. temperature	Standard material		Max. pressure	Standard material		Max. temperature
		Hub	Magnets	$t_{max.}$ [°C]	Hub	Cont. shroud	$P_N/P_{max.}$ [bar]	Hub	Magnets	$t_{max.}$ [°C]
SA 75/10	10	1.4571	Sm2Co17	300	1.4571	2.4602**	25/37,5	S355J2G3	Sm2Co17*	300
SB 75/10	24	1.4571	Sm2Co17	300	1.4571	2.4602**	25/37,5	S355J2G3	Sm2Co17*	300
SC 75/10	40	1.4571	Sm2Co17	300	1.4571	2.4602**	25/37,5	S355J2G3	Sm2Co17*	300
SA 110/16	25	1.4571	Sm2Co17	300	1.4571	2.4856	25/37,5	S355J2G3	Sm2Co17*	300
SB 110/16	60	1.4571	Sm2Co17	300	1.4571	2.4856	25/37,5	S355J2G3	Sm2Co17*	300
SC 110/16	95	1.4571	Sm2Co17	300	1.4571	2.4856	25/37,5	S355J2G3	Sm2Co17*	300
SB 135/20	100	1.4571	Sm2Co17	300	1.4571	2.4856	25/37,5	S355J2G3	Sm2Co17*	300
SC 135/20	145	1.4571	Sm2Co17	300	1.4571	2.4856	25/37,5	S355J2G3	Sm2Co17*	300
SD 135/20	200	1.4571	Sm2Co17	300	1.4571	2.4856	25/37,5	S355J2G3	Sm2Co17*	300
SC 165/24	210	1.4571	Sm2Co17	300	1.4571	2.4856	25/37,5	S355J2G3	Sm2Co17	300
SD 165/24	280	1.4571	Sm2Co17	300	1.4571	2.4856	25/37,5	S355J2G3	Sm2Co17	300
SE 165/24	370	1.4571	Sm2Co17	300	1.4571	2.4856	25/37,5	S355J2G3	Sm2Co17	300
SD 200/30	430	1.4571	Sm2Co17	300	1.4571	2.4856	16/24	S355J2G3	Sm2Co17	300
SE 200/30	550	1.4571	Sm2Co17	300	1.4571	2.4856	16/24	S355J2G3	Sm2Co17	300
SD 250/38	670	1.4571	Sm2Co17	300	1.4571	2.4856	16/24	S355J2G3	Sm2Co17	300
SE 250/38	820	1.4571	Sm2Co17	300	1.4571	2.4856	16/24	S355J2G3	Sm2Co17	300
SF 250/38	1000	1.4571	Sm2Co17	300	1.4571	2.4856	16/24	S355J2G3	Sm2Co17	300

*) External rotor alternatively available with magnets made of NdFeB ($t_{max.}$ = 150°)
**) Containment shroud size 75 alternatively available made of stainless steel 1.4571 (P_N/P_{MAX} = 16/24 bar)

Ordering example:

MINEX® SB 75/10	NdFeB	d_i Ø20mm	d_a Ø24mm	Hastelloy
Coupling size	NdFeB – $t_{max.}$ = 150 °C Sm2Co17 – $t_{max.}$ = 300 °C	Finish bore (H7), feather keyway acc. to DIN 6885 sheet 1 (JS9)		Containment shroud type stainl. steel 1.4571 or Hastelloy

Examples of application

MINEX® couplings with containment shroud made of Hastelloy are the most common type for pump drives and other applications with liquids in the average and higher performance range. Subject to their high resistance to pressure and temperature they cover a wide application range.
Inside the rotating magnetic field metallic containment shrouds generally cause losses of eddy current which are converted into heat and which may require cooling measures. On applications with pumps the heat produced can basically be dissipated by the medium to be pumped. If higher pressure resistance than covered by the KTR standard is required, KTR provide for customized special solutions.

Typical applications: gear pumps, centrifugal pumps, screw spindle pumps, agitators, PU foaming lines.

Use in explosive applications

MINEX® couplings with containment shroud made of stainless steel are suitable for power transmission in drives in hazardous locations. They are certified and confirmed according to EC directive 94/9/EC (ATEX 95) as components of category II and thus suitable for the use in hazardous locations of zone 2G.

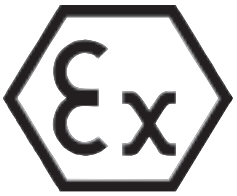

II 2G c IIC T X

If the couplings operate in hazardous locations, the user has to provide for special measures. Please read through our information included in the respective Type Examination Certificate and the operating and mounting instructions at www.ktr.com.

Technical data – External rotor and general

Size	Dimensions [mm]																												
	Internal rotor							Containment shroud						External rotor					Flange hub							General			
	Finish bore[1]		D_{I1}	L_{I1}	G_I	S_I		D_{S1}	D_{S2}	D_{S3}	D_{S4}	Z_S	L_S	D_{A1}	D_{A2}	D_{A3}	L_{A1}	G_A	$df_{max.}$	D_{F1}	D_{F2}	L_{F1}	L_{F2}	G_F	ΔS	Overall length[2] incl. flange hub			
	$di_{min.}$	$di_{max.}$				min.	max.																			min.	max.		
SA 75/10				39,5			46,5										41,3								12,2	140	164,5		
SB 75/10	12	32	45	58	M6	4	26,5	75	100	118	9	8	102	90	100	110	61,3	M6	42	60	114	64,5	35,5	M8		142			
SC 75/10				80			4,0										83,8								14,2	166,5	166,5		
SA 110/16				45			55,0										41,3									177,5			
SB 110/16	14	55	80	65	M8	4	35,0	110	133	153	9	12	115	126	135	145	61,3	M6	55	85	150	99,5	59,5	M10	18,7	183,5	214,5		
SC 110/16				85			15,0										81,3									203.5			
SB 135/20				65			50,5										70,3								18,2	190,5	204,5		
SC 135/20	20	70	90	85	M10	4	30,5	135	158	178	9	16	139	150	160	170	90,3	M6	70	100	170	65,5	48,5	M12					
SD 135/20				110			8,0										110,3								20,7	200,5			
SC 165/24				85			61,5										90,3								18,2	233			
SD 165/24	24	80	110	110	M12	6	39,0	163,5	192	218	11	12	170	180	188	198	110,3	M6	75	110	198	77	60	M16	20,7		247		
SE 165/24				130			19,0										130,3									234			
SD 200/30				135			24,0										130,3												
SE 200/30	38	90	130		M16	6		200	252	278	11	12	180	212	222	232		M6	80	120	232	120	98	M12	25,7	282	300		
SD 250/38				115			46,0										110,3									282			
SE 250/38	38	100	165	135	M16	6	26,0	255	285	315	13,5	12	182	272	282	292	130,3	M6	100	150	300	140	93	M16	25,7	302	322		
SF 250/38				155			6,0										150,3									322			

[1] Bore H7 with keyway to DIN 6885, sheet 1 (JS9)
[2] * Total length excl. flange hub = LS

Containment shroud – material PEEK

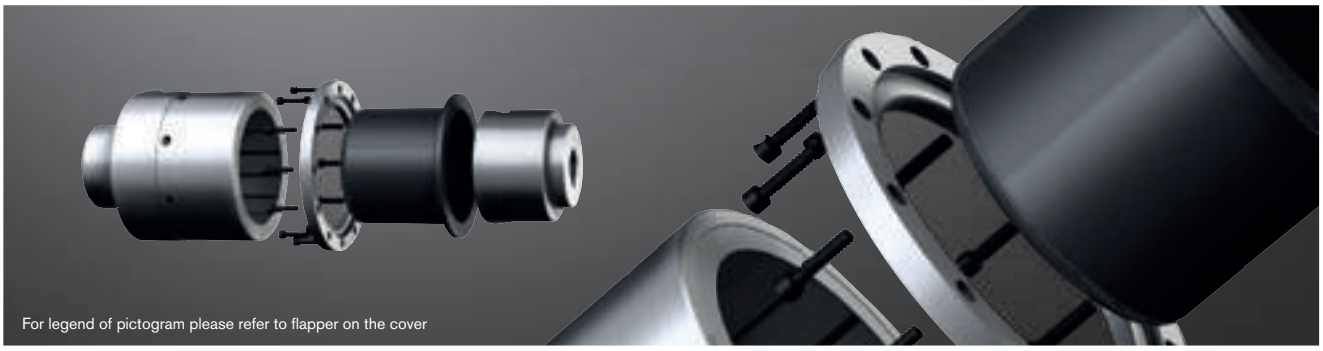

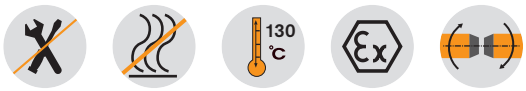

Technical data – Internal rotor and containment shroud

Size	T_K max. [Nm] with ~ 20 °C	Dimensions [mm]												
		Internal rotor							Containment shroud					
		Finish bore [1] di		D_{I1}	L_{I1}	G_I	S_I		D_{S1}	D_{S2}	D_{S3}	D_{S4}	Z_S	$L_S = L_{total}$
		min.	max.				min.	max.						
SA 75/10	10				39,5		8,5	54,5						108
SB 75/10	24	12	32	45	58	M6		34,5	99,9	115	135	9	8	
SC 75/10	40				80		5,5	10,0						
SA 110/16	30				45			46,0						115
SB 110/16	70	14	55	80	65	M8	4	26,0	140	151	168	9	12	
SC 110/16	100				85			6,0						
SB 135/20	110				65			48,0						144
SC 135/20	155	20	70	90	85	M10	4	28,0	157	167	180	5,5	12	
SD 135/20	210				110			4,0						
SC 165/24	220				85		4	32,0						156
SD 165/24	300	24	80	110	110	M12		8,0	196	210	225	6,6	12	
SE 165/24	390				130		-5	-5,0						165

Technical data – External rotor, flange hub and general

Size	Dimensions [mm]													
	External rotor					Flange hub						General		
	D_{A1}	D_{A2}	D_{A3}	L_{A1}	G_A	Max. finish bore [1] d_f	D_{F1}	D_{F2}	L_{F1}	L_{F2}	G_F	ΔS	Total length* (incl. flange hub)	
													min.	max.
SA 75/10				41,3								12,2	148,5	172,5
SB 75/10	90	100	110	61,3	M6	42	60	114	64,5	35,5	M8		148,5	172,5
SC 75/10				83,8								14,2	168	172,5
SA 110/16				41,3									165,5	193,5
SB 110/16	130	138	150	61,3	M6	55	85	153	87,5	45,5	M10	18,7	172,5	193,5
SC 110/16				81,3									191,5	193,5
SB 135/20				70,3								18,2	216	225,5
SC 135/20	158	167	176	90,3	M6	70	100	176	89	67	M12		216	225,5
SD 135/20				110,3								20,7	224	224
SC 165/24				90,3								18,5	231	234,8
SD 165/24	186	195	204	110,3	M6	75	110	204	94	70	M16	21	231	233,3
SE 165/24				130,3									254,3	254,3

[1] Bore H7 with keyway to DIN 6885, sheet 1 [JS9]

Technical data

Size	T_K max. [Nm] with 20 °C	Internal rotor		Containment shroud				External rotor (+ optional flange hub)	
		Standard material		Standard material		Max. pressure	Max. temperature	Standard material	
		Hub	Magnets	Hub	Cont. shroud	$P_N/P_{max.}$ [bar]	$t_{max.}$ [°C]	Hub	Magnets
SA 75/10	10	1.4571	Sm2Co17	Aluminium	PEEK	s. table	s. table	S355J2G3	NdFeB
SB 75/10	24	1.4571	Sm2Co17	Aluminium	PEEK	s. table	s. table	S355J2G3	NdFeB
SC 75/10	40	1.4571	Sm2Co17	Aluminium	PEEK	s. table	s. table	S355J2G3	NdFeB
SA 110/16	30	1.4571	Sm2Co17	Aluminium	PEEK	s. table	s. table	S355J2G3	NdFeB
SB 110/16	70	1.4571	Sm2Co17	Aluminium	PEEK	s. table	s. table	S355J2G3	NdFeB
SC 110/16	100	1.4571	Sm2Co17	Aluminium	PEEK	s. table	s. table	S355J2G3	NdFeB
SB 135/20	110	1.4571	Sm2Co17	Aluminium	PEEK	s. table	s. table	S355J2G3	NdFeB
SC 135/20	155	1.4571	Sm2Co17	Aluminium	PEEK	s. table	s. table	S355J2G3	NdFeB
SD 135/20	210	1.4571	Sm2Co17	Aluminium	PEEK	s. table	s. table	S355J2G3	NdFeB
SC 165/24	220	1.4571	Sm2Co17	Aluminium	PEEK	s. table	s. table	S355J2G3	NdFeB
SD 165/24	300	1.4571	Sm2Co17	Aluminium	PEEK	s. table	s. table	S355J2G3	NdFeB
SE 165/24	390	1.4571	Sm2Co17	Aluminium	PEEK	s. table	s. table	S355J2G3	NdFeB

Ordering example:

MINEX® SB 75/10	NdFeB	d_i Ø20mm	d_a Ø24mm	PEEK
Coupling size	NdFeB – $t_{max.}$ = 150 °C Sm2Co17 – $t_{max.}$ = 300 °C	Finish bore (H7), feather keyway acc. to DIN 6885 sheet 1 (JS9)		Containment shroud type

Examples of application

MINEX® couplings with containment shroud made of PEEK are an economic, energy-efficient alternative to the types made of metal. They do not generate any eddy current losses and as a result do not generate any heat so that usually expensive cooling measures can be done without. Moreover, they are characterized by low susceptibility to fracture, low weight and easy handling. They are ideally suitable for applications with low demands on temperature and pressure resistance.

Typical applications: vacuum pumps, fan drives, compressors, agitators, PU foaming lines.

Depending on pressure and temperature resistance

Temperature [°C]	Perm. nominal/testing pressure	
	P_N [bar]	P_{MAX} [bar]
40	14	21
70	13	19,5
100	12	18
130	10	15

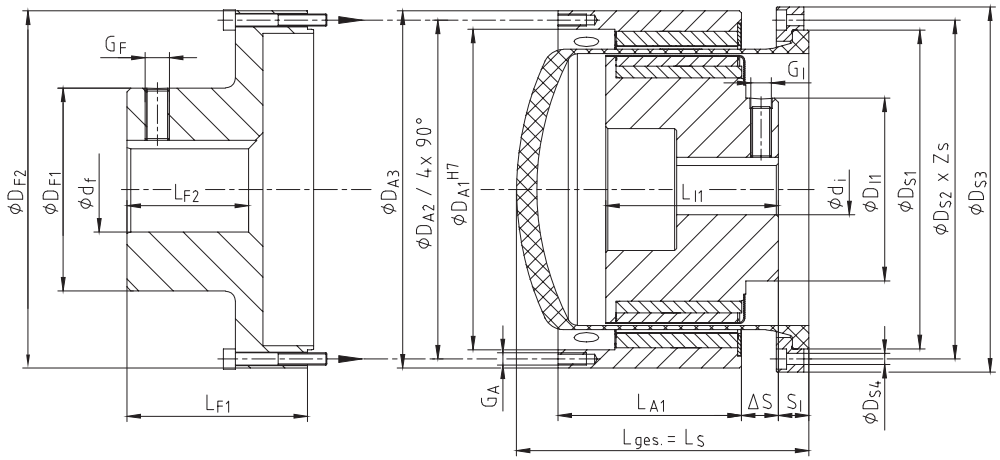

$S_A = S_I + \Delta S$

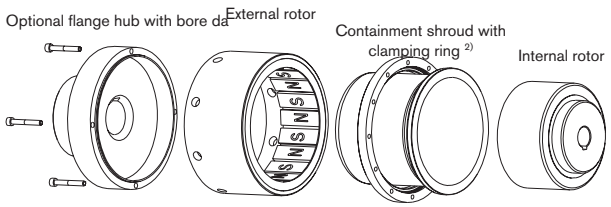

2) Containment shroud size 75 also available as a single-part design!

Use in potentially explosive atmospheres

MINEX® couplings with containment shrouds made of carbon fibre reinforced PEEK are suitable for power transmission on drives used in potentially explosive atmospheres. They are certified and confirmed according to EC directive 94/9/EC (ATEX 95) as components of category II and thus suitable for the use in potentially explosive atmospheres of zone 2G.



Ex II 2G c IIC T X

If the couplings operate in potentially explosive atmospheres, the user has to provide for special measures. Please read through the information included in the respective Type Examination Certificate and the operating and mounting instructions at www.ktr.com.

Containment shroud – material oxide ceramics

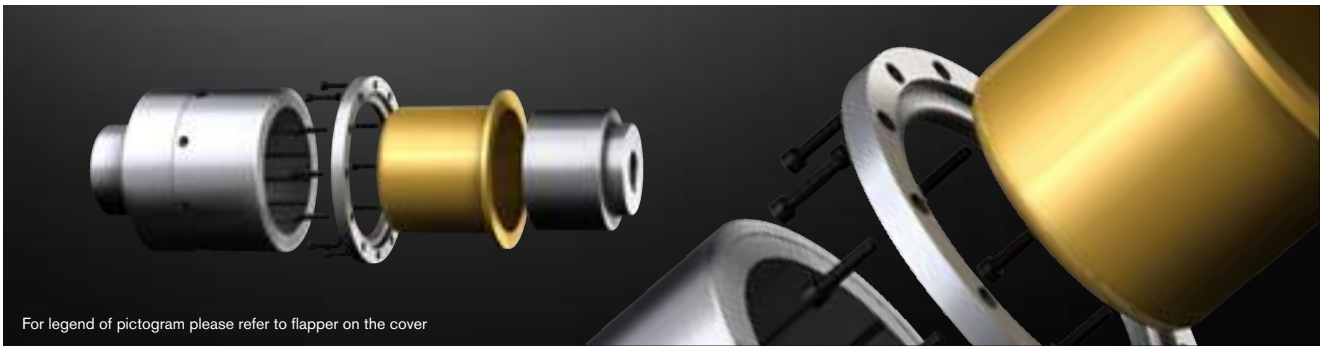

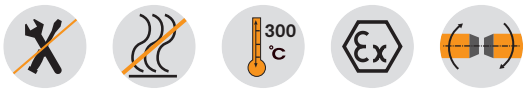

Technical data – Internal rotor and containment shroud

Size	T_K max. [Nm] with ~ 20 °C	Dimensions [mm]												
		Internal rotor							Containment shroud					
		Finish bore [1] d_i		D_{I1}	L_{I1}	G_I	S_I		D_{S1}	D_{S2}	D_{S3}	D_{S4}	Z_S	$L_S = L_{total}$
		min.	max.				min.	max.						
SA 110/16	30				45			48,0						
SB 110/16	70	14	55	72	65	M8	4	28,0	132	151	168	9	12	115
SC 110/16	100				85			9,0						
SB 135/20	110				65			46.5						
SC 135/20	155	20	70	90	85	M10	4	26,5	157	167	180	5,5	12	143
SD 135/20	210				110			4,0						
SC 165/24	220				85			28,0						150
SD 165/24	300	24	90	110	110	M12	4	4,0	196	210	225	6,6	12	
SE 165/24	390				130			17,0						185
SD 200/30	430	38	90	130	135	M16	4	4,0	229	246	265	9	12	185
SE 200/30	550													

Technical data – External rotor, flange hub and general

Size	Dimensions [mm]													
	External rotor					Flange hub						General		
	D_{A1}	D_{A2}	D_{A3}	L_{A1}	G_A	Max. finish bore [1] d_f	D_{F1}	D_{F2}	L_{F1}	L_{F2}	G_F	ΔS	Total length* (incl. flange hub)	
													min.	max.
SA 110/16				41,3									165,5	195,5
SB 110/16	130	138	150	61,3	M6	55	85	153	87,5	45,5	M10	18,7	171,5	195,5
SC 110/16				81,3									191,5	196,5
SB 135/20				70,3								18,2	215	224
SC 135/20	158	167	176	90,3	M6	70	100	176	89	67	M12		215	224
SD 135/20				110,3								20,7	220	220
SC 165/24				90,3								18,5	225	230,5
SD 165/24	186	195	204	110,3	M6	75	110	204	94	70	M16	20,7	229	229
SE 165/24				130,3									260	260
SD 200/30	220	230	240	130,3	M6	80	120	240	120	88	M16	25,7	280	280
SE 200/30														

* Total length excl. flange hub = LS

Technical data

Size	T_K max. [Nm] with 20 °C	Internal rotor			Containment shroud			External rotor (+ optional flange hub)		
		Standard material		Max. temperature	Standard material		Max. pressure	Standard material		Max. temperature
		Hub	Magnets	$t_{max.}$ [°C]	Hub	Cont. shroud	$P_N/P_{max.}$ [bar]	Hub	Magnets	$t_{max.}$ [°C]
SA 110/16	25	1.4571	Sm2Co17	300	Aluminium	ZrO2MgO	25/37,5	S355J2G3	Sm2Co17	300
SB 110/16	60	1.4571	Sm2Co17	300	Aluminium	ZrO2MgO	25/37,5	S355J2G3	Sm2Co17	300
SC 110/16	95	1.4571	Sm2Co17	300	Aluminium	ZrO2MgO	25/37,5	S355J2G3	Sm2Co17	300
SB 135/20	100	1.4571	Sm2Co17	300	Aluminium	ZrO2MgO	25/37,5	S355J2G3	Sm2Co17	300
SC 135/20	145	1.4571	Sm2Co17	300	Aluminium	ZrO2MgO	25/37,5	S355J2G3	Sm2Co17	300
SD 135/20	200	1.4571	Sm2Co17	300	Aluminium	ZrO2MgO	25/37,5	S355J2G3	Sm2Co17	300
SC 165/24	210	1.4571	Sm2Co17	300	Aluminium	ZrO2MgO	25/37,5	S355J2G3	Sm2Co17	300
SD 165/24	280	1.4571	Sm2Co17	300	Aluminium	ZrO2MgO	25/37,5	S355J2G3	Sm2Co17	300
SE 165/24	370	1.4571	Sm2Co17	300	Aluminium	ZrO2MgO	25/37,5	S355J2G3	Sm2Co17	300
SD 200/30	430	1.4571	Sm2Co17	300	Aluminium	ZrO2MgO	25/37,5	S355J2G3	Sm2Co17	300
SE 200/30	550	1.4571	Sm2Co17	300	Aluminium	ZrO2MgO	25/37,5	S355J2G3	Sm2Co17	300

Ordering example:

MINEX® SB 135/20	NdFeB	d_i Ø20mm	d_a Ø24mm	Oxidkeramik ZrO_2MgO
Coupling size	NdFeB – $t_{max.}$ = 150 °C Sm2Co17 – $t_{max.}$ = 300 °C	Finish bore (H7), feather keyway acc. to DIN 6885 sheet 1 (JS9)		Containment shroud type

Examples of application

Like with the types with containment shroud made of PEEK, MINEX® couplings with containment shroud made of ceramics are an economic, energy-efficient alternative to the types made of metal. Again they do not generate any eddy current losses and as a result do not generate any heat so that usually expensive cooling measures can be done without. Compared to PEEK, the containment shrouds made of ceramics are characterized by higher resistance to pressure and an excellent temperature resistance.

Typical applications: vacuum pumps, fan drives, compressors, agitators, PU foaming lines.

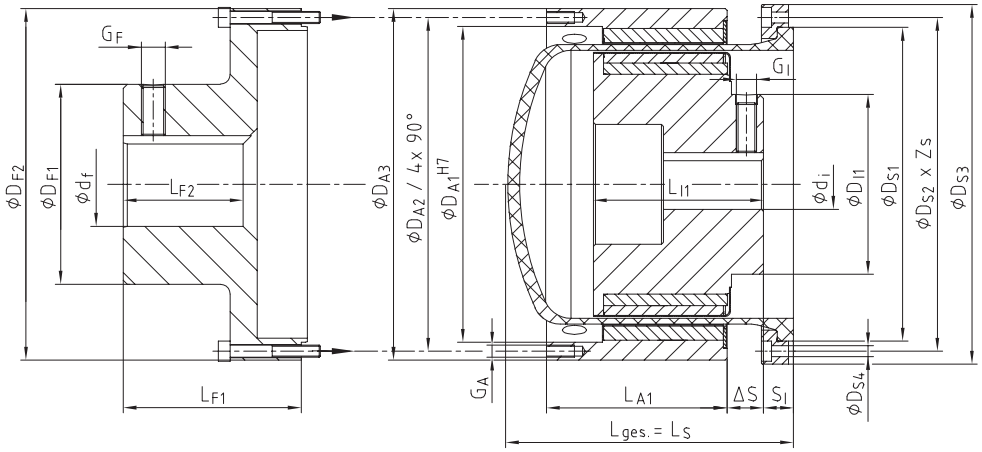

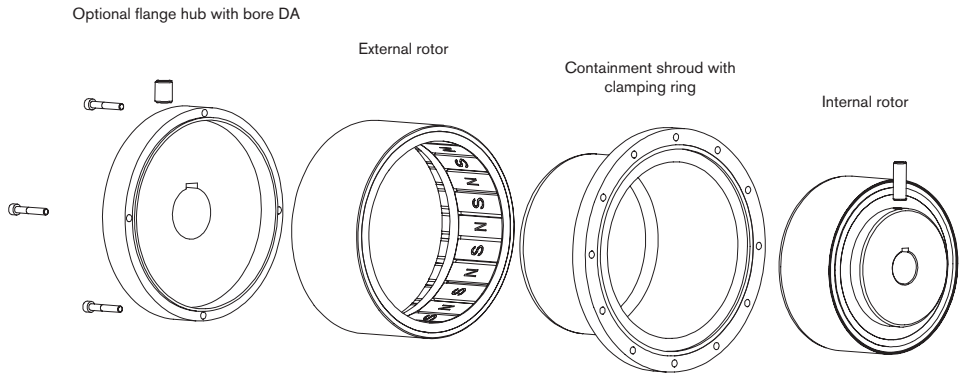

Use in explosive applications

MINEX® couplings with containment shrouds made of oxide ceramics are suitable for power transmission in drives used in potentially explosive atmospheres. They are certified and confirmed according to EC directive 94/9/EC (ATEX 95) as components of category II and thus suitable for the use in hazardous locations of zone 2G.

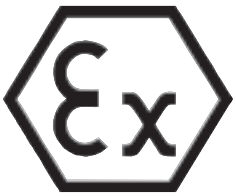

Ex II 2G c IIC T X

Please read through our information included in the respective Type Examination Certificate and the operating and mounting instructions at www.ktr.com.

Conversion kits and customized component assemblies

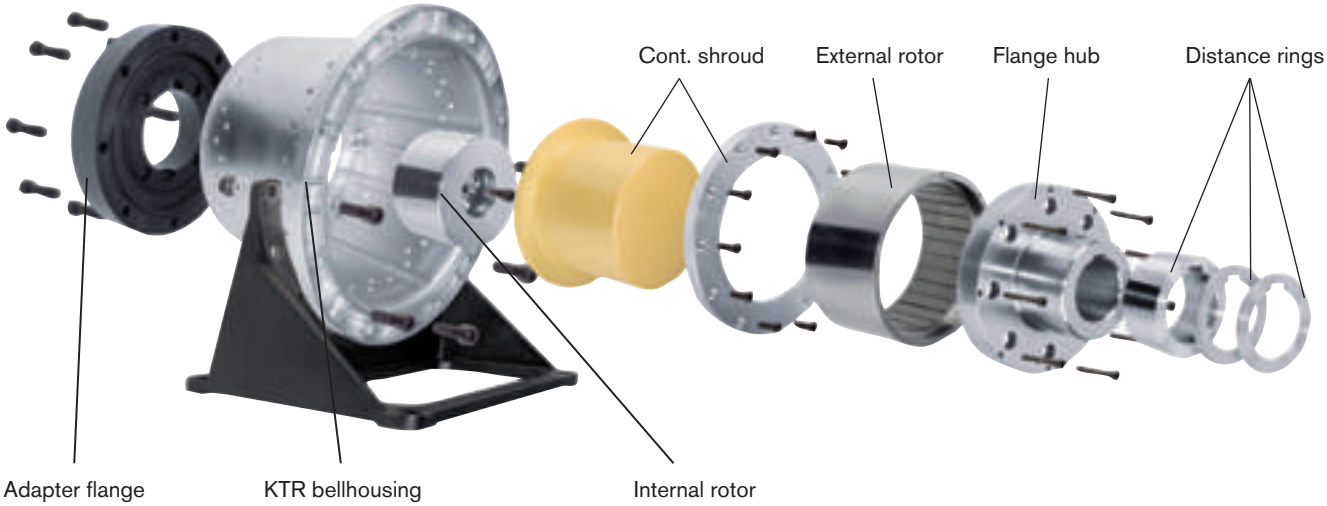

On request KTR can offer customer-specific solutions in combination with hydraulic components from KTR, whereby existing systems can be easily retrofitted with MINEX®-S.

Conversion kits for PUR foaming processes

Conveying and proportioning the media polyol and isocyanate in the processing plants for PUR, ambient air has to be prevented from penetrating into the process, since otherwise unrequested reactions may be generated.
For a reliable sealing of such drives KTR offers standard conversion kits, among others for axial piston pumps types REXROTH A2VK and ROTARY POWER C series offering the following benefits:

- Maintenance-free operation
- Standstill periods are considerably reduced
- No more problems with sealing
- Better efficiency and process safety

The assemblies are available for all motor-pump-combinations and in various materials.



Maintenance-free sealing of dosing pumps for polyde and isocyanate in high-pressure reaction casting machines

Pump data		Motor data (4 poles, n=1500 RPM)			Coupling data		
Pump	Type	Engine	Power [kW]	Torque T_N	Size	Max. torque $T_{k\ max.}$	Bellhousing
REXROTH A2VK	A2VK-12	132 S	5,5	35 Nm	SB 110/16	60 Nm	PL 300/13/…
		132 M	7,5	48 Nm	SC 110/16	95 Nm	
		160 M	11	70 Nm	SC 135/20	145 Nm	PL 350/7…
	A2VK-28	160 M	11	70 Nm	SC 135/20	145 Nm	
		160 L	15	96 Nm	SD 135/20	200 Nm	
		180 M	18,5	118 Nm	SD 135/20	200 Nm	
	A2VK-55	160 L	15	96 Nm	SC 165/24	210 Nm	PL 350/7/…
		180 M	18,5	118 Nm	SC 165/24	210 Nm	
		180 L	22	144 Nm	SD 165/24	280 Nm	PL350/7/…
		200 L	30	196 Nm	SE 165/24	280 Nm	PL400/5/…
		225 S/M	37/45	240/292 Nm	SE 165/24	370 Nm	PL450/3/…
	A2VK-107	225 S/M	37/45	240/292 Nm	SE 165/24	370 Nm	PL400/5/…
ROTARY POWER C-Range	C 01	100L	2,2	14 Nm	SB 75/10	24 Nm	PK 250/13/…
	C 04	132 M	7,5	48 Nm	SC 110/16	95 Nm	PL300/13/…
	C 07	132 S	5,5	35 Nm	SB 110/16	60 Nm	PL300/13/…
		132 M	7,5	48 Nm	SC 110/16	95 Nm	PL300/13/…
	C20	160 L	15	96 Nm	SD 135/20	200 Nm	PL 350/7/…
		180 M	18,5	118 Nm	SD 135/20	200 Nm	PL 350/7/…

Other types

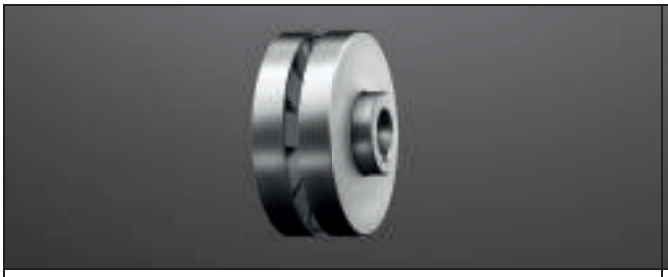

Disk coupling
With this type the magnets are arranged opposite to each other in axial direction. This type is beneficial if there is only little axial mounting space and a flat separating wall between the rotors is requested.

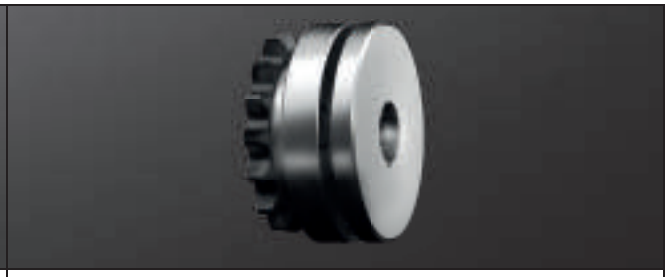

Hysteresis coupling MINEX®-H
Different from the MINEX®-S magnetic coupling this type switches to slipping operation once the maximum transmittable torque has been achieved, while it continues to transmit T_{max} as a holding torque. Applications: roll conveyors, winder drives, etc.

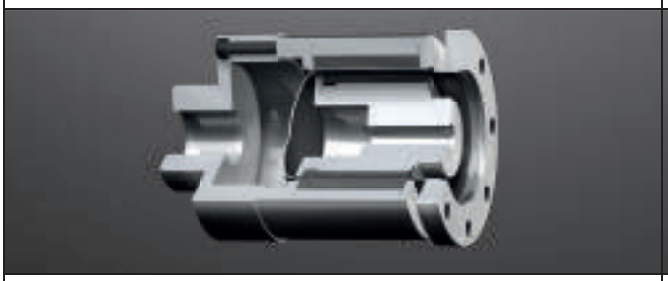

MINEX®-S completely made of stainless steel
If requested, KTR supplies MINEX®-S completely made of stainless steel. The magnets of the driven-sided internal rotor are completely encapsulated. Applications: roll conveyors, winder drives, etc.



Customized special solutions
If requested, KTR supplies MINEX®-S in combination with the slide bearing required for the driven shaft.

Use of MINEX®-S on a small centrifugal pump



MINEX®-S for sealing homogenizers for heavy oil processing in marine operation

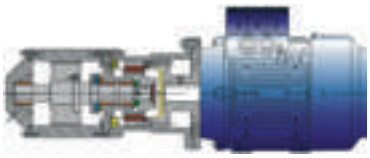

Retrofitting of a gear pump with MINEX® SA 75/10, Bellhousing PK 200/30, foot flange and damping rod



MINEX®-S for sealing of autoclaves (T.B.M. / STERICHEM) in laboratories and hospitals

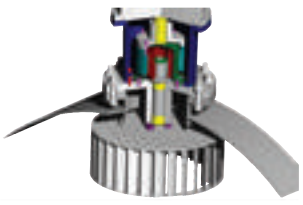

Technical data for coupling selection/selection of components

Motor type	_____	Pump type	_____
Driving power	_____ kW	Speed	_____ rpm
Pressure	_____ bar	Temperature	_____ °C
Viscosity of medium	_____ mm²/s	Max. perm. dimensions	_____ ØD x L_{total}



Torque Limiters

Types and operating description 230
Selection of torque limiters 231

RUFLEX®
Structure and operation 232
Standard 233
With sprocket 234
Max. type 235
With torsionally flexible ROTEX® 236
With torsionally rigid BoWex® 237

KTR-SI
Structure and operation 238
Operating principles 240
KTR-SI flange type 241
With torsionally flexible ROTEX® 242
KTR-SI FRE flange type 243
KTR-SI FRE with torsionally flexible ROTEX® 244
KTR-SI special types 245

SYNTEX®
Structure and operation 246
Operating principles 247
Flange type 248
With sprocket 250
With toothed belt pulley 252
With backlash-free ROTEX® GS 253

SYNTEX®-NC / KTR-SI Compact
SYNTEX®-NC 254
Hub type 256
With backlash-free ROTEX® GS 257
With torsionally rigid TOOLFLEX® S 258

KTR-SI Compact
Flange type 259
With backlash-free ROTEX® GS 260

RUFLEX® **KTR-SI** **SYNTEX®** **SYNTEX®-NC** **KTR-SI Compact**



Properties of torque limiters

						
Product	**RUFLEX®**	**KTR-SI**	**KTR-SI FRE**	**SYNTEX®**	**SYNTEX®-NC**	**KTR-SI Compact**
Type	Torque limiter	Overload system	Overload system	Backlash-free overload system		
Torque limitation						
Friction (load-keeping)	●					
Ratchet coupling						
Synchronous ratching SK/SR (load-separating)		●		●	●	●
Ratching DK (load-separating)		●		●	●	●
Idle rotation FR/FRE (load-separating)		●	●			
Fail-safe SGR (no mechanical separation)		●				
Properties						
Backlash-free				●	●	●
High repeating accuracy		●	●	●	●	●
Quick separation with overload					●	●
Signal by limit switch/sensor		●	●	●	●	●
Torque setting while in place	●	●	●	●	●	●
Torque range TKN [Nm]						
min. - max.	0,5 - 12.000	2,5 - 8.200	60.000 (and higher)	6 - 400	5 - 550	3 - 3.100
Max. bore [mm]						
	140	100	200 (and higher)	50	60	80
Shaft-hub-connection						
Positive locking (type 1.0)	●	●	●	●	●	●
Frictionally engaged (type 4.5/6.1)				●	●	●
Speed n max. [RPM]						
	10.000	5.000	3.300	1.500	3.000	4.000
Special features						
	High power density, low price	Hardened surfaces, solid design	Modular design, for high torques	For tailor-made solutions, low cost, ideally suitable for higher quantities	High power density, light-weight design	Hardened surfaces, solid design
Applications						
	Slowly rotating drives such as sprocket or toothed belt drives, conveyors, rotary feeders, …	Rugged drive situations, e. g. crushers, …	Shredders, extruders, steel mills, test benches	Customized design, packaging machines, linear drives,…	Dynamic drives, packaging machines, machine tools, linear drives,…	Packaging machines, special purpose machines, conveyor technology…

● ≈ Standard

TORQUE LIMITERS
TYPES AND OPERATING DESCRIPTION

Product finder of torque limiters

	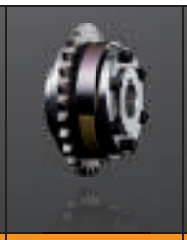					
Product	**RUFLEX®**	**KTR-SI**	**KTR-SI FRE**	**SYNTEX®**	**SYNTEX®-NC**	**KTR-SI Compact**
Type	Torque limiter	Overload system	Overload system	Backlash-free overload system		
Types (extract)						
Combined with:						
» Sprocket / toothed belt pulley / flange	●	●		●	●	●
» ROTEX®	●	●	●			
» BoWex®	●					
» TOOLFELX®					●	
» ROTEX® GS				●	●	●
Integrated ball bearing			●		●	●

● ≈ Standard

Information on selection of torque limiters

To make sure that the torque limiter is not released with torque peaks related to the process, the switching torque of the coupling should at least be 30 % above the maximum operating torque (see diagramme).

Torque limiters and overload systems that re-engage automatically should be used with reduced speed only after having applied higher release torques.
Frequent or continuous slipping or ratching increases the wear on the torque limiter.

After the torque limiter separated driving from driven side in case of overload, it may take some time before the drive stops due to large inertias in the drive train.This may cause higher wear on the torque limiter and the overload system re-engaging automatically. That is why we recommend to use the overload system KTR-SI as an idle rotating type (page 238 et seqq.) for drives with larger inertias or higher speeds.

We basically recommend electronic control of the torque limiters to disconnect the drive immediately in case of overload.

We will be pleased to assist you with technical questions about the selection of torque limiters.
For that purpose we dispose of state-of-the-art simulation and calculation programs. Here the principle applies: The more detailed the data provided, the more accurate are the calculation results.

A smooth operation is only ensured if the overload torque set exceeds the maximum operating torque of the machine (see diagramme below).

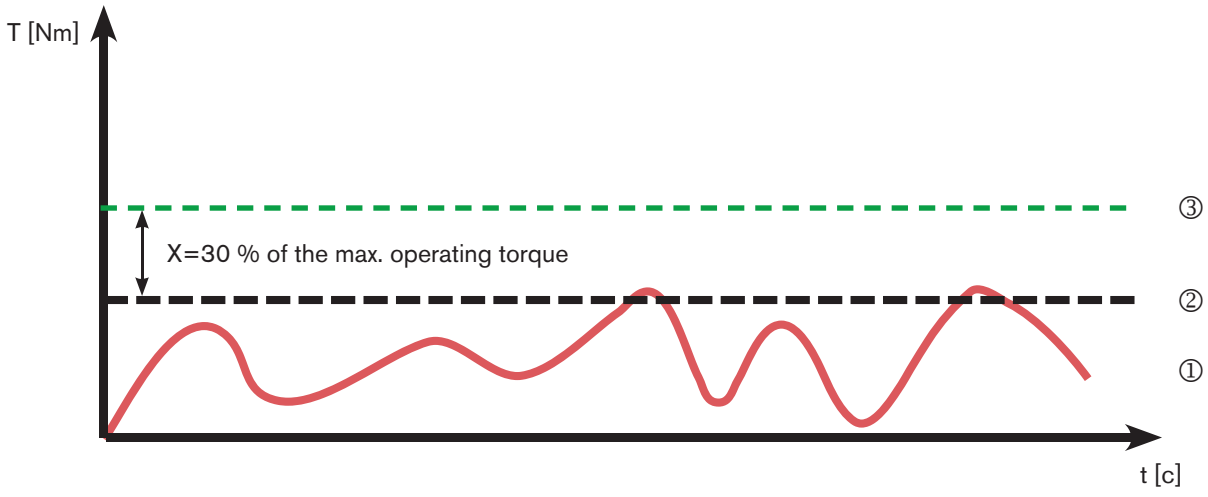

① Torque curve of the machine
② Max. operating torque arising on the machine
③ Torque of the coupling set

Structure and operation

- Overload protection up to 12000 Nm (standard)
- Available with integrated sprocket
- Asbestos-free and rust-proof friction lining for dry running (ATEX available on request)
- High wear capacity, long service life
- High-quality slide bush with dry-film lubricant
- Torque setting while in place



- Securing of the nut by locking in 12 different positions
- Easy assembly and torque setting
- Coupling components made of steel, high safety reserves
- Corrosion protection by zinc-coated and passivated surfaces
- Rust-proof and acid-proof type on request
- High power density due to high-quality disk springs and frictions linings

The RUFLEX® modular system provides solutions for your drive, too.
The combination with the approved KTR couplings and the integration of customer-specific drive components (e. g. sprockets) allows for an overload protection optimally adapted to every application.
Various layers of disk springs and high-quality friction linings ensure a high power density even with only few mounting space.

RUFLEX® consists of the following components:

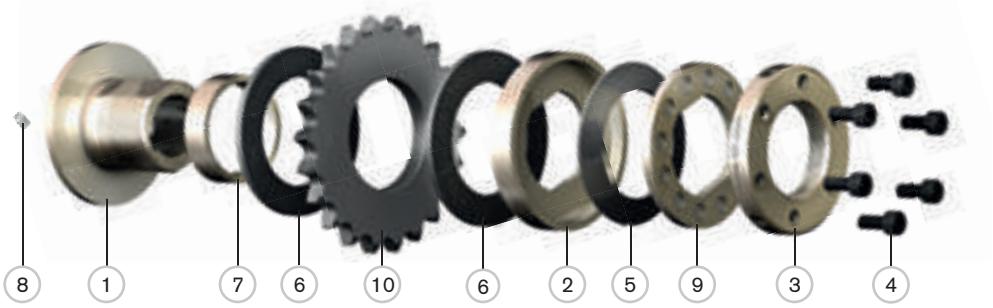

List of components:

1. Hub
2. Thrust washer
3. Setting nut
4. Torque setting screws
5. Disk spring
6. Friction lining
7. Slide bush
8. Setscrew
9. Locking washer
10. Drive component (e. g. sprocket)

Layers of disk springs:



1 TF
- Small specific load on the friction linings
- For small to average torques
- Long service life of friction linings



2 TF
- Average specific load on the friction linings
- Average wear and decrease of torque with longer slipping periods
- Double torque due to double layer of the disk springs



3 TF
- High specific load on the friction linings
- High wear and decrease of torque with longer slipping periods
- Suitable only in special cases for designs with only limited dimensions



1 TFD
- Small specific load on the friction linings
- Torques like with type 1 TF
- Only small decrease of the torque even with longer period of friction
- Precision torque adjustment due to a double spring excursion



2 TFD
- Average specific load on the friction linings
- Torques like with type 2 TF
- Only small decrease of the torque even with longer period of friction
- Precision torque adjustment due to a double spring excursion

Standard width of drive component

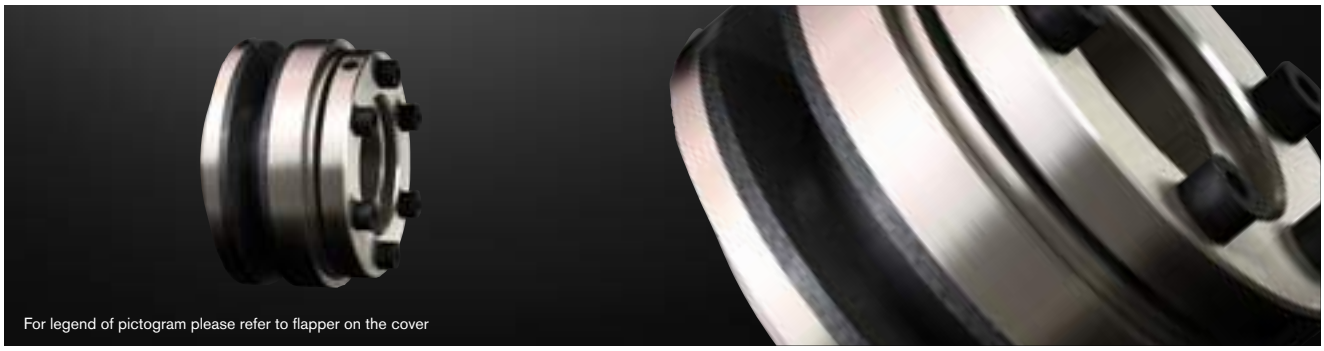

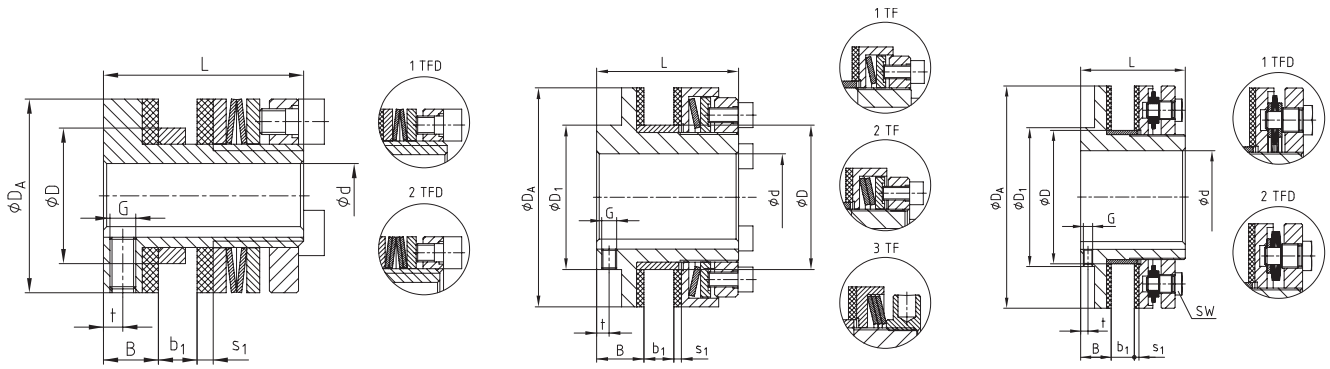

Size 00 | Size 0 - 5 | Size 6 - 9

Technical data – Dimensions

Size	Max. speed4) [RPM]	Torques [Nm]			Dimensions [mm]											
					Bore d						Drive component b1				Setscrew	
		1TF	2TF	3TF 3)	pilot b.	max.	D 2)	D_1	D_A	B	min.	max.	s_1	L	t	G
00	10000	0,5-3	1-5	–	–	10	21	30	30	8,5	2	6	2,5	31	3	M4
0	8500	2-10	4-20	–	–	20 1)	35	45	45	8,5	2	6	2,5	33	3	M4
01	6600	5-35	10-70	–	–	22	40	40	58	16	3	8	3	45	4	M5
1	5600	20-75	40-150	130-200	–	25	44	45	68	17	3	10	3	52	5	M5
2	4300	25-140	50-280	250-400	–	35	58	58	88	19	4	12	3	57	5	M6
3	3300	50-300	100-600	550-800	–	45	72	75	115	21	5	15	4	68	5	M6
4	2700	90-600	180-1200	1100-1600	–	55	85	90	140	23	6	18	4	78	5	M8
5	2200	400-800	800-1600	1400-2100	–	65	98	102	170	29	8	20	5	92	8	M8
6	1900	300-1200	600-2400	–	38	80	116	120	200	31	8	23	5	102	8	M8
7	1600	600-2200	1200-4400	–	45	100	144	150	240	33	8	25	5	113	8	M10
8	1300	900-3400	1800-6800	–	58	120	170	180	285	35	8	25	5	115	8	M10
NEW 9	1000	2500-6000	6000-12000	–	65	140	237	225	350	53	16	28	6	162	11	M12

1) Finish bore exceeding Ø19, keyway to DIN 6885 sheet 3
2) Bore tolerance (drive component): F8 with size 00-4, H8 witht size 5-8
3) With clamping setting nut, to be used on types with limited dimensions only
4) See comments on page 230

On request:

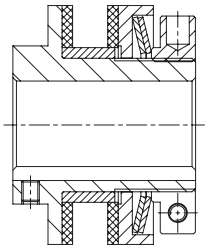

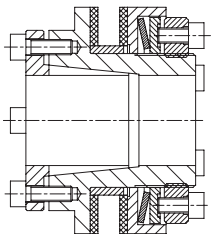

- with clamping setting nut for size 00 – 5 (standard with 3TF)
- for radial torque setting
- with taper bush (hub design 4.5)
- frictionally engaged shaft-hub-connection

Ordering example:	RUFLEX® 1	2TF	b_1 10	d Ø20
	Type / size	Disk spring layer	Width of drive component b_1	Finish bore

With sprocket





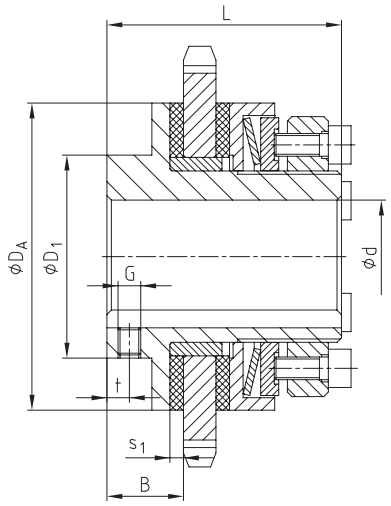

Technical data – Dimensions

Size[4]	Max. speed [3] [RPM]	Torques [Nm]			Dimensions [mm]								
					Max. bore	D_1	D_A	B	s_1	L	Setscrew		Standard sprocket [2]
		1TF	2TF	3TF [1]	d						t	G	
01	6600	5-35	10-70	–	22	40	58	16	3	45	4	M5	06B-1 ($^3/_8$ x $^7/_{32}$) z = 23
1	5600	20-75	40-150	130-200	25	45	68	17	3	52	6	M5	08B-1 ($^1/_2$ x $^5/_{16}$) z = 22
2	4300	25-140	50-280	250-400	35	58	88	19	3	57	6	M6	08B-1 ($^1/_2$ x $^5/_{16}$) z = 27
3	3300	50-300	100-600	550-800	45	75	115	21	4	68	6	M6	12B-1 ($^3/_4$ x $^7/_{16}$) z = 22

[1] With clamping setting nut to be used on types with limited dimensions only
[2] Minimum number of teeth required / Other sprockets available on request
[3] See comments on page 230
[4] Weitere Größen auf Anfrage

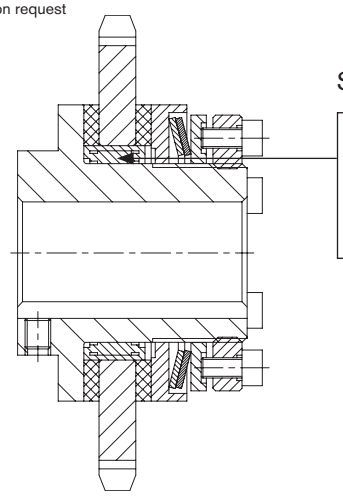

Special type:

- Available with needle bearing instead of slide bush on request
- For high radial load on the sprocket
- For high speeds or long slipping periods

Ordering example:

RUFLEX® 1	2TF	d Ø20	08B-1 ($^1/_2$ x $^5/_{16}$), z=29	100 Nm
Type / size	Disk spring layer	Finish bore	Sprocket	Torque set

Max. type

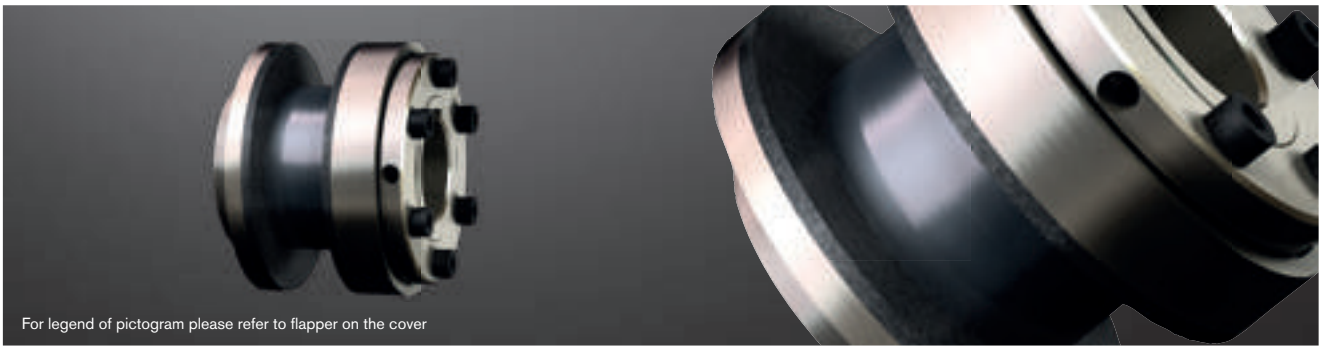



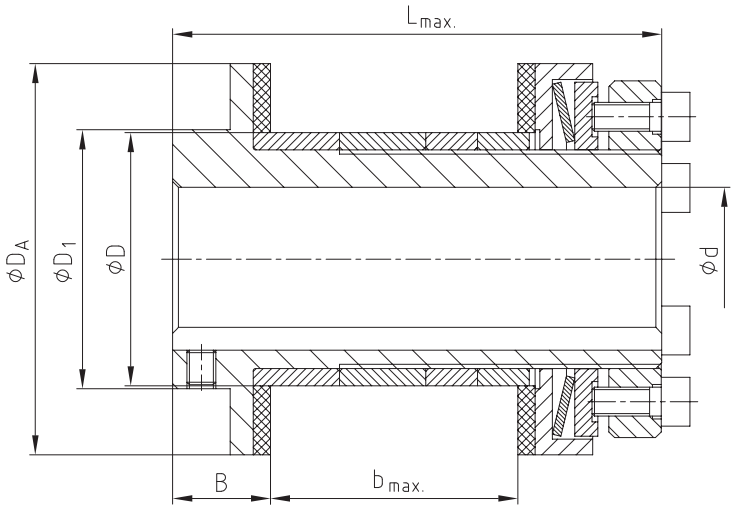

Technical data – Dimensions

Size	Max. speed [3] [1/min]	Torques [Nm]			Dimensions [mm]						
					Max. bore	D_1	D_A	B	Maximum b	D [1]	Maximum L
		1TF	2TF	3TF [2]	d						
01	6600	5-35	10-70	–	22	40	58	16	33	40	70
1	5600	20-75	40-150	130-200	25	45	68	17	43	44	85
2	4300	25-140	50-280	250-400	35	58	88	19	54	58	100
3	3300	50-300	100-600	550-800	45	75	115	21	62	72	115
4	2700	90-600	180-1200	1100-1600	55	90	140	23	91,5	85	154

[1] Bore tolerance (drive component): F8
[2] With clamping setting nut, to use only for designs with limited dimensions
[3] See comments on page 230

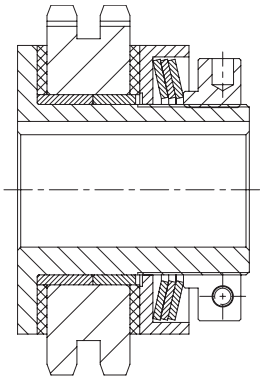

Example:

- RUFLEX® max. with sprocket assembled
- Available as a complete component assembly with torque preset

Ordering example:	RUFLEX® max. 1	2TF	b 35	d Ø20
	Type / size	Disk spring layer	Width of drive component b	Finish bore

With torsionally flexible ROTEX®





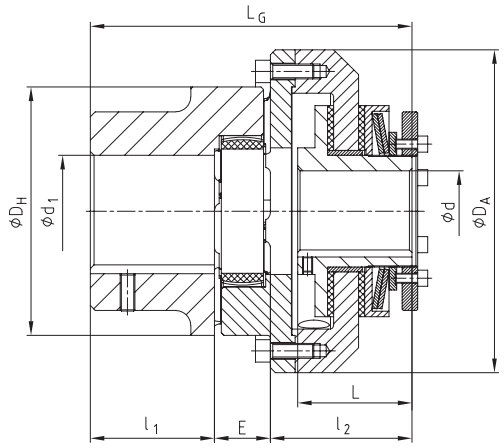

Technical data – Dimensions

RUFLEX® size	ROTEX® size	RUFLEX® torques [Nm]			ROTEX® torques [Nm][3]		Dimensions [mm]									
					98 Shore-A		Bore d		Max. bore							
		1TF	2TF	3TF [2]	T_{KN}	T_{Kmax}	pilot b.	max.	d_1	D_H	D_A	l_1	l_2	E	L	L_G
00	14	0,5-3	1-5	–	12,5	25	–	10	16	30	44	11	35	13	31	59
0	19	2-10	4-20	–	17	34	–	20 [1]	25	40	63	25	37	16	33	78
01	24	5-35	10-70	–	60	120	–	22	35	55	80	30	50	18	45	98
1	28	20-75	40-150	130-200	160	320	–	25	40	65	98	35	58	20	52	113
2	38	25-140	50-280	250-400	325	650	–	35	48	80	120	45	64	24	57	133
3	48	50-300	100-600	550-800	525	1050	–	45	62	105	162	56	82	28	68	166
4	75	90-600	180-1200	1100-1600	1920	3840	–	55	95	160	185	85	80	40	78	205
5	90	400-800	800-1600	1400-2100	3600	7200	–	65	110	200	260	100	114	45	92	259
6	100	300-1200	600-2400	–	4950	9900	38	80	115	225	285	110	130	50	102	290
7	110	600-2200	1200-4400	–	7200	14400	45	100	125	255	330	120	142	55	113	317
8	140	900-3400	1800-6800	–	12800	25600	58	120	160	372	410	115	65	155	152	372

[1] Finish bore exceeding Ø19, feather keyway acc. to DIN 6885 sheet 3
[2] With clamping setting nut, to use only for designs with limited dimensions
[3] See selection of ROTEX couplings on page 10 et seqq.

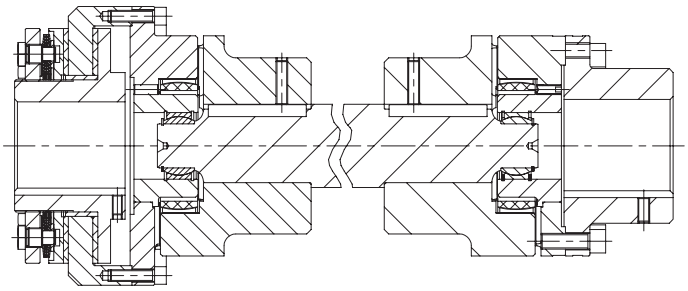

Special type:

- RUFLEX® as intermediate shaft coupling
- For large shaft distance dimensions
- Available in combination with ROTEX® or RADEX®-N steel lamina coupling

Ordering example:

RUFLEX® 1	2TF	d Ø20	ROTEX® 28	98 Sh-A	d_1 Ø25	100 Nm
Type / size	Disk spring layer	RUFLEX® bore	Type / size	Spider	ROTEX® bore	Torque set

With torsionally rigid BoWex®





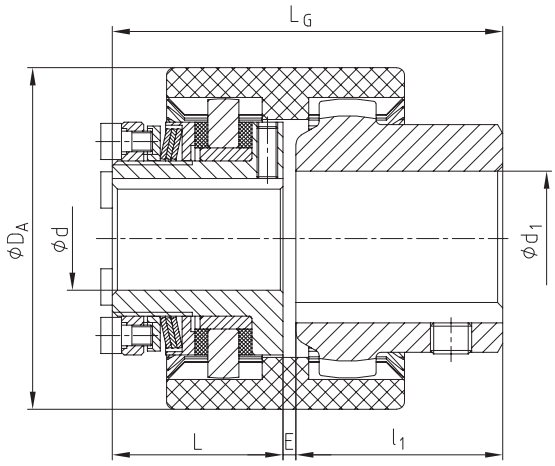

Technical data – Dimensions

RUFLEX® size	BoWex® size	RUFLEX® torques [Nm]			BoWex® torques [Nm] 3)		Dimensions [mm]						
							Max. bore						
		1TF	2TF	3TF 2)	T_{KN}	$T_{K\,max.}$	d	d_1	D_A	l_1	L	E	L_G
00	19	0,5-3	1-5	–	16	32	10	19	48	25,0	31	2,5	58,5
0	28	2-10	4-20	–	45	90	20 1)	28	66	40,0	33	2,5	75,5
01	38	5-35	10-70	–	80	160	22	38	83	35,5	45	1,0	81,5
1	48	20-75	40-150	130-200	140	280	25	48	95	45,5	52	1,0	98,5
2	65	25-140	50-280	250-400	380	760	35	65	132	64,0	57	1,0	122

1) Finish bores exceeding 19 mm, feather keyway acc. to DIN 6885 sheet 3
2) With clamping setting nut, to use only for designs with limited dimensions
3) See selection of BoWex® coupling on page 10 et seqq.

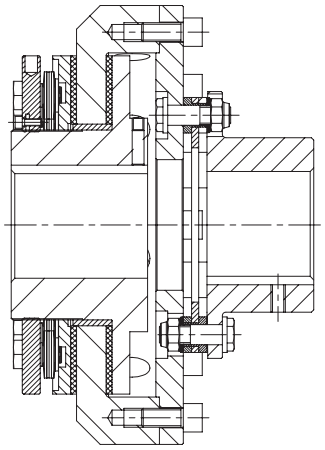

Special type:

- RUFLEX® with torsionally rigid, backlash-free RADEX®-N steel lamina coupling
- For high operating temperatures (up to 280 °C)
- With variable spacers adapted to the different shaft distance dimensions

Ordering example:

RUFLEX® 1	1TF	d Ø20	BoWex® 48	d_1 Ø25	50 Nm
Type / size	Disk spring layer	RUFLEX® bore	Type / size	BoWex® bore	Torque set

Structure and operation

- Overload protection up to 8200 Nm
- Available as a ratchet, synchronous and fail-safe design with the same dimensions
- Reduction of torque peaks
- High repeating accuracy, even after a long operating period
- Disconnection of the drive with overload by retrieving limit switch
- Automatically operative

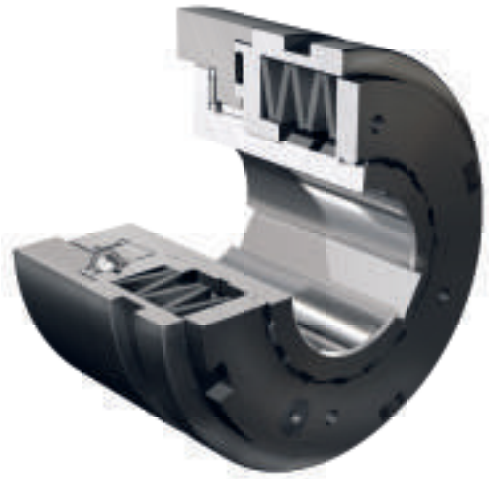

- Different types also suitable for your application
- Easy assembly and torque setting
- Maintenance-free
- Insensitive to oil and grease
- High service life due to high-quality materials

In case of overload the ratchet components (balls or rollers) leave their indentations, and a relative motion between the driving and driven side is generated. Damages caused by overload are reliably prevented in this way. The shift ring (3) makes an axial motion to the shifting way „H “ activating the limit switch or proximity initiator. The signal can be used for controlling or disconnecting the drive. For restarting we would recommend to bypass the limit switch or proximity switch electrically for a short time.

Component	Description
1	Hub
2	Flange ring
3	Shift ring
4	Setting nut
5	Disk spring
6	Ball retainer
7	Slide bush
8	Axial disk
9	Axial needle bearing
10	Setscrew
11	Locking washer

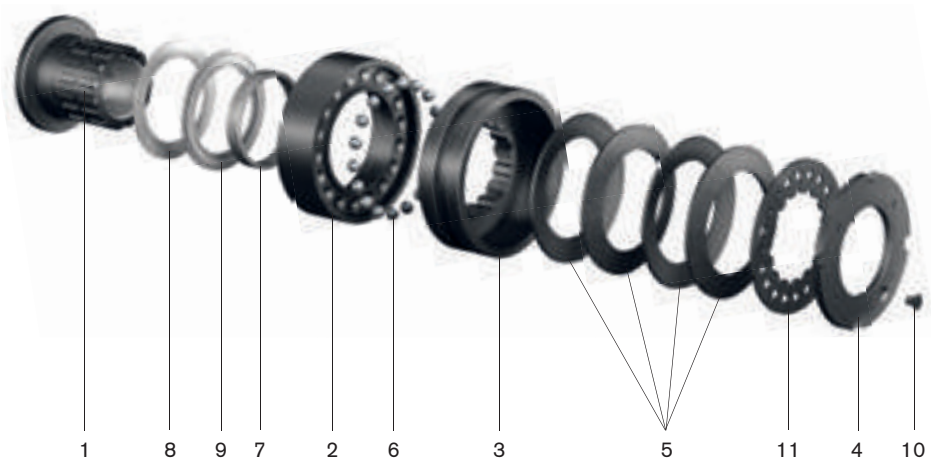

No signal with normal operation

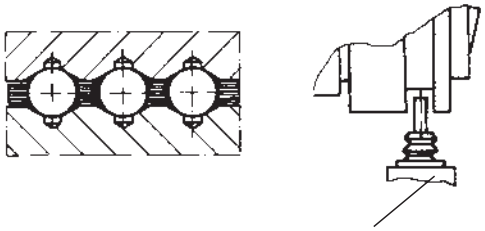

Engaged

Limit switch

Signal with overload

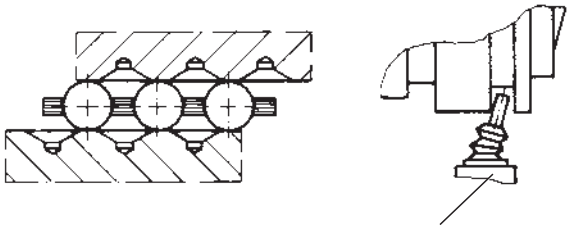

Disengaged

Limit switch

KTR-SI FRE
Idle rotating overload system

Structure and operation

- Idle rotating overload system (load separating)
- High repeating accuracy
- Flange type to connect toothed belt pulleys or sprockets



- Combination with ROTEX®, GEARex® or RADEX®-N as a shaft-to-shaft connection
- The intelligent further development of shear pin couplings and hydraulic clamping sets
- Setting range up to 60,000 Nm (higher torques possible on request)

The core of the overload system is formed by the idle rotation elements. In case of overload they uncouple the driving and driven side while protecting the drive train from damages. After eliminating the overload, the rotation segments are manually re-engaged so that the drive is released again. In order to set the coupling to the requested release torque, a defined prestress is generated on the disk springs in each idle rotation element via the setting nut. The number of elements varies depending on the release torque demanded. If requested, the coupling can be preset by the manufacturer. It is also possible to adapt the coupling while in place.

Component	Description
1	Hub
2	Bearing flange
3	Cylinder screw
4	Angular ball bearing
5	O-ring
6	KTR-SI FRE connection flange
7	Groove ball bearing
8	NILOS ring
9	Supporting washer
10	Locking plate
11	Groove nut
12	Adjusting washer
13	Idle rotation element
14	Setscrew

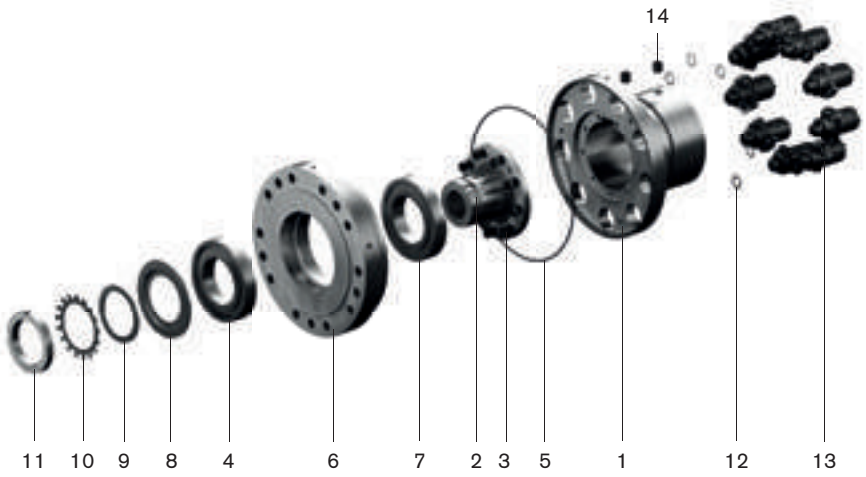

Operating principles

1. Idle rotation type FR/ FRE

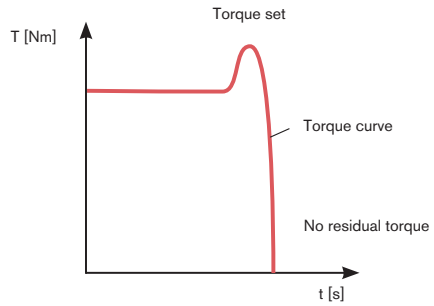

Operating principle of KTR-SI idle-rotation couplings:
When achieving the torque set, the coupling rotates. Subject to the idle rotation mechanism driving and driven side remain separated. The resulting flywheel mass may run out in idle state. After eliminating the overload, the coupling can be re-engaged. The re-engagement is effected manually or via a device.

Re-engagement of FR

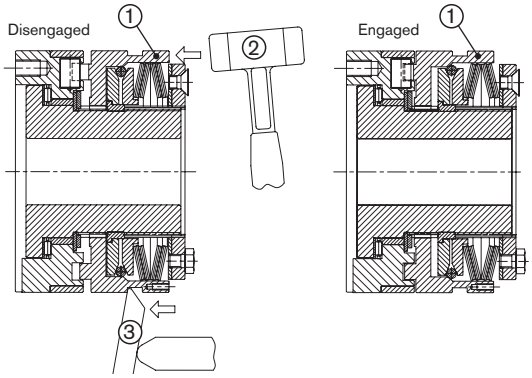

Re-engagement of the idle rotation coupling:
Re-engagement is effected via axial pressure on the shift ring (1). Dependent on the existing resources, accessability etc., the re-engagement can be effected in different ways: By several blows of a plastic hammer (2) axially on the shift ring (see above), by assembly levers (3) or by a pneumatic or hydraulic engagement device (automated process of engagement).

Re-engagement of FRE

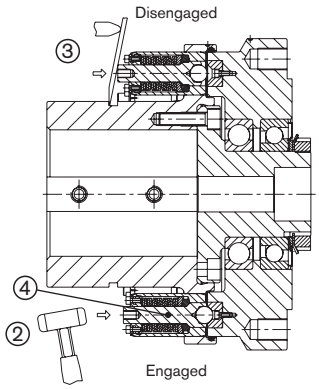

Re-engagement of idle rotation elements
After eliminating the overload, driving and driven side are aligned to each other. By means of a plastic hammer (2) or a tyre lever (3) the idle rotation elements (4) are manually re-engaged. Re-engagement can be heard loudly. The overload coupling is ready for use again.

2. Ratchet design DK

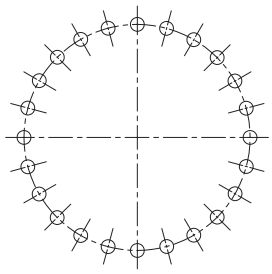

Any engagement after an overload. After eliminating the overload, the balls engage automatically with the next following ball indentation.

3. Synchronous design SR

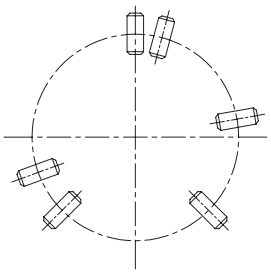

Synchronous engagement after an overload. After eliminating the overload, the balls re-engage automatically with the disk springs after a rotation of 360°. Driving and driven side are always placed in the same position to each other. Other degrees of re-engagement, for example 180°, are also possible.

4. Fail-safe design SGR

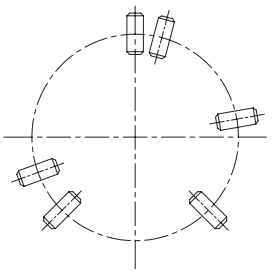

The fail-safe design is a pure torque measurement without any ratchet operation. In case of overload a signal is generated by the limit switch, producing a mechanical separation of driving and driven side = ratching is not possible.

Flange type

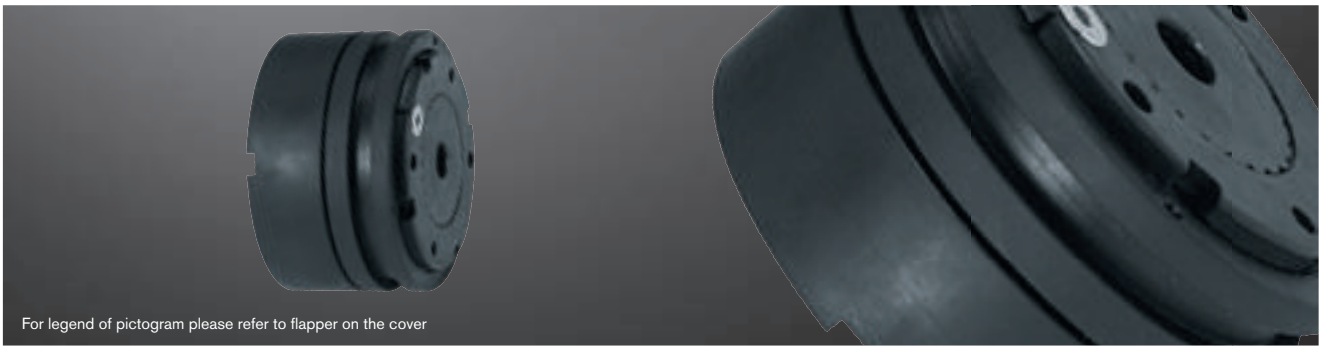



Type FT

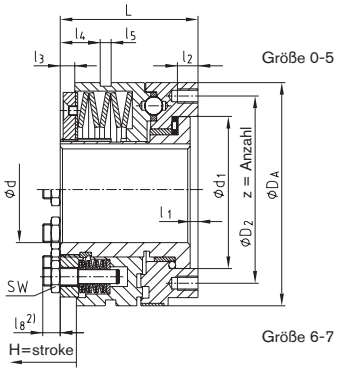

Type KT

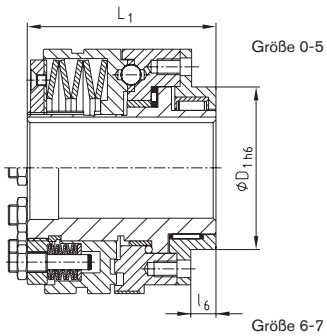

Type LT

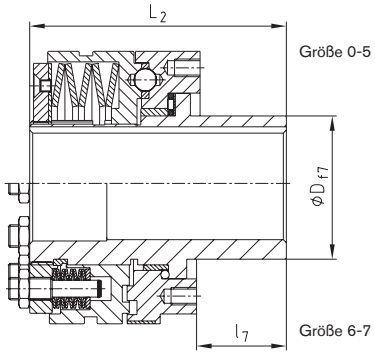

Technical data

Size	Torques [Nm]												Weight with max. bore [kg]
	Type DK				Type SR and SGR				Type FR				
	T1	T2	T3	T4	T1	T2	T3	T4	T1	T2	T3	$n_{max.}$ [rpm][3]	
0	2,5-5	5-20	–	20-40	5-10	10-40	–	–	5-10	10-20	20-40	6000	0,41
1	6-12	12-25	25-55	55-100	12-25	25-50	50-100	–	12-25	25-50	50-100	5000	1,30
2	12-25	25-50	50-120	120-200	25-50	50-100	100-200	–	25-50	50-100	100-200	4000	2,27
3	25-50	50-100	100-250	200-450	50-100	100-200	200-450	–	50-100	100-200	200-450	3500	3,88
4	50-100	100-200	200-500	500-1000	100-200	200-400	400-800	800-2000	100-200	200-400	400-800	3000	8,34
5	85-250	230-600	300-1000	600-2000	170-450	350-900	600-1800	1200-3400	170-450	350-900	600-1800	2300	13,51
6	180-480	360-960	720-1950	1600-3300	300-750	600-1500	1200-3000	2900-5800	–	–	–	–	21
7	250-520	500-1050	1000-2100	2000-3600	550-1100	1100-2200	2200-4400	3000-8200	–	–	–	–	37

Dimensions [mm]

Size	Bore d		d_1	D	D_1	D_2	D_A	l_1	l_2	l_3	l_4	l_5	l_6	l_7	L	L_1	L_2	z	H=stroke			
	pilot b.	max.																	DK	SR	SGR	FR
0	7	20	41,0	28	38	48	55	4,0	6,5	3,0	7,5	9	8	27,5	38,5	51,0	66,0	6xM5	1,4	1,2	0,6	1,6
1	10	25	60,0	38	50	70	82	4,0	8,0	6,0	11,5	9	10	33,0	52,0	70,0	85,0	6xM5	2,3	1,8	0,8	2,3
2	14	35	78,0	52	60	89	100	5,0	10,0	5,0	12,0	9	12	39,0	61,0	78,0	100,0	6xM6	2,4	2,0	1,1	3,0
3	18	45	90,5	65	80	105	120	5,0	12,0	8,5	21,0	10	12	47,0	78,0	96,0	125,0	6xM8	2,7	2,2	1,2	3,5
4	24	55	105,0	78	100	125	146	6,5	15,0	11,0	27,0	9	16	52,5	100,0	124,5	152,5	6xM10[1]	3,7	2,5	1,2	3,8
5	30	65	120,5	90	120	155	176	6,5	17,0	12,0	33,0	9	18	57,5	113,5	140,0	171,0	6xM12[1]	4,6	3,0	1,6	4,5
6 [2]	40	80	136,0	108	130	160	200	7,0	20,0	14,0	39,0	9	20	64,0	119,0	150,0	183,0	6xM12[1]	5,0	3,5	2,5	–
7 [2]	50	100	168,0	135	160	200	240	8,0	25,0	15,0	46,0	9	25	72,0	141,0	175,0	213,0	6xM16[1]	5,5	4,0	2,7	–

[1] Type T4 SR and SRG: tightening torques according to 12.9
[2] Size 6: dimension l_8 = 15 mm, size 7: dimension l_8 = 21 mm
[3] See comments on page 230

Ordering example:

KTR-SI 2	FR	FT	T2	d Ø20	40 Nm
Type / size	Type [DK/SR/SGR]	Type	Disk spring layer	Bore	Torque set

With torsionally flexible ROTEX®





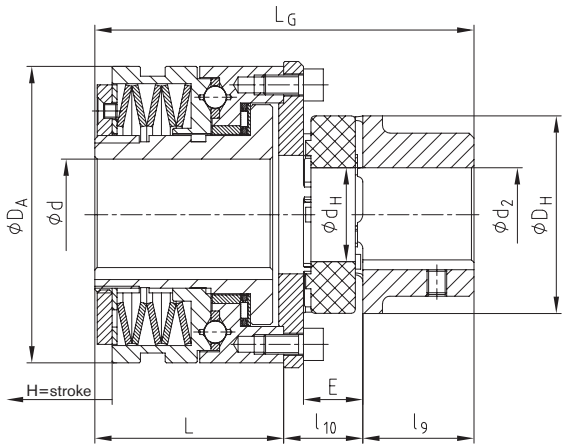

Technical data

KTR-SI size	Torque [Nm] of type DK				Torque [Nm] of type SR and SGR				Torque [Nm] of type FR		
	T1	T2	T3	T4	T1	T2	T3	T4	T1	T2	T3
0	2,5-5	5-20	–	20-40	5-10	10-40	–	–	5-10	10-20	20-40
1	6-12	12-25	25-55	55-100	12-25	25-50	50-100	–	12-25	25-50	50-100
2	12-25	25-50	50-120	120-200	25-50	50-100	100-200	–	25-50	50-100	100-200
3	25-50	50-100	100-250	200-450	50-100	100-200	200-450	–	50-100	100-200	200-450
4	50-100	100-200	200-500	500-1000	100-200	200-400	400-800	800-2000	100-200	200-400	400-800
5	85-250	230-600	300-1000	600-2000	170-450	350-900	600-1800	1200-3400	170-450	350-900	600-1800
6	180-480	360-960	720-1950	1600-3300	300-750	600-1500	1200-3000	2900-5800	–	–	–
7	250-520	500-1050	1000-2100	2000-3600	550-1100	1100-2200	2200-4400	3000-8200	–	–	–

Technical data – Dimensions

KTR-SI size	ROTEX® size	Torque of ROTEX [Nm] 1) 98 Sh-A		Max. bore [mm]		Dimensions [mm]								H=stroke [mm] Type		
		T_{KN}	T_{Kmax}	d	d2	dH	DH	DA	l9	l10	E	L	L_G	DK	SR	FR
0	19	17	34	20	25	18	40	55	25	22	16	38,5	85,5	1,4	1,2	1,6
	28	160	320		40	30	65		35	28,5	20		102			
1	24	60	120	25	35	27	55	82	30	24	18	52	106	2,3	1,8	2,3
	38	325	650		48	38	80		45	32,5	24		129,5			
2	28	160	320	35	40	30	65	100	35	28	20	61	124	2,4	2,0	3,0
	48	525	1050		62	51	105		56	38	28		155			
3	38	325	650	45	48	38	80	120	45	32	24	78	155	2,7	2,2	3,5
	55	685	1370		74	60	120		65	43	30		186			
4	48	525	1050	55	62	51	105	146	56	38	28	100	194	3,7	2,5	3,8
	75	1920	3840		95	80	160		85	56,5	40		241,5			
5	55	685	1370	65	70	60	120	176	65	44	30	113,5	222,5	4,6	3,0	4,5
	90	3600	7200		110	100	200		100	62	45		275,5			
6	100	4950	9900	80	115	113	225	200	110	72	50	119	301	5,0	3,5	–
7	110	7200	14400	100	125	127	255	240	120	78	55	141	339	5,5	4,0	–

1) See selection of ROTEX® couplings on page 10 et seqq.

Ordering example:

KTR-SI 2	DK	T2	d Ø20	ROTEX® 28	98 Sh-A	d_2 Ø25	40 Nm
Type / size	Type	Disk spring layer	KTR-SI bore	Type / size	Spider	ROTEX® bore	Torque set

KTR-SI FRE
Idle rotating overload system

Flange type

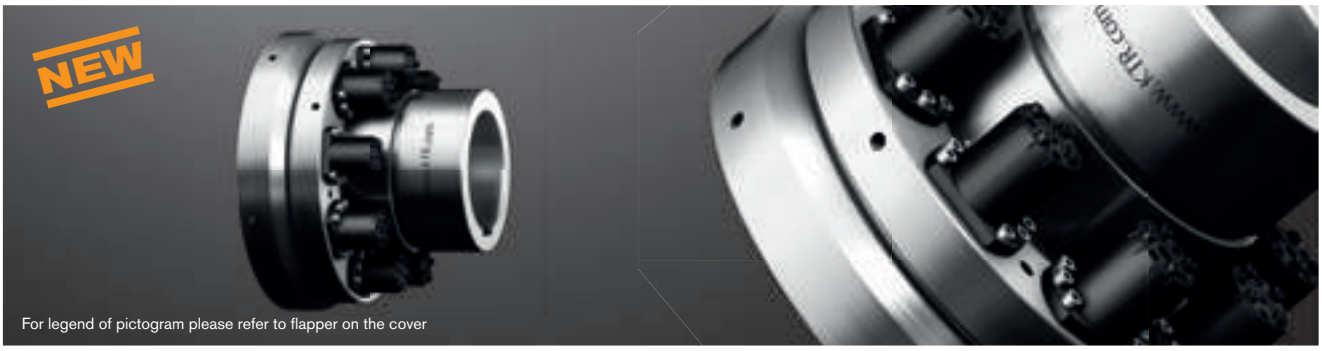



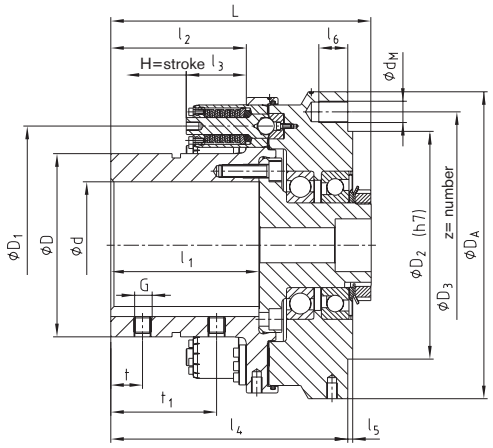

Torques [Nm]							
Size	Type of element	3 idle rotation elements		6 idle rotation elements		9 idle rotation elements	
		min.	max.	min.	max.	min.	max.
9	1T2	1000	4000	2000	8000	–	–
	1T3	2400	5500	4800	11000		
12	1T2	1300	5000	2600	10000	3900	15000
	1T3	2900	6700	5800	13400	8700	20100
15	1T2	1700	6000	3400	12000	5100	18000
	1T3	3500	8200	7000	16400	10500	24600
20	2T2	5000	15000	10000	30000	15000	45000
	2T3	13100	20000	26300	40000	39400	60000

Technical data – Dimensions																							
Size[1]	Bore max.	Dimensions [mm]																		Perm. maximum forces on flange connection [kN][2]		Speed[3] [RPM]	Weight with max. bore [kg]
	d	D	D_1	D_2	D_3	D_A	l_1	l_2	l_3	l_4	l_5	l_6	G	t	t_1	L	d_M	z	Pitch	H=stroke	Radial force	Axial force		
9	90	135	185	200	225	260	120	110	56,7	197	2,5	17,5	M12	25	75	213,5	12	12	12x30°	5,2	18	13	3300	38
12	120	173	225	215	252	290	140	128	56,7	224	4,5	27,5	M16	30	100	246	20	15	20x18°	5,2	26	18	2300	57
15	150	215	270	245	282	324	170	160	56,7	258	4,5	27,5	M20	40	120	281	20	15	20x18°	5,2	30	20	2050	81
20	200	285	370	330	375	460	220	200	88,4	341	5	33,0	M20	50	150	366	24	18	24x15°	8,9	50	40	1550	211

[1] Other sizes available on request
[2] Bigger forces available on request
[3] Higher speeds available on request, see comments on page 230

Ordering example:

KTR-SI FRE 12	1T3	9	d Ø85	12000 Nm
Type / size	Type of element	Number of idle rotation elements	KTR-SI FRE bore	Torque set

KTR-SI FRE
Idle rotating overload system

With torsionally flexible ROTEX®



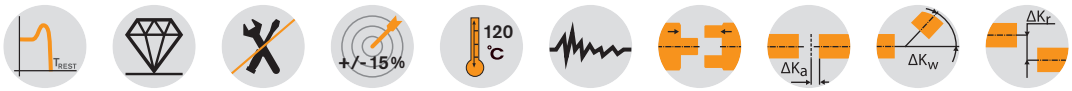

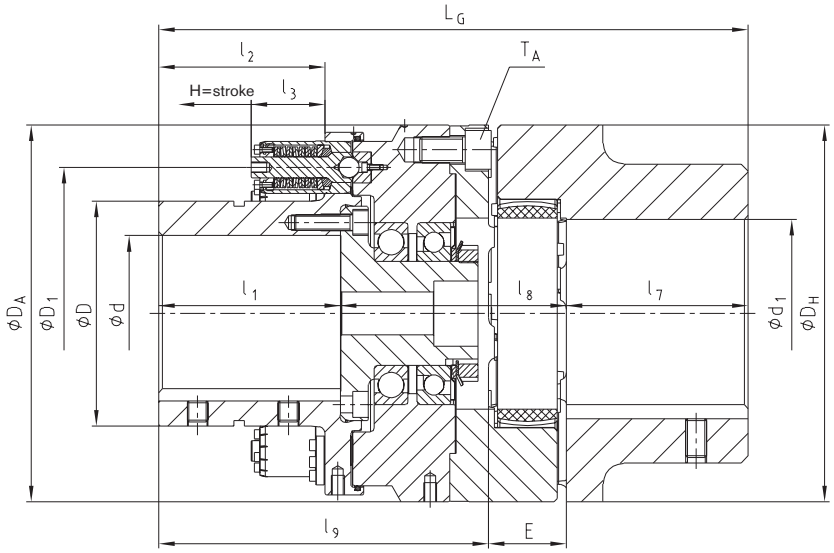

Torques [Nm]							
Size	Type of element	3 idle rotation elements		6 idle rotation elements		9 idle rotation elements	
		min.	max.	min.	max.	min.	max.
9	1T2	1000	4000	2000	8000	–	–
	1T3	2400	5500	4800	11000		
12	1T2	1300	5000	2600	10000	3900	15000
	1T3	2900	6700	5800	13400	8700	20100
15	1T2	1700	6000	3400	12000	5100	18000
	1T3	3500	8200	7000	16400	10500	24600
20	2T2	5000	15000	10000	30000	15000	45000
	2T3	13100	20000	26300	40000	39400	60000

Technical data – Dimensions																					
Size[1]	ROTEX®			Max. bore		Dimensions [mm]													T_A [Nm]	Speed[2] [RPM]	Weight with max. bore [kg]
	Size	Torque [Nm] 64 Sh-D [3]		d	d_1	D	D_1	D_H	D_A	l_1	l_2	l_3	l_7	l_8	l_9	E	L_G	H=stroke			
		T_{KN}	T_{Kmax}																		
9	90	4500	9000	90	110	135	185	200	260	120	110	56,7	100	133	217	45	362	5,2	117	3300	59
12	125	12500	25000	120	145	173	225	290	290	146	130	56,7	140	165	254	60	454	5,2	560	2300	106
15	140	16000	32000	150	160	215	270	320	324	170	160	56,7	155	176	292	65	512	5,2	560	2050	147
20	180	35000	70000	200	200	285	370	420	460	220	200	88,4	195	227	381	85	661	8,9	970	1550	349

[1] Other sizes available on request
[2] Higher speeds available on request, see comments on page 230
[3] See selection of ROTEX coupling on page 10 et seqq.

Ordering example:

KTR-SI FRE 12	1T3	9	d Ø85	ROTEX® 125	98 Sh-A	d_1 Ø85	12000 Nm
Type / size	Type of element	No. of idle rotation elements	KTR-SI FRE bore	Typ / Größe	Zahnkranz	ROTEX® bore	Torque set

Special types



KTR-SI FRE with GEARex® and integrated brake disk



KTR-SI FRE with REVOLEX® and limitation of axial backlash



KTR-SI FRE with RADEX®-N and integrated brake disk



KTR-SI FRE with sprocket

SYNTEX®
Backlash-free overload systems

Structure and operation

- Backlash-free, torsionally rigid overload protection, suitable for reversing drives
- Disconnection of the drive in case of overload
- Reduction of torque peaks
- High repeating accuracy, even after a long operating period
- Easy integration of customers' components
- Compact design, low mass moment of inertia
- Variable due to modular system
- Special disk springs available for special applications



- Low-cost protection even for simple applications
- Easy assembly and torque setting
- Maintenance-free
- Insensitive to oil and grease
- Long service life due to small internal loads
- Backlash-free shaft-hub-connections
- Any or synchronous re-engagement
- Automatically operative

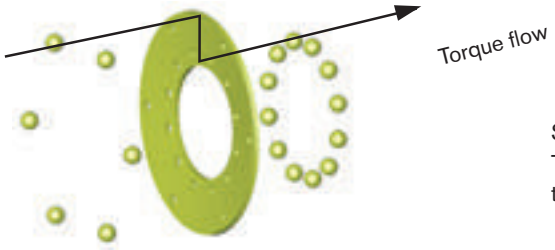

SYNTEX® is an overload system with positive locking operation. The punched disk spring is a component serving for transmitting the torque.

SYNTEX®
Overload system with mounting flange



SYNTEX®
Overload system with sprocket



SYNTEX®
Overload system with ROTEX® GS



Operating principles

Ratchet design DK

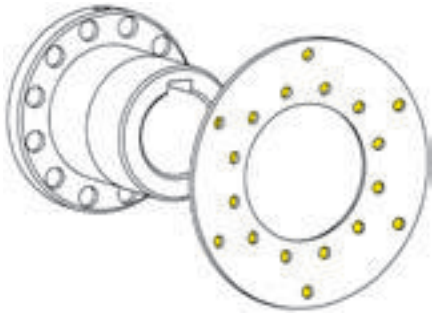

If the torque set is exceeded, a relative movement is generated between the driving and driven side. The transmittable torque is reduced to a minimum.
The balls leave the indentations of the disk springs. After eliminating the overload, the balls engage automatically with the next following ball indentation of the disk springs.

Synchronous design SK

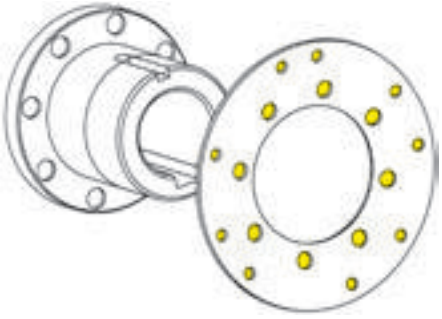

If the torque set is exceeded, a relative movement is generated between the driving and driven side. The transmittable torque is reduced to a minimum.
The balls leave the indentations of the disk springs. After eliminating the overload, the balls re-engage automatically with the disk springs after a rotation of 360° subject to their special pitch. Driving and driven side are always placed in the same position to each other. Other degrees of re-engagement, for example 180°, are also possible.

Signal by limit switch or sensor in case of overload

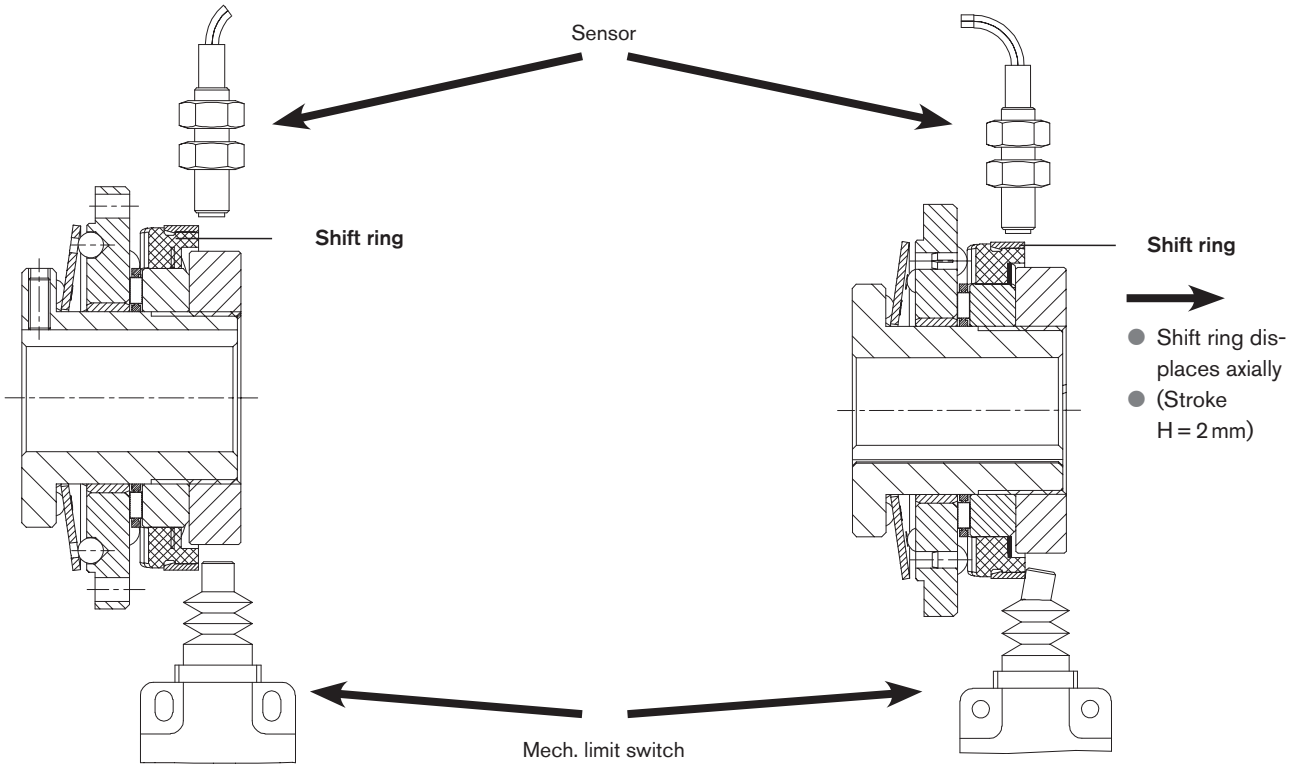

Standard operation:
No signal by sensor or mechanical limit switch

In case of overload:
The axial movement of the shift ring activates the sensor or mechanical limit switch, respectively. Limit switch activated. The resulting signal may be used for control operation (e. g. motor stop).

Flange type





Technical data – Dimensions

Size	Torques [Nm]				Max. speed[1] [rpm]	Dimensions [mm]														
	Ratchet design DK		Synchronous design SK			Max. bore														
	DK_1	DK_2	SK_1	SK_2		d	D	D_1	D_2	D_3	D_4	D_A	l_1	l_2	l_3	l_4	l_5	d_L	L	z	H=stroke
20	6-20	15-30	10-20	20-65	1500	20	48	54	61,5	65	71	80	8	2	16	6	35	4,5	45	8	2
25	20-60	45-90	25-65	40-100	1500	25	60	68	80	81	89	98	8	2	17	8	39	5,5	50	8	2
35	25-80	75-150	30-100	70-180	1000	35	75	78	91	102	110	120	10	2	21	10	42	5,5	60	12	2
50	60-180	175-300	80-280	160-400	1000	50	105	108	121	142	152	162	12	2	25	13	56	6,6	70	12	2

Dimensions of hub type 4.5

Size	Dimensions [mm]							Tightening torque T_A [Nm]
	$d_{1max.}$	l_6	l_7	l_8	L_1	s	Clamping screws	
20	20	9	3,5	23	54	3	4 x M5	8,5
25	25	11	4,0	28	61	4	4 x M6	14
35	35	10	4,0	31	70	4	4 x M6	14
50	50	12	4,0	37	82	6	4 x M6	14

Transmittable friction torques T_R [Nm] (fitting tolerance H7/h6) of hub type 4.5

Size	Ø12	Ø14	Ø15	Ø16	Ø17	Ø18	Ø19	Ø20	Ø22	Ø23	Ø24	Ø25	Ø28	Ø30	Ø32	Ø35	Ø38	Ø40	Ø42	Ø45	Ø48	Ø50
20	45	62	71	81	92	103	115	127														
25		72	83	95	107	120	133	148	179	196	213	231										
35									127	139	152	165	207	237	270	323						
50																238	281	311	343	394	448	486

[1] See comments on page 231

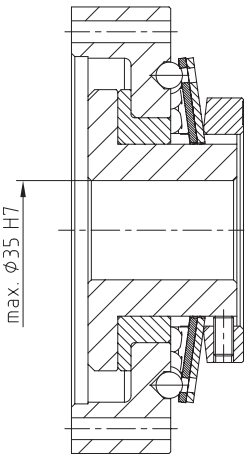

Special type

- SYNTEX® 35 spec. with integrated flange
- Performance range up to 360 Nm
- Adjustment of the flange to ambient components possible

Ordering example:	SYNTEX® 25	d Ø20	DK1	1.0	45 Nm
	Type / size	Bore	Type [DK/SK]	Hub type	Torque set

Hub type 1.0

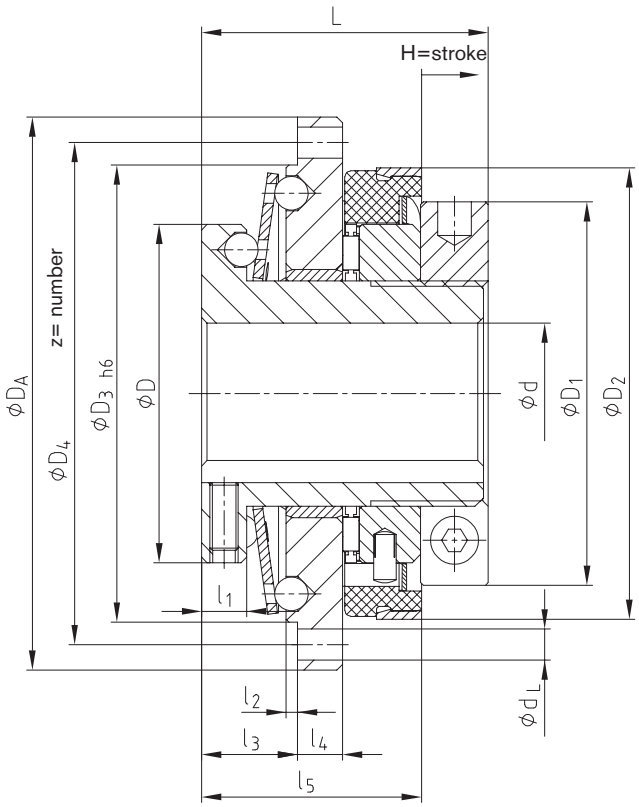

Hub type 4.5

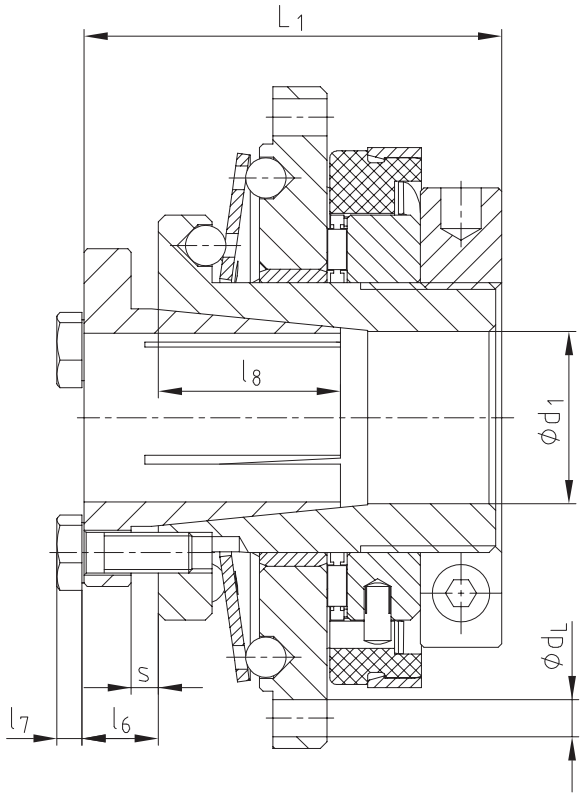

With sprocket





Technical data – Dimensions

Size	Torque [Nm]				Max. speed [rpm][2]	Dimensions [mm]								
	Ratchet design DK		Synchronous design SK			Max. bore								
	DK1	DK2	SK1	SK2		d	Standard sprocket[1]	D	D_1	D_2	l_1	l_3	l_5	L	H=stroke
20	6-20	15-30	10-20	20-65	1500	20	06B-1 ($^3/_8$ x $^7/_{32}$) z = 25	48	54	61,5	8	14	33	45	2
25	20-60	45-90	25-65	40-100	1500	25	08B-1 ($^1/_2$ x $^5/_{16}$) z = 24	60	68	80	8	15	37	50	2
35	25-80	75-150	30-100	70-180	1000	35	08B-1 ($^1/_2$ x $^5/_{16}$) z = 29	75	78	91	10	19	41	60	2
50	60-180	175-300	80-280	160-400	1000	50	12B-1 ($^3/_4$ x $^7/_{16}$) z = 27	105	108	121	12	23	52	70	2

Dimensions of hub type 4.5

Size	Dimensions [mm]							Tightening torque T_A[Nm]
	$d_{1max.}$	l_6	l_7	l_8	L_1	s	Clamping screws	
20	20	9	3,5	23	54	3	4 x M5	8,5
25	25	11	4,0	28	61	4	4 x M6	14
35	35	10	4,0	31	70	4	4 x M6	14
50	50	12	4,0	37	82	6	4 x M6	14

Transmittable friction torques T_R [Nm] (fitting tolerance H7/h6) of hub type 4.5

Size	Ø12	Ø14	Ø15	Ø16	Ø17	Ø18	Ø19	Ø20	Ø22	Ø23	Ø24	Ø25	Ø28	Ø30	Ø32	Ø35	Ø38	Ø40	Ø42	Ø45	Ø48	Ø50
20	45	62	71	81	92	103	115	127														
25		72	83	95	107	120	133	148	179	196	213	231										
35									127	139	152	165	207	237	270	323						
50																238	281	311	343	394	448	486

[1] z= minimum number of teeth required / other sprockets available on request
[2] See comments on page 230

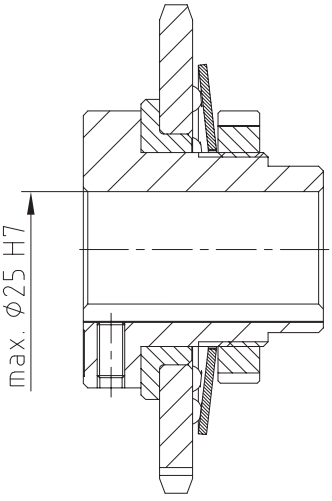

Special type

- Standard SYNTEX® with integrated belt drive
- Available ready for assembly with the torque set
- Reduction of number of components by integration of components
- Available both as a ratchet and synchronous design
- Torque setting possible while in place
- Finish bore according to ISO fit H7, feather keyway according to DIN 6885 sheet 1 - JS9
- Also available with a frictionally engaged shaft-hub-connection (hub design 4.5)

Ordering example:

SYNTEX® 25	DK1	1.0	d Ø20	08B-1 ($^1/_2$ x $^5/_{16}$), z=29	45 Nm
Type / size	Type [DK/SK]	Hub type	Bore	Sprocket	Torque set

Hub type 1.0

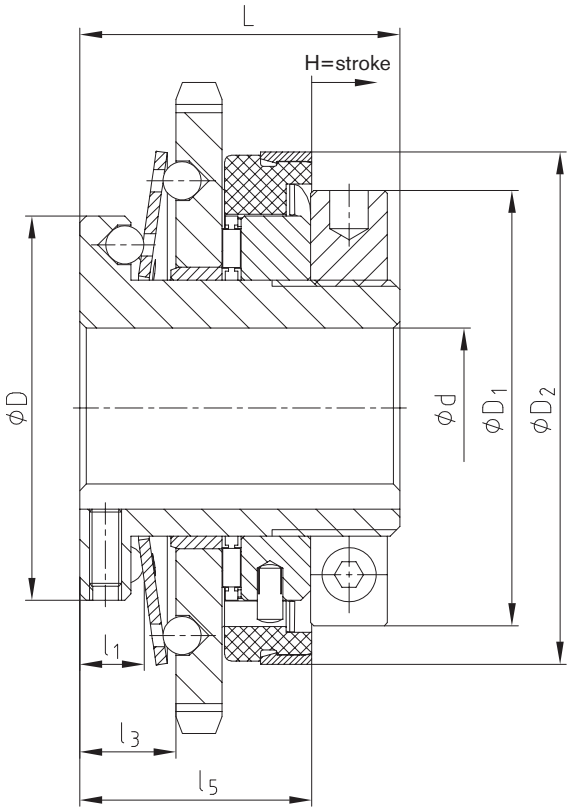

Hub type 4.5

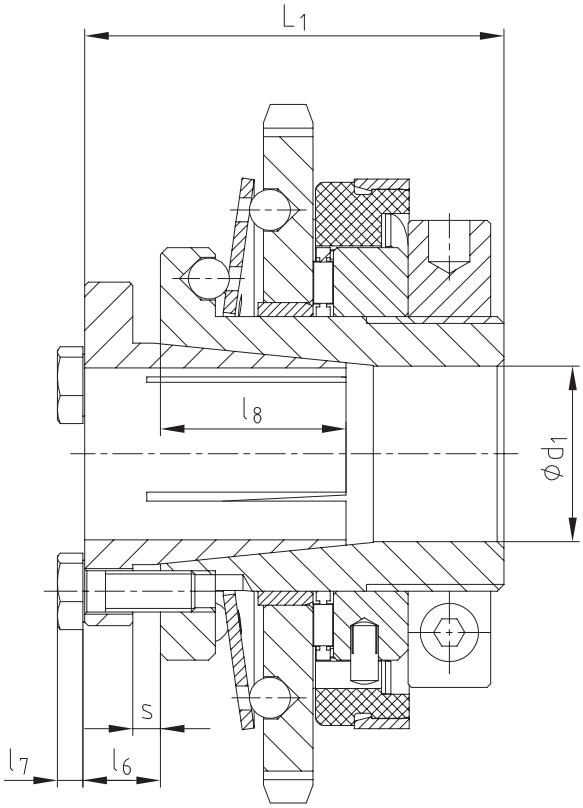

With toothed belt pulley





Hub type 1.0

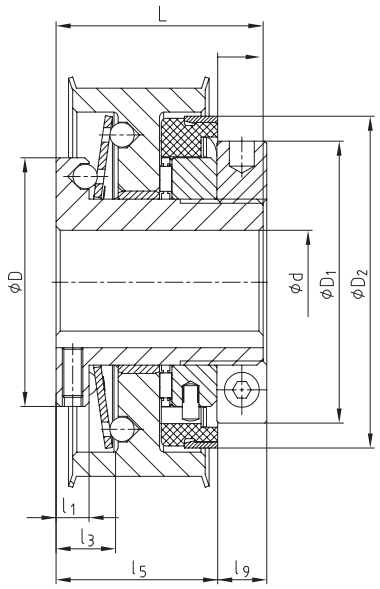

Hub type 4.5

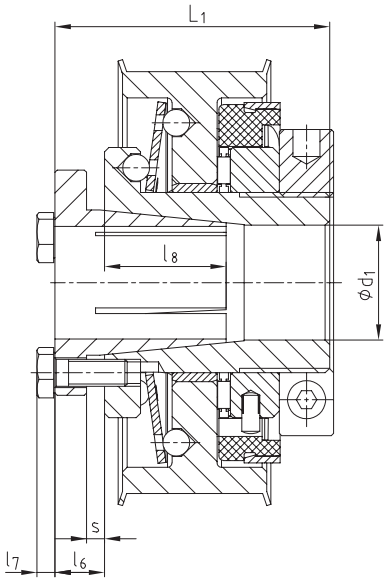

Technical data – Dimensions

Size	Torques [Nm]				Max. speed [rpm][2]	Dimensions [mm]									
	Ratchet design DK		Synchronous design SK			Max. bore	Toothed belt pulley								
	DK1	DK2	SK1	SK2		d	T10 [1]	AT10 [1]	D	D_1	D_2	l_1	l_3	l_5	L	H=stroke
20	6-20	15-30	10-20	20-65	1500	20	T10, z=24	AT10, z=24	48	54	61,5	8	14	35	45	2
25	20-60	45-90	25-65	40-100	1500	25	T10, z=30	AT10, z=30	60	68	80	8	15	39	50	2
35	25-80	75-150	30-100	70-180	1000	35	T10, z=36	AT10, z=36	75	78	91	10	19	42	60	2
50	60-180	175-300	80-280	160-400	1000	50	T10, z=48	AT10, z=48	105	108	121	12	23	56	70	2

Dimensions of hub type 4.5

Size	Max. bore	Dimensions [mm]							Tightening torque T_A [Nm]
	d_1	l_6	l_7	l_8	l_9	L_1	s	Clamping screws	
20	20	9	3.5	23	10	54	3	4 x M5	8.5
25	25	11	4.0	28	11	61	4	4 x M6	14
35	35	10	4.0	31	13	70	4	4 x M6	14
50	50	12	4.0	37	14	82	6	4 x M6	14

Transmittable friction torques T_R [Nm] (fitting tolerance H7/h6) of hub type 4.5

Size	Ø12	Ø14	Ø15	Ø16	Ø17	Ø18	Ø19	Ø20	Ø22	Ø23	Ø24	Ø25	Ø28	Ø30	Ø32	Ø35	Ø38	Ø40	Ø42	Ø45	Ø48	Ø50
20	45	62	71	81	92	103	115	127														
25		72	83	95	107	120	133	148	179	196	213	231										
35									127	139	152	165	207	237	270	323						
50																238	281	311	343	394	448	486

[1] z= minimum number of teeth required / other sizes available on request
[2] See comments on page 230

Ordering example:

SYNTEX® 25	DK1	1.0	d Ø20	AT10, z=24	30	45 Nm
Type / size	Type [DK/SK]	Hub type	Bore	Toothed belt pulley	Width of tooth. belt pul.	Torque set

With backlash-free ROTEX® GS



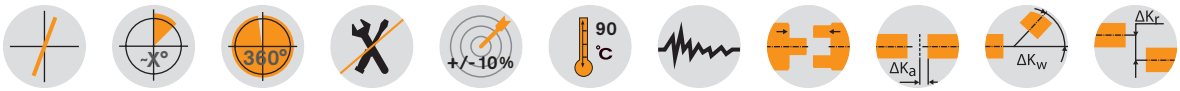

Hub type 1.0

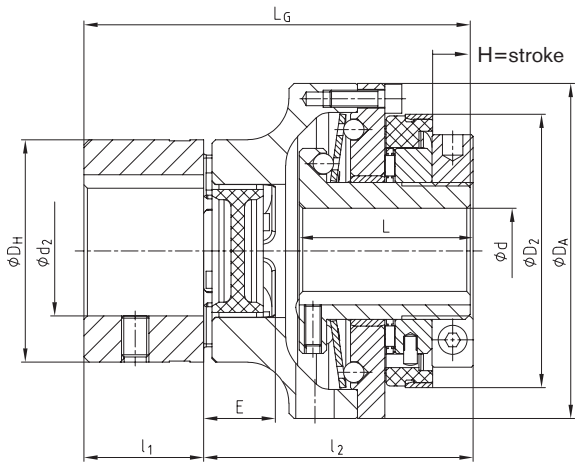

Hub type 1.0

Hub type 6.0

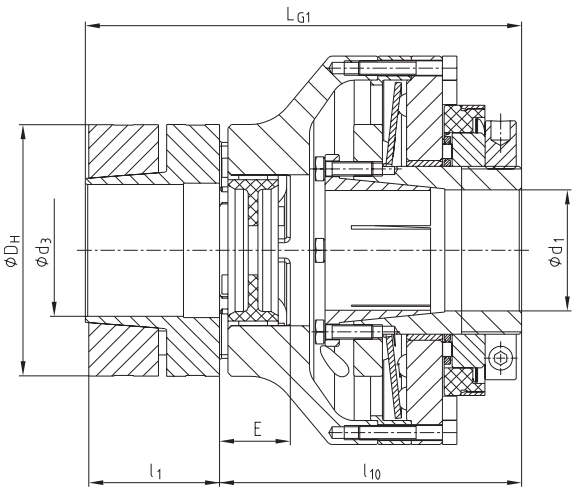

Hub type 4.5

Technical data – Dimensions

SYNTEX® size	ROTEX® GS size	Torques [Nm]						Max. speed [rpm][2]	Dimensions [mm]															
		Ratchet design DK		Synchronous design SK		ROTEX® GS 98 Sh A-GS[1]			Max. bore															
		DK1	DK2	SK1	SK2	T_{KN}	$T_{Kmax.}$		d	d_1	d_2	d_3	D_2	D_H	D_A	l_1	l_2	l_{10}	E	L	L_G	L_{G1}	H= stroke
20	24	6-20	15-30	10-20	20-65	60	120	1500	20	20	28	28[3]	61,5	55	80	30	70	83	18	45	100	113	2
25	28	20-60	45-90	25-65	40-100	160	320	1500	25	25	38	38[3]	80	65	98	35	78	91	20	50	113	126	2
35	38	25-80	75-150	30-100	70-180	325	650	1000	35	35	45	48[3]	91	80	120	45	91	105,5	24	60	136	150,5	2
50	48	60-180	175-300	80-280	160-400	525	1050	1000	50	50	62	55[3]	121	105	162	56	111	126	28	70	167	182	2

Transmittable friction torques T_R [Nm] (fitting tolerance H7/h6) of hub type 4.5

Size	Ø12	Ø14	Ø15	Ø16	Ø17	Ø18	Ø19	Ø20	Ø22	Ø23	Ø24	Ø25	Ø28	Ø30	Ø32	Ø35	Ø38	Ø40	Ø42	Ø45	Ø48	Ø50
20	45	62	71	81	92	103	115	127														
25		72	83	95	107	120	133	148	179	196	213	231										
35									127	139	152	165	207	237	270	323						
50																238	281	311	343	394	448	486

[1] See selection of ROTEX® GS coupling on page 18 et seqq.
[2] See comments on page 230
[3] For transmittable friction torques T_R [Nm] of ROTEX® GS hub type 2.8 or 6.0 refer to mounting instructions of ROTEX® GS

Ordering example:

SYNTEX® 25	DK1	1.0	d Ø20	ROTEX® GS 28	98 ShA-GS	1.0	d_2 Ø25	50 Nm
Type / size	Type	Hub type	Bore	Type / size	Spider	Hub type	ROTEX® GS bore	Torque set

SYNTEX®-NC / KTR-SI Compact
Backlash-free overload systems

Structure and operation

The design of the backlash-free overload systems SYNTEX®-NC and KTR-SI Compact is based on a spring-preloaded and positive-locking ball-ratchet-principle allowing for a high repeating accuracy and short reaction times. Moreover, an integrated groove ball bearing provides for the option of direct assembly of toothed belt pulleys, special flanges or other components. Main applications are latest machine tools, control and positioning technology as well as packaging machines and special purpose machinery.
Both systems make use of disk springs with a declining spring characteristic the preset prestress of which drops during the ratching process. As a result driving and driven end are separated reliably from each other within some milliseconds with the wear on the components being reduced to a minimum simultaneously.

Spring characteristic

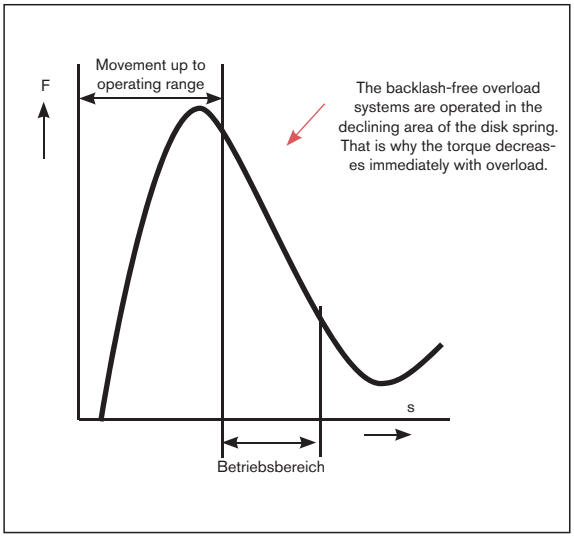

What does backlash-free mean?

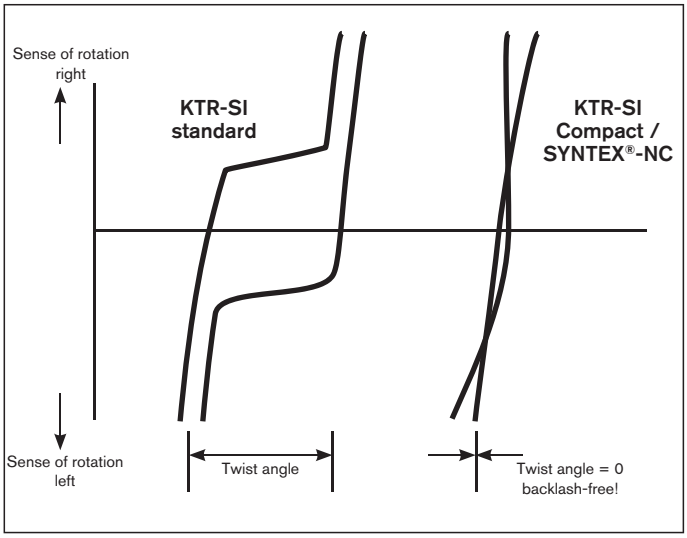

Ratchet design DK

Any engagement after an overload. After eliminating the overload, the balls engage automatically with the next following ball indentation of the disk springs.

Synchronous design SK

Synchronous engagement after an overload. After eliminating the overload, the balls re-engage automatically with the disk springs after a rotation of 360°. Driving and driven side are always placed in the same position to each other. Other degrees of re-engagement, e.g. 180°, are also possible.

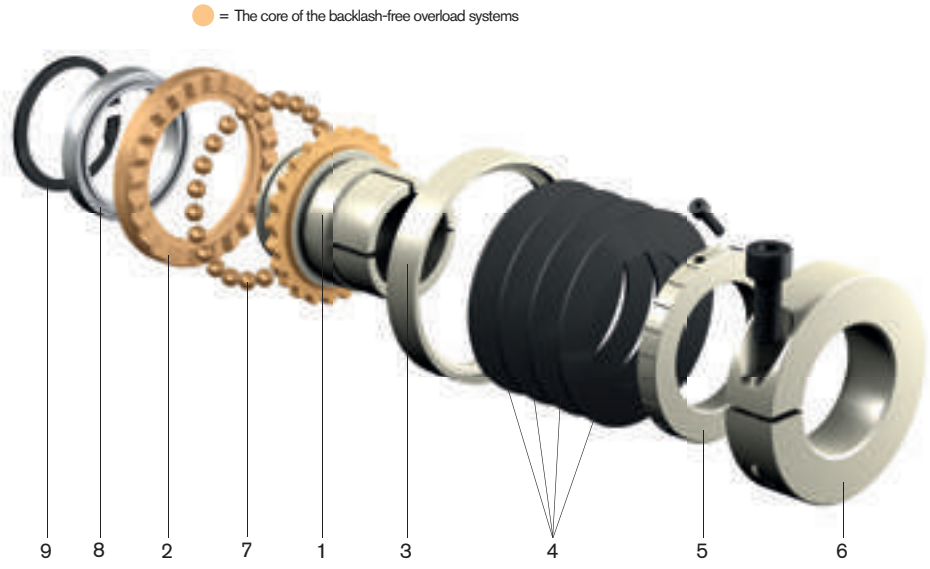

List of components:

1. Hub with keyway to DIN (type 1.0) or with clamping ring (type 6.1)
2. Flange ring
3. Shift ring
4. Disk spring
5. Setting nut
6. Clamping ring
7. Balls
8. Groove ball bearing
9. Snap ring

SYNTEX®-NC / KTR-SI Compact
Backlash-free overload systems

Operating principle

- Backlash-free torque transmission
- Light-weight design
- Declining spring characteristic
- Overload protection up to 550 Nm
- Lower mass moment of inertia
- Large bore diameters
- Short reaction times
- High power density



- Clamping ring design easy to assemble
- Available both as a ratchet (DK) and synchronous design (SK)
- Backlash-free shaft-hub-connection
- In combination with the backlash-free ROTEX®-GS or backlash-free, torsionally rigid TOOLFLEX®
- Direct assembly of toothed belt pulley, as an example, possible (integrated groove ball bearing)

- Backlash-free overload system with a declining spring characteristic
- Solid design
- Accurate disengagement with high repeating accuracy
- Accurate backlash-free torque transmission even in case of wear
- Shift ring with setting scale for accurate torque setting



- Easy torque setting by torque scale on the coupling
- Connection flange with ball bearing
- Hardened ratchet surfaces for a long service life
- Backlash-free shaft-hub-connection via taper bush
- Can be used with the proven ROTEX® GS as a shaft-to-shaft connection

Hub type

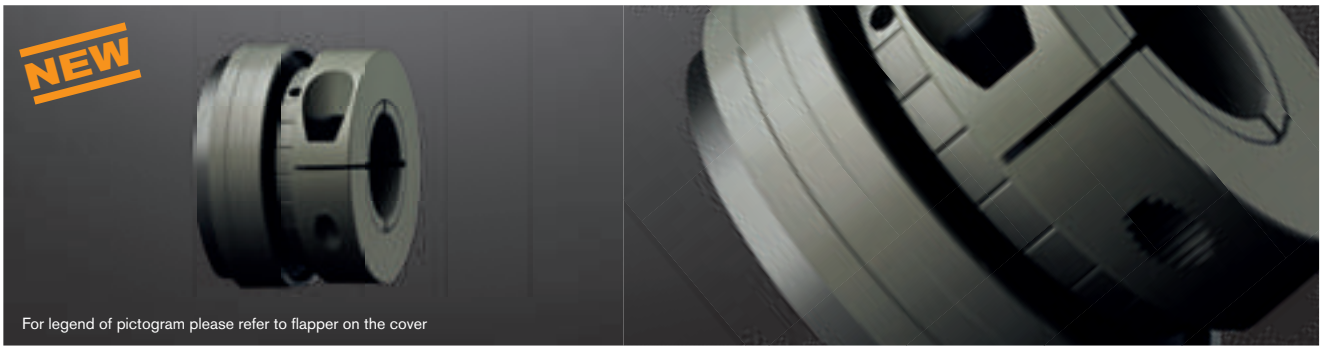



Hub type 1.0 (keyway to DIN 6885)

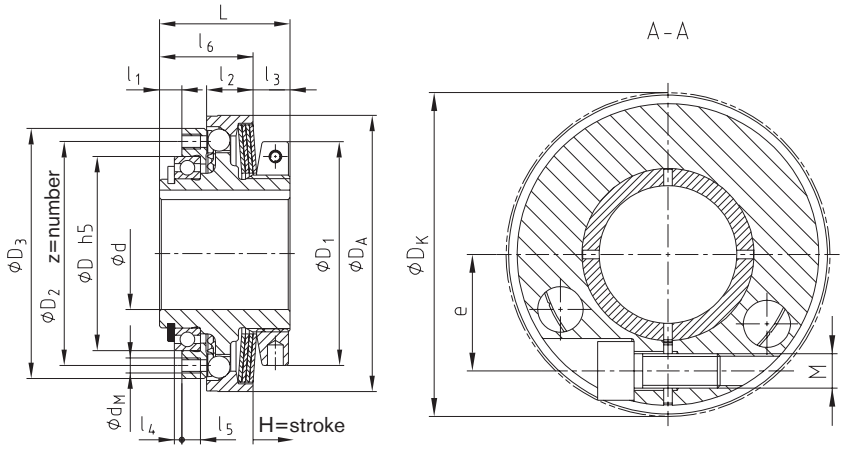

Hub type 6.1 (clamping ring)

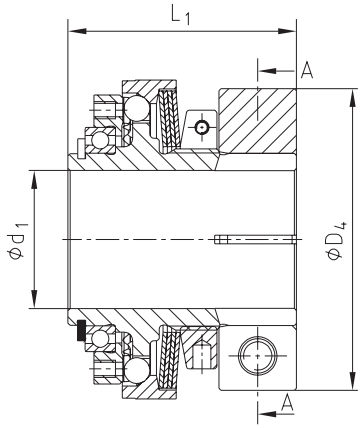

Technical data – Dimensions

	Size	Max. speed [rpm][3]	Torques [Nm]			Max. bore	Dimensions [mm]													
			T_1	T_2	T_3	d	D_{h5}	D_1	D_2	D_3	D_A	l_1	l_2	l_3	l_4	l_5	l_6	L	z x d_M	H-stroke
NEW	15	3500	2 - 3,5	3,5 - 7	7 - 14	12 [1]	32	33	37	42	42	5,0	7,0	9,2	2	4	18,8	28	12xM3	0,8
	25	3000	9 - 15	20 - 35	40 - 65	22[1]	42	50	48	56	61	5,5	11,5	9,1	2	5	23,9	33	8xM4	1,2
	32	3000	25 - 38	50 - 75	100 - 150	30[1]	52	60	60	67	74	6	12,5	9,9	2	5	25,1	35	8xM4	1,5
	42	2500	30 - 65	60 - 135	120 - 265	38[1]	65	72	75	83	90	7	16	11,2	2	6	31,8	43	8xM5	1,5
NEW	60 [4]	2000	70 - 140	120 - 180	220 - 550	50 [1]	90	96	100	113	116	8	21	11,8	2	7	38,2	52	12xM6	1,8

Dimensions of hub type 6.1

	Size	Bore d_1		Dimensions [mm]						Weight with max. bore [kg]	Mass moment of inertia[2] Jtotal [kgm²]
		pilot bored	max.	D_4	D_K	L_1	e	M	T_A [Nm]		
NEW	15	7,5	15	40	43	38	15	M4	1,7	0,124	$0,029 \times 10^{-3}$
	25	9,5	25	55	-	45	21	M6	14	0,282	$0,14 \times 10^{-3}$
	32	13,5	32	70	-	53	27	M8	34	0,471	$0,35 \times 10^{-3}$
	42	18,5	42	86	91,2	63	33	M10	67	0,815	$0,95 \times 10^{-3}$
NEW	60 [4]	24	60	112	119,4	75	45	M12	115	3,04	$5,9 \times 10^{-3}$

Transmittable friction torques T_R [Nm] of hub type 6.1

	Size	Ø8	Ø10	Ø11	Ø12	Ø14	Ø15	Ø16	Ø18	Ø19	Ø20	Ø22	Ø24	Ø25	Ø28	Ø30	Ø32	Ø35	Ø36	Ø38	Ø40	Ø42	Ø45	Ø48	Ø50	Ø55	Ø60
NEW	15	8	12	14	16	22	24	24																			
	25		34	41	48	63	71	79	55	61	67	79	92	98													
	32						87	95	118	130	143	169	132	143	174	197	220										
	42										170	203	238	257	314	354	301	353	371	407	444	482					
NEW	60 [4]													247	310	356	405	485	513	571	633	394	452	514	558	675	803

[1] Max. bore, feather keyway acc. to DIN 6885 sheet 3
[2] With maximum bore
[3] See comments on page 230
[4] Material steel

Ordering example:

SYNTEX®-NC 32	SK	6.1	T3	d_1 Ø25	120
Type / size	Type [DK/SK]	Hub type	Disk springs	Bore	Torque set

With backlash-free ROTEX® GS

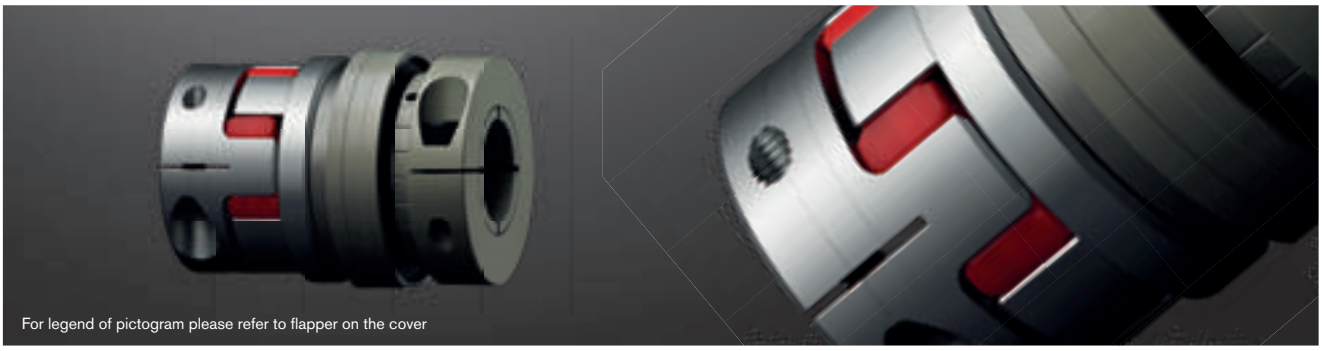

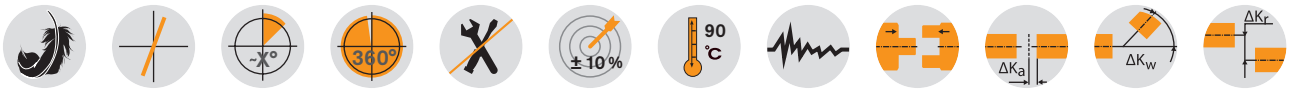

Hub type 2.8

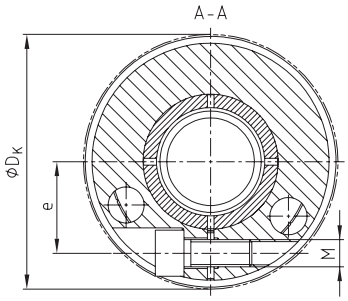

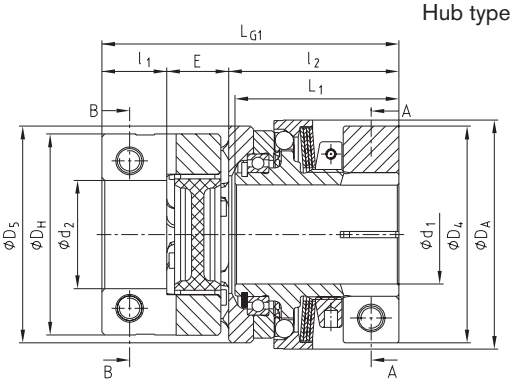

Hub type 6.1

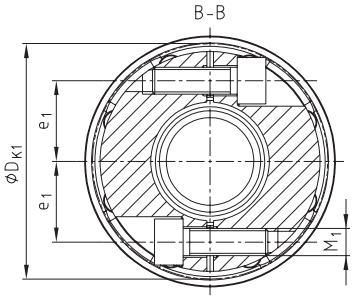

Hub type 2.9
from size 60 1.0

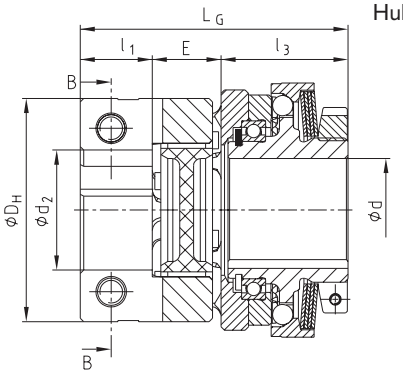

Hub type 1.0

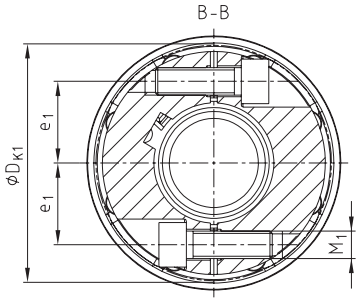

Technical data – Dimensions

	Size	ROTEX® GS size [1]	Torques [Nm] T1	T2	T3	Max. speed [rpm][2]	Max. bore [mm] d	d1	d2	Dimensions [mm] D5	DH	DK	DK1	DA	l1	l2	l3	E	e	e1	LG	L1	LG1	M	TA [Nm]	M1	TA1 [Nm]
NEW	15	19	2 - 3,5	3,5 - 7	7 - 14	3500	12	15	24[3]	45	40	-	46,7	42	17	40	40	16	15	15,5	63	38	73	M4	1,7	M5	6
	25	24	9 - 15	20 - 35	40 - 65	3000	22	25	32[3]	58	55	-	57,5	61	18	47,5	35,5	18	21	20	71,5	45	83,5	M6	14	M6	10
	32	28	25 - 38	50 - 75	100 - 150	3000	30	32	35[3]	70	65	-	69	74	21	55	37	20	27	23,8	78	53	96	M8	34	M8	25
	42	38	30 - 65	60 - 135	120 - 265	2500	38	42	45[3]	88	80	91,2	86	90	26	66	46	24	33	30,5	96	63	116	M10	67	M10	49
NEW	60 [4]	48	70 - 140	120 - 280	220 - 550	2000	50	60	55[3]	113	105	119,4	-	116	56	83	60	28	45	-	144	75	167	M12	115	M10	49

Transmittable friction torques T_R [Nm] of hub type 6.1

	Size		Ø10	Ø11	Ø12	Ø14	Ø15	Ø16	Ø18	Ø19	Ø20	Ø22	Ø24	Ø25	Ø28	Ø30	Ø32	Ø35	Ø36	Ø38	Ø40	Ø42					
NEW	15	8	12	14	16	22	24																				
	25		34	41	48	63	71	79	55	61	67	79	92	98													
	32						87	95	118	130	143	169	132	143	174	197	220										
	42										170	203	238	257	314	354	301	353	371	407	444	482					
NEW	60 [4]													247	310	356	405	485	513	571	633	394	452	514	558	675	803

[1] See selection of ROTEX® GS coupling on page 18 et seqq.
[2] See comments on page 230
[3] For transmittable friction torques T_R [Nm] of ROTEX® GS hub type 2.8 or 6.0 see mounting instructions of ROTEX® GS
[4] Material steel

Ordering example:	SYNTEX®-NC 32	SK	6.1	T3	d1 Ø25	28	2.8	d2 Ø20	120
	Type / size	Type	Hub type	Disk springs	SYNTEX®-NC bore	ROTEX® GS size	Hub type	ROTEX® GS bore	Torque set

SYNTEX®-NC
Backlash-free overload systems

With torsionally rigid TOOLFLEX® S

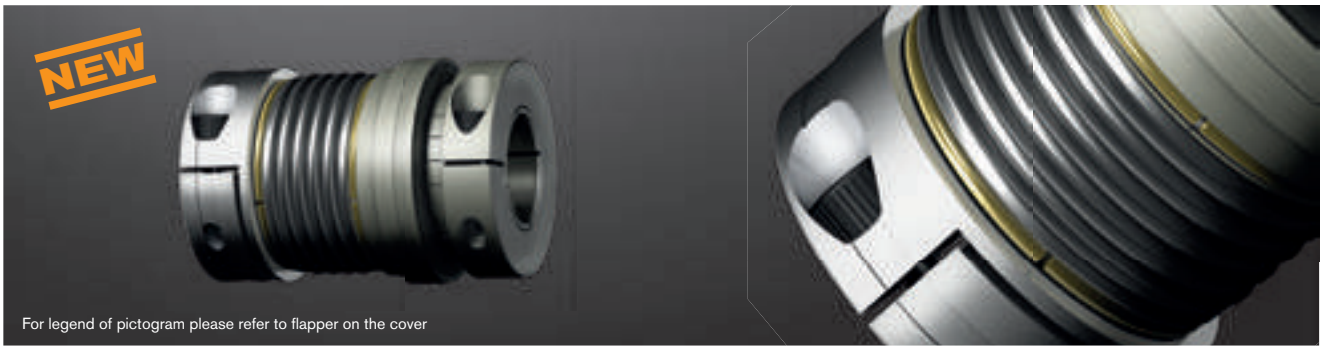



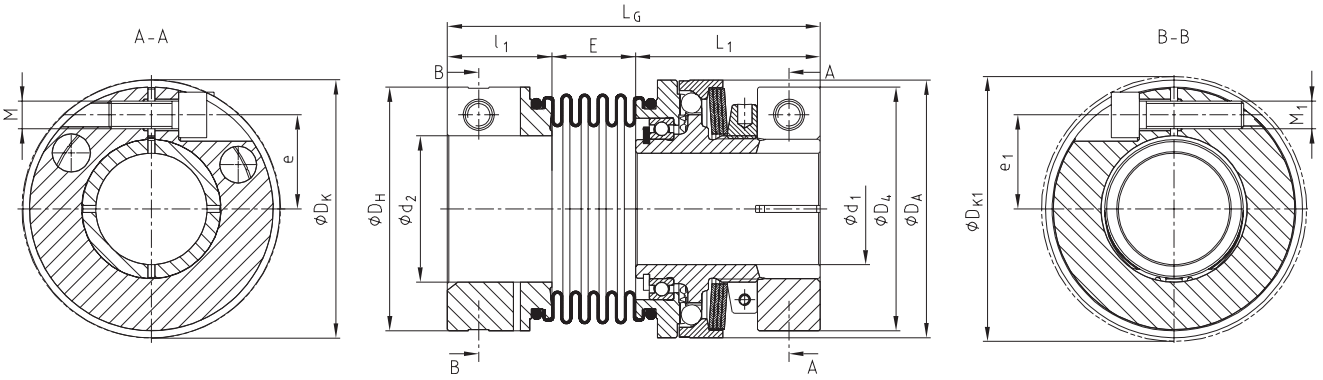

Technical data – Dimensions

	Size	TOOLFLEX® size[1]	Torques [Nm]			Speed [rpm] [2]	Max. bore		Dimensions [mm]															
			T_1	T_2	T_3		d_1	d_2	D_4	D_H	D_A	D_K	D_{K1}	l_1	L_1	E	e	e_1	L_G	M	T_A [Nm]	M_1	T_{A1} [Nm]
NEW	15	20	2 - 3,5	3,5 - 7	7 - 14	3500	15	20[3]	40	40	52	43	43,5	21,5	38	16,5	15	14,5	76	M4	1,7	M5	6
	25	38	9 - 15	20 - 35	40 - 65	3000	25	38[3]	55	65	61	-	72,6	25,5	45	18	21	25	88	M6	14	M8	25
	32	42	25 - 38	50 - 75	100 - 150	3000	32	42[3]	70	70	74	-	76,1	30	53	24	27	27	107	M8	34	M8	25
	42	45	30 - 65	60 - 135	120 - 265	2500	42	45[3]	86	83	90	91,2	89	32	63	22,5	33	30	114	M10	67	M10	49
NEW	60 [4]	65	70 - 140	120 - 280	220 - 550	2000	60	65[3]	112	125	140	119,4	127,1	45	84	36	45	45	165	M12	115	M14	185

Transmittable friction torques T_R [Nm] of hub type 6.1

	Size	Ø8	Ø10	Ø11	Ø12	Ø14	Ø15	Ø16	Ø18	Ø19	Ø20	Ø22	Ø24	Ø25	Ø28	Ø30	Ø32	Ø35	Ø36	Ø38	Ø40	Ø42	Ø45	Ø48	Ø50	Ø55	Ø60
NEW	15	8	12	14	16	22	24																				
	25		30	35	42	55	62	69	48	53	58	69	80	86													
	32						74	83	104	114	125	148	116	125	153	172	192										
	42										149	178	209	225	275	310	264	309	324	356	389	422					
NEW	60 [4]													247	310	356	405	485	513	571	633	394	452	514	558	675	803

[1] See selection of TOOLFLEX® couplings on page 18 et seqq.
[2] See comments on page 230
[3] For transmittable friction torques T_R [Nm] of TOOLFLEX® hub type 2.5 see mounting instructions of TOOLFLEX®
[4] Material steel

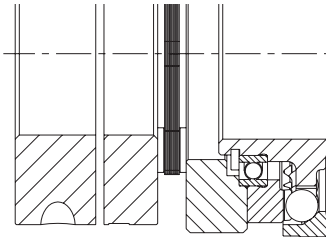

Special type:

- SYNTEX®-NC with RADEX®-NC

Ordering example:

SYNTEX®-NC 32	SK	6.1	T3	d_1 Ø25	42	2.5	d_2 Ø20	120
Type / size	Type	Hub type	Disk springs	SYNTEX-®NC bore	TOOLFLEX® size	Hub type	TOOLFLEX® bore	Torque set

Flange type





Hub type 1.0
Size 01 - 3

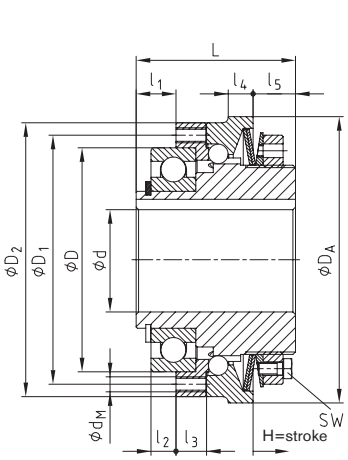

Hub type 4.5 with taper bush
Size 01 - 3

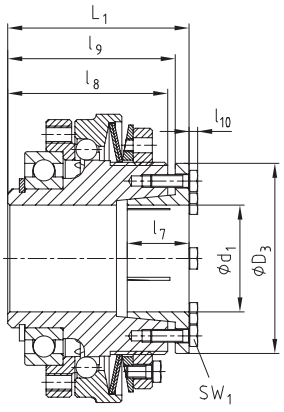

Hub type 1.0
Size 4

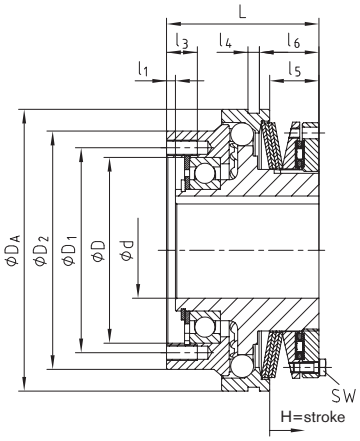

Hub type 4.5 with taper bush
Size 4

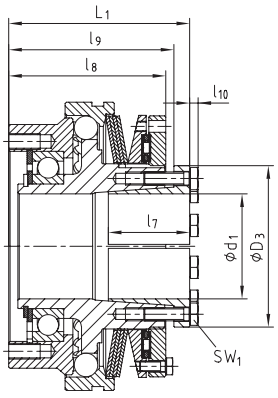

Technical data – Dimensions

Size	Speed [rpm] 1)	Torque [Nm]			Dimensions [mm]														
		T1	T2	T3	Bore d	D^{h5}	D_1	D_2	D_A	l_1	l_2	l_3	l_4	l_5	l_6	L	d_M	SW	H= stroke
01	4000	3-14	6-28	13-56	8-20	47	56	65	70	8	5	7,5	7	12	-	40	8xM4	7	1,2
0	3000	9-35	18-70	40-140	10-25	62	71	80	85	11	7	8,0	8	14	-	48	8xM5	7	1,5
1	2500	19-65	38-130	78-260	14-30	75	85	95	100	14	9	10,5	9	16	-	59	8xM6	8	1,8
2	2000	35-110	80-220	160-440	18-40	90	100	110	115	16	10	12	10	17	-	64	8xM6	10	2,0
3	1200	80-185	160-370	320-740	24-50	100	116	130	135	18	10	12	12	21	-	75	8xM8	10	2,2
4	400	230-730	460-1590	960-3100	40-75	145^{H7}	160	186	220	7	-	24	9	38,5	46,5	119	6xM12	13	3,5

Dimensions of hub type 4.5

Size	Bore 2)	Dimensions [mm]							
	d_1	D_3	l_7	l_8	l_9	l_{10}	L_1	SW_1	T_A [Nm]
01	10-20	40,5	26	40	42	2,8	47	7	3
	19-25	42,0							
0	19-30	57	31	46	49	4,0	56	10	10
1	19-30	57	40	57	60	4,0	67	10	10
	32-40	64	31			3,5		8	5,9
2	32-50	73,5	29	63	68,5	4,0	73	10	10
3	32-50	73,5	29	75	78,5	4,0	85	10	10
	55-60	89	44		78,0		86		
4	60-80	123	62	119	126	7	138	16	35

1) See comments on page 230
2) For transmittable friction torques T_R [Nm] of hub type 4.5 please refer to assembly instructions

Ordering example:

KTR-SI Compact 2	DK	4.5	T2	d_1 Ø40	150 Nm
Type / size	Type [DK/SK]	Hub type	Disk springs	Bore	Torque set

KTR-SI Compact FT
Backlash-free overload systems

With backlash-free ROTEX® GS

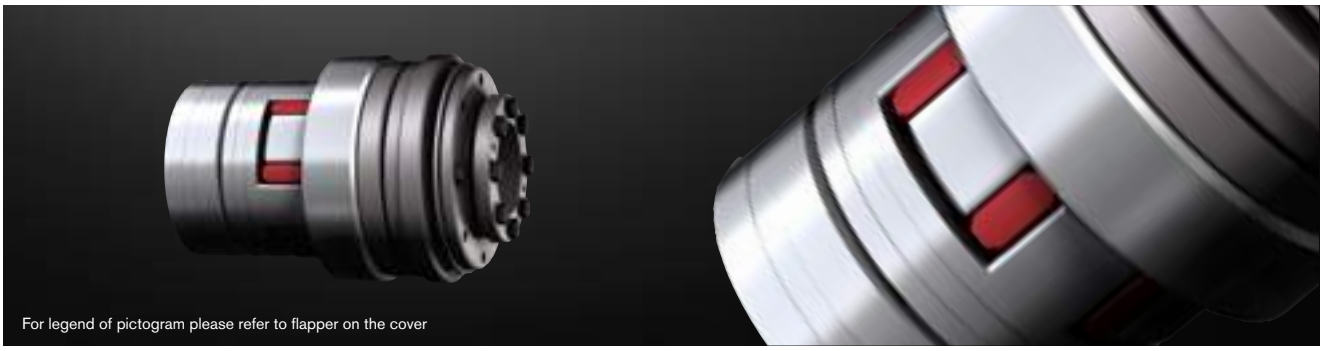

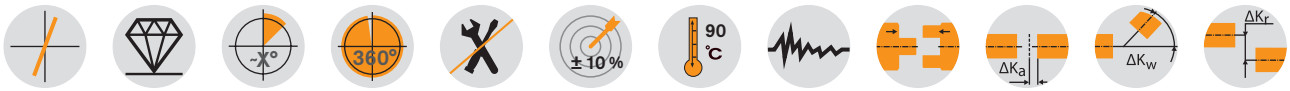

Hub type 1.0 Hub type 1.0 Hub type 6.0 Hub type 4.5

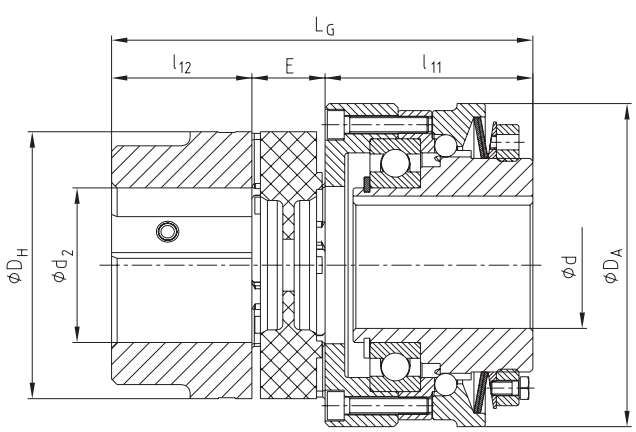

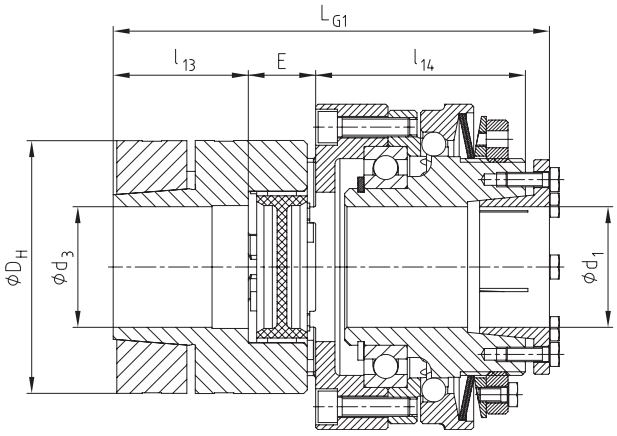

Technical data – Dimensions

Size	Max. speed [rpm][1]	Torques [Nm]			ROTEX® GS size[2]	Max. bore				Dimensions [mm]							
		T1	T2	T3		d	d_1	d_2	d_3	D_H	D_A	l_{11}	l_{13}	l_{14}	E	L_G	L_{G1}
01	4000	3-14	6-28	13-56	24	20	25	28	28	55	70	47	30	47	18	95	102
0	3000	9-35	18-70	40-140	28	25	30	38	38	65	85	56,5	35	54,5	20	111,5	119,5
1	2500	19-65	38-130	78-260	38	30	40	45	45	80	100	69	45	67	24	138	146
2	2000	35-110	80-220	160-440	42	40	50	50	55	95	115	74	50	73	26	150	159
3	1200	80-185	160-370	320-740	48	50	60	62	62	105	135	87	56	87	28	171	182
4	400	230-730	460-1590	960-3100	75	75	80	80	80	160	220	158,5	85	139,5	40	283,5	302,5

[1] See comments on page 230
[2] See selection of ROTEX® GS coupling on page 18 et seqq.

Ordering example:

KTR-SI Compact 1	DK	T2	4.5	d_1 Ø25	6.0 / d_3 Ø25	150 Nm
Type / size	Type [DK/SK]	Disk spring	KTR-SI hub type	KTR-SI bore	ROTEX® GS hub type/bore	Torque set

Special types

Other types and combinations available on request.



- KTR-SI Compact with IEC flange



Clamping elements and precision joints

CLAMPEX®

Types of clamping elements 264
Selection guide 266
Selection 267
Example of calculation/selection 268
Calculation of hubs and technical data 269
KTR 100 270
KTR 105 272
KTR 130 and KTR 131 274
KTR 150 276
KTR 200 and KTR 201 278
KTR 203 and KTR 206 280
KTR 225 282
KTR 250 284
KTR 400 286
KTR 603 288
KTR 620 292
KTR 700 296
Series on request 298

KTR clamping nuts

Large screw connections for easy and quick assembly 299

KTR Precision joints

Selection and sizing 300
Type G and GD with plain bearing 302
Type H and HD with needle bearing 303
Type GA and HA plain and needle bearing (extendable) 304
Type X and XD with plain bearing made of stainless steel 305
Type GR and HR with quick locking 306
Accessories (protection bushings) 307

Internal clamping elements



External clamping elements

Shaft couplings

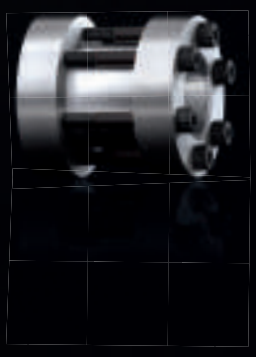

Precision joints



CLAMPEX® CLAMPING ELEMENTS
TYPES AND OPERATING DESCRIPTION

Properties of clamping elements

Type	Series		Shaft diameter [mm]	Transmittable torque T [Nm]	Centering of hub to shaft via the clamping element	Centering between hub and shaft required	Axial shifting of hub during assembly of clamping element	Details on page
Internal clamping elements	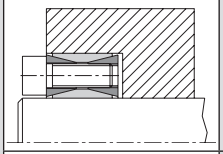	KTR100	17 — 1.000	260 — 3.017.100		●		270 271
	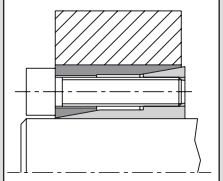	KTR 105	5 — 50	5 — 1.900	●		●	272 273
	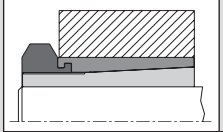	KTR130	5 — 50	10 — 2.320	●		●	274 275
	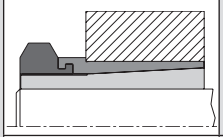	KTR 131	5 — 35	10 — 836	●		●	274 275
	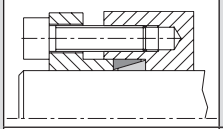	KTR 150	6 — 440	2 — 215.000		●	●*	276 277
	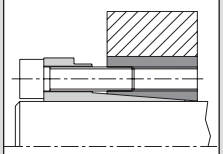	KTR 200	20 — 200	530 — 68.000	●		●	278 279
	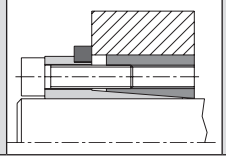	KTR 201	20 — 200	320 — 48.800	●			278 279

* Depending on mounting position

CLAMPEX® CLAMPING ELEMENTS
TYPES AND OPERATING DESCRIPTION

Type	Series		Shaft diameter [mm]	Transmittable torque T [Nm]	Centering of hub to shaft via the clamping element	Centering between hub and shaft required	Axial shifting of hub during assembly of clamping element	Details on page
Internal clamping elements	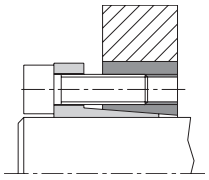	KTR 203	18 — 400	370 — 487.000	●		●	280 281
	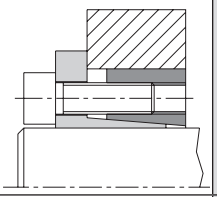	KTR 206	18 — 400	290 — 342.000	●			280 281
	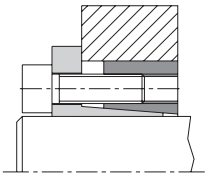	KTR 225	14 — 50	287 — 1.796	●			282 283
	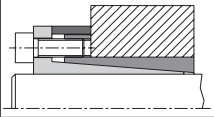	KTR 250	6 — 130	11 — 25.000	●			284 285
	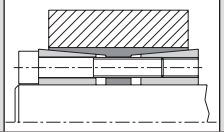	KTR 400	24 — 600	700 — 1.640.000	●		●	286 287
External clamping elements	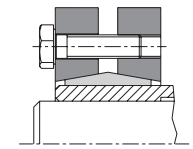	KTR 603	10 — 420	28 — 1.460.000	●			288 — 291
	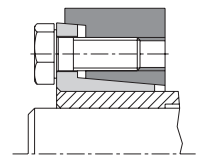	KTR 620	13 — 700	70 — 7.394.000	●			292 — 295
Shaft couplings	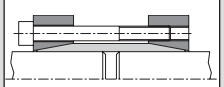	KTR 700	10 — 100	62 — 8.350	●			296 297

Selection guide

Selection guide for CLAMPEX® clamping elements

1.

Internal clamping sets
Positioned between shaft and hub.
Frictional engagement is generated between internal clamping set and shaft and between internal clamping set and hub.

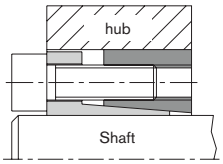

2

External clamping sets
Positioned on the hub/hollow shaft. Frictional engagement is generated between shaft and hub/hollow shaft.

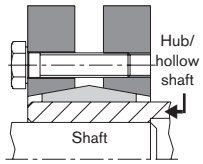

3

Shaft couplings
Positioned on two opposing shaft ends. Frictional engagement is generated between shaft coupling and shaft ends.

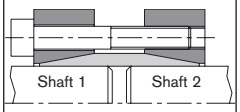

1.

Self-centering
Shaft and hub are centered to each other via an internal clamping set. Additional centering of hub is not required.

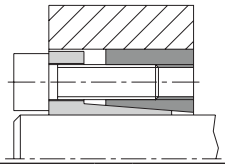

2

Not self-centering
Centering between shaft and hub required.

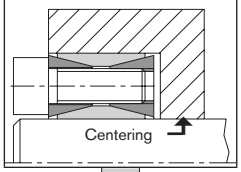

1

With axial shifting of hub
Axial shifting of hub during assembly of the internal clamping set. Hub axially shiftable to meet the catalogue data is required. [1)]

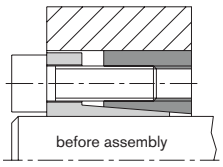

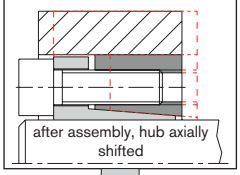

2

Without axial shifting of hub
No axial shifting of hub during assembly of the internal clamping set. Hub is fixed via the internal clamping set during assembly.

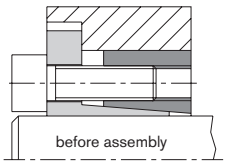

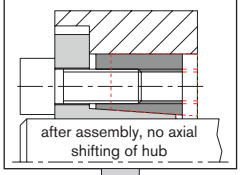

Selection of the series of clamping elements based on its geometry and performance data

KTR 105
KTR 130
KTR 131
KTR 200
KTR 203
KTR 400

Selection of the series of clamping elements based on its geometry and performance data

KTR 201
KTR 206
KTR 225
KTR 250

Selection of the series of clamping elements based on its geometry and performance data

KTR 100
KTR 150

Selection of the series of clamping elements based on its geometry and performance data

KTR 603
KTR 620

Selection of the series of clamping elements based on its geometry and performance data

KTR 700

[1)] Does not apply for KTR 400

Selection

Symbol	Definition or explanation
$\sigma_{N0,2}$	Yield point of hub material [N/mm²]
$\sigma_{W0,2}$	Yield point of shaft material [N/mm²]
C	Value C of hub design (see illustration on page 253)
d	Internal diameter of clamping element [mm]
d_{iw}	Internal diameter of hollow shaft [mm]
D	External diameter of clamping element [mm]
D_N	External diameter of hub required [mm]
T	Transmittable torque [Nm]
T_S	Peak torque to be transmitted [Nm]
T_A	Screw tightening torque [Nm]
B_2/B_3	Length of clamping element [mm]

Symbol	Definition or explanation
L/L_1	Hub length [mm]
P_N	Surface pressure generated on the clamping element/hub [N/mm²]
P_W	Surface pressure generated on the clamping element/shaft [N/mm²]
C_W	d_{iW}/d -> Ratio of internal diameter of hollow shaft/clamping element
C_N	D/D_N -> Ratio of external diameter of clamping element/hub
F_a	Axial force generated during operation [kN]
F_{ax}	Transmittable axial force [kN]
F_V	Preload force [N]
P_O	Setting force for clamping element [N]
P_S	Clamping force for clamping element [N]
P_A	$P_O + P_S =$ Total force for clamping element [N]

The transmission data are parameters found out by calculations. Subject to the friction coefficient variation which is due to physical properties, small deviations with the transmission figures may appear.

1. Fatigue strength and shape stability of components subject to torsion and bending load
The stress concentration figures β_k for the clamping elements are worked out similar to those of hydraulic fittings. Stress concentration factor on request.

2. Transmittable torque T
The transmittable torque T always has to be above the biggest torque peak T_S, which may arise on the joints. The torque peaks occurring with acceleration of electric motors as well as additional axial forces F_a have to be considered.

$$T \geq \sqrt{T_S\,[Nm]^2 + \left(F_a\,[kN] \bullet \frac{d\,[mm]}{2}\right)^2}$$

3. Transmittable axial force F_{ax}
The maximum transmittable axial force F_{ax} specified in the tables has to be reduced accordingly with additional torque transmission.

$$F_{ax}\,[kN] = 2 \bullet \frac{T\,[Nm]}{d\,[mm]}$$

4. Calculation of external diameter of hub D_N
The external diameter of hub D_N required depends on the hub geometry, the yield point of the hub material and the surface pressure between clamping element and hub. In order to simplify the calculation, the table on page 269 specifies correcting values which allow to calculate D_N.

$$D_N\,[mm] \geq D \bullet \text{correcting value x}$$

Those external diameters of hubs which cannot be calculated based on the table are calculated via the following formula:

$$D_N \geq D \bullet \sqrt{\frac{\sigma_{N0.2} + P_N \bullet C}{\sigma_{N0.2} - P_N \bullet C}}$$

Tangential stress on the internal diameter of hub

$$\sigma_{tiN} \approx P_N \bullet \frac{(1 + C_N^2)}{(1 - C_N^2)} \bullet C$$

For clamping connections with hollow shafts the internal diameter of hollow shaft d_{iW} required is calculated via the following formula:

$$d_{iw} \leq d \bullet \sqrt{\frac{\sigma_{W0.2} - 2 \bullet P_W \bullet 0{,}8}{\sigma_{W0.2}}}$$

Tangential stress on the internal diameter of shaft

$$\sigma_{tiW} \approx \frac{2 \bullet P_W}{(C_W^2 - 1)}$$

Example of calculation/selection

Details given:

Shaft diameter d:	50 mm
Hub material:	GGG 40
Yield point of material $\sigma_{0,2}$	250 N/mm²

Selected:

Not self-centering internal clamping element		KTR 100 with d x D = 50mm x 80mm
→ Surface pressure of hub taken from table on page 271		P_N = 132 N/mm²
→ Approximate value for surface pressure of hub taken from table on page 269		P_N = 135 N/mm²
→ Hub type selected		C=0.8 (value C of hub design see page 269)
→ Yield point of material $\sigma_{0,2}$	250 N/mm²	Correcting values x 1.59 (see page 269)
		D_N [mm] ≥ 80 mm • 1,59 → D_N ≥ 127,2 mm

Use in explosive locations

The power transmission of CLAMPEX® clamping elements is based on the principle of two taper rings twisted into each other. An axial force generated on the rings (by means of several screws) produces surface pressure inside the hub and outside the shaft which allows for a frictionally engaged transmission of the torque. Considering all operating data (intended use) a potenial source of ignition does not exist. That is why clamping elements are not covered by directive 94/9/EC.
Due to the aforementioned design of CLAMPEX® clamping elements a failure of components does not have to be expected. A risk only arises if friction heat is produced with slipping of a clamping connection (improper assembly/tightening torques).

Concentricity

The concentricity of the self-centering CLAMPEX® clamping elements is between 0.02 mm and 0.08 mm. This concentricity is not reproducible due to the slotted individual components of the clamping elements. As a result this figure merely serves for supporting with designing.

Table of screws

Dimension M	Preload force F_V and tightening torque T_A with μ_{total} = 0.14					
	Preload force F_V [N]			Tightening torque T_A [Nm]		
	8.8	10.9	12.9	8.8	10.9	12.9
M3	2210	3110	3730	1,34	1,89	2,25
M4	3900	5450	6550	2,9	4,1	4,9
M5	6350	8950	10700	6	8,5	10
M6	9000	12600	15100	10	14	17
M8	16500	23200	27900	25	35	41
M10	26200	36900	44300	49	69	83
M12	38300	54000	64500	86	120	145
M14	52500	74000	88500	135	190	230
M16	73000	102000	123000	210	295	355
M18	88000	124000	148000	290	405	485
M20	114000	160000	192000	410	580	690
M22	141000	199000	239000	550	780	930
M24	164000	230000	276000	710	1000	1200
M27	215000	302000	363000	1050	1500	1800
M30	262000	368000	442000	1450	2000	2400

For continuously updated data please refer to our online catalogue at www.ktr.com

Calculation of hubs

Mounting conditions of clamping elements with value C of hub design

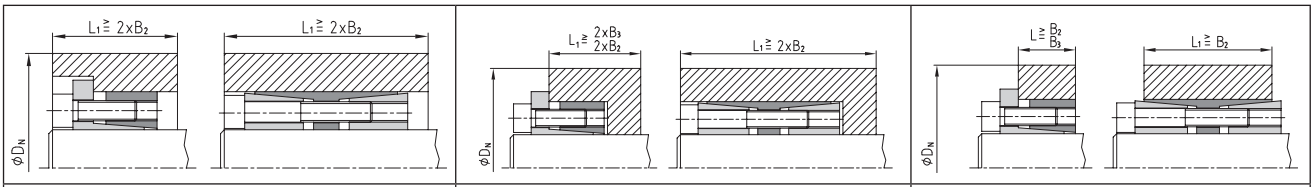

C = 0.6 position of clamping element centrally to the hub | C = 0.8 position of clamping element eccentrically to the hub | C = 1,0

Selection table for the calculation of the external diameter of hub D_N required (correcting value x)

Surface pressure between clamping element and hub		Average yield point of material σ 0,2 in N/mm² (more accurate stiffness figures depending on diameter as specified by the manufacturer)										
		150	180	200	220	250	270	300	350	400	450	600
		Hub materials										
P_N [N/mm²]	Value C of hub design	GG 20	GG 25 GS 38	GG 30 GTS 35	GS 45 ST 37-2	GGG 40 GS 52 AlCuMgPb	ST 50-2 C 35	GGG 50 GS 60 ST 52-3	GGG 60 GS 62 C 45	GGG 70 GS 70 C 60	Q & T steel	Q & T steel
	C = 0,6	1,30	1,25	1,22	1,20	1,18	1,15	1,13	1,11	1,10	1,09	1,07
65	C = 0,8	1,44	1,35	1,30	1,28	1,24	1,22	1,20	1,16	1,14	1,12	1,09
	C = 1,0	1,60	1,45	1,40	1,35	1,30	1,28	1,24	1,20	1,18	1,16	1,12
	C = 0,6	1,34	1,26	1,24	1,22	1,18	1,16	1,15	1,12	1,11	1,10	1,07
70	C = 0,8	1,48	1,38	1,34	1,30	1,25	1,23	1,20	1,18	1,15	1,13	1,10
	C = 1,0	1,65	1,50	1,45	1,40	1,34	1,30	1,26	1,22	1,20	1,17	1,13
	C = 0,6	1,30	1,28	1,25	1,23	1,20	1,18	1,16	1,14	1,12	1,11	1,08
75	C = 0,8	1,52	1,42	1,36	1,32	1,28	1,25	1,22	1,18	1,16	1,14	1,11
	C = 1,0	1,74	1,55	1,48	1,42	1,36	1,33	1,30	1,25	1,20	1,18	1,13
	C = 0,6	1,39	1,31	1,28	1,25	1,21	1,20	1,18	1,15	1,13	1,11	1,08
80	C = 0,8	1,58	1,45	1,39	1,35	1,30	1,27	1,24	1,20	1,18	1,15	1,11
	C = 1,0	1,81	1,61	1,53	1,46	1,39	1,36	1,31	1,26	1,22	1,20	1,14
	C = 0,6	1,42	1,34	1,30	1,27	1,23	1,21	1,19	1,16	1,14	1,12	1,09
85	C = 0,8	1,63	1,49	1,42	1,38	1,32	1,29	1,26	1,22	1,19	1,16	1,12
	C = 1,0	1,90	1,67	1,57	1,50	1,42	1,39	1,34	1,28	1,24	1,21	1,15
	C = 0,6	1,46	1,36	1,32	1,28	1,25	1,22	1,20	1,17	1,15	1,13	1,09
90	C = 0,8	1,69	1,53	1,46	1,40	1,34	1,31	1,28	1,23	1,20	1,18	1,13
	C = 1,0	2,00	1,73	1,62	1,54	1,46	1,41	1,36	1,30	1,26	1,22	1,16
	C = 0,6	1,49	1,39	1,34	1,30	1,26	1,24	1,21	1,18	1,15	1,14	1,10
95	C = 0,8	1,75	1,57	1,49	1,43	1,37	1,34	1,30	1,25	1,21	1,19	1,14
	C = 1,0	2,11	1,80	1,68	1,59	1,49	1,44	1,39	1,32	1,27	1,24	1,17
	C = 0,6	1,53	1,41	1,36	1,32	1,28	1,25	1,22	1,19	1,16	1,14	1,11
100	C = 0,8	1,81	1,61	1,53	1,46	1,39	1,36	1,31	1,26	1,22	1,20	1,14
	C = 1,0	2,24	1,87	1,73	1,63	1,53	1,48	1,41	1,34	1,29	1,25	1,18
	C = 0,6	1,56	1,44	1,39	1,34	1,29	1,27	1,24	1,20	1,17	1,15	1,11
105	C = 0,8	1,88	1,66	1,56	1,50	1,42	1,38	1,33	1,28	1,24	1,21	1,15
	C = 1,0	2,38	1,95	1,79	1,68	1,56	1,51	1,44	1,36	1,31	1,27	1,19
	C = 0,6	1,60	1,47	1,41	1,36	1,31	1,28	1,25	1,21	1,18	1,16	1,12
110	C = 0,8	1,96	1,71	1,60	1,53	1,44	1,40	1,35	1,29	1,25	1,22	1,16
	C = 1,0	2,55	2,04	1,86	1,73	1,60	1,54	1,47	1,38	1,33	1,28	1,20
	C = 0,6	1,64	1,50	1,43	1,36	1,33	1,30	1,26	1,22	1,19	1,17	1,12
115	C = 0,8	2,04	1,76	1,64	1,56	1,47	1,43	1,37	1,31	1,26	1,23	1,17
	C = 1,0	2,75	2,13	1,93	1,79	1,64	1,58	1,50	1,41	1,34	1,30	1,21
	C = 0,6	1,69	1,53	1,46	1,40	1,34	1,31	1,28	1,23	1,20	1,18	1,13
120	C = 0,8	2,13	1,81	1,69	1,60	1,50	1,45	1,39	1,33	1,28	1,24	1,18
	C = 1,0	3,00	2,24	2,00	1,84	1,69	1,61	1,53	1,43	1,36	1,31	1,22
	C = 0,6	1,73	1,56	1,48	1,43	1,36	1,33	1,29	1,24	1,21	1,18	1,13
125	C = 0,8	2,24	1,87	1,73	1,63	1,53	1,48	1,41	1,34	1,29	1,25	1,18
	C = 1,0	3,32	2,35	2,08	1,91	1,73	1,65	1,56	1,45	1,38	1,33	1,24
	C = 0,6	1,78	1,59	1,51	1,45	1,38	1,35	1,30	1,25	1,22	1,19	1,14
130	C = 0,8	2,35	1,93	1,78	1,67	1,56	1,50	1,44	1,36	1,30	1,27	1,19
	C = 1,0	3,74	2,49	2,17	1,97	1,78	1,69	1,59	1,48	1,40	1,35	1,25
	C = 0,6	1,83	1,62	1,54	1,47	1,40	1,36	1,32	1,27	1,23	1,20	1,15
135	C = 0,8	2,48	2,00	1,83	1,71	1,59	1,53	1,46	1,38	1,32	1,28	1,20
	C = 1,0	4,36	2,65	2,27	2,04	1,83	1,73	1,62	1,50	1,42	1,36	1,26
	C = 0,6	1,88	1,66	1,56	1,50	1,42	1,38	1,33	1,28	1,24	1,21	1,15
140	C = 0,8	2,63	2,07	1,88	1,75	1,62	1,55	1,48	1,39	1,33	1,29	1,21
	C = 1,0	5,39	2,83	2,38	2,12	1,88	1,78	1,66	1,53	1,44	1,38	1,27
	C = 0,6	1,94	1,69	1,59	1,52	1,44	1,40	1,35	1,29	1,25	1,22	1,16
145	C = 0,8	2,80	2,15	1,94	1,80	1,65	1,58	1,50	1,41	1,35	1,30	1,22
	C = 1,0	7,68	3,05	2,50	2,21	1,94	1,82	1,69	1,55	1,46	1,40	1,28
	C = 0,6	2,00	1,73	1,62	1,54	1,46	1,41	1,36	1,30	1,26	1,23	1,16
150	C = 0,8	3,00	2,24	2,0	1,84	1,69	1,61	1,53	1,43	1,36	1,31	1,23
	C = 1,0	–	3,32	2,65	2,30	2,00	1,87	1,73	1,58	1,48	1,41	1,29
	C = 0,6	2,06	1,77	1,65	1,57	1,48	1,43	1,38	1,31	1,27	1,24	1,17
155	C = 0,8	3,25	2,33	2,06	1,89	1,72	1,65	1,55	1,45	1,38	1,33	1,23
	C = 1,0	–	3,66	2,80	2,40	2,06	1,92	1,77	1,61	1,51	1,43	1,30
	C = 0,6	2,13	1,81	1,69	1,60	1,50	1,45	1,39	1,33	1,28	1,24	1,18
160	C = 0,8	3,55	2,43	2,13	1,94	1,76	1,67	1,58	1,47	1,39	1,34	1,24
	C = 1,0	–	4,12	3,00	2,52	2,13	1,98	1,81	1,64	1,53	1,45	1,31
	C = 0,6	2,21	1,86	1,72	1,62	1,52	1,47	1,41	1,34	1,29	1,25	1,18
165	C = 0,8	3,96	2,55	2,21	2,00	1,80	1,71	1,60	1,49	1,41	1,35	1,25
	C = 1,0	–	4,80	3,23	2,65	2,21	2,04	1,86	1,67	1,55	1,47	1,33

Not self-centering clamping element suitable for large shaft and hub tolerances

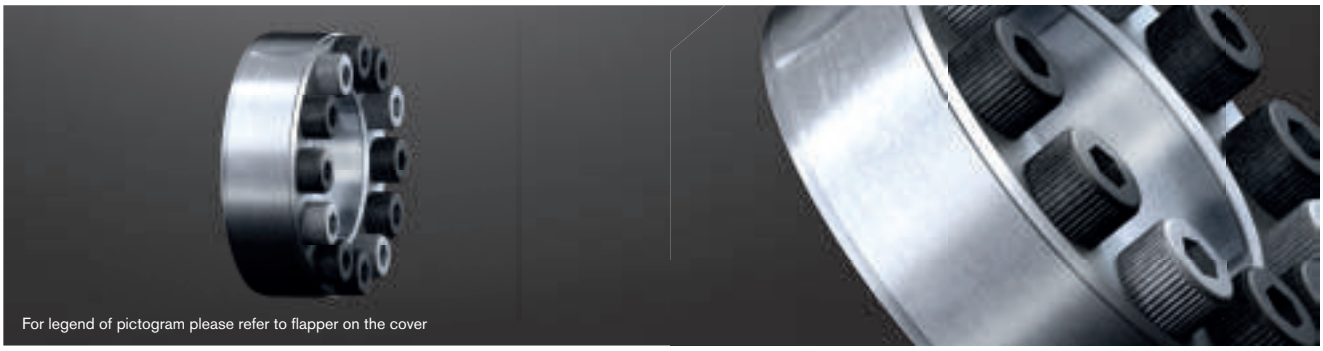



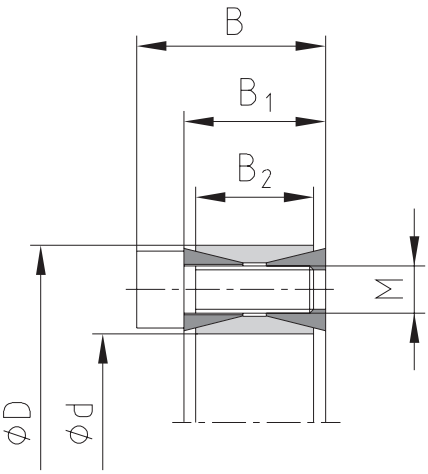

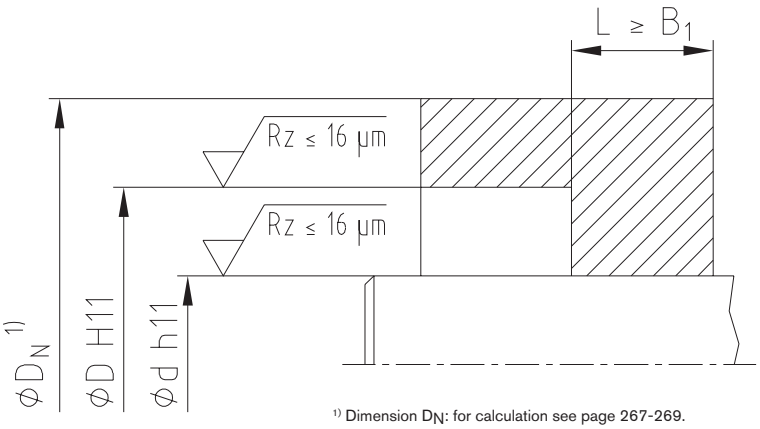

[1] Dimension D_N: for calculation see page 267-269.

Example of application of hub type

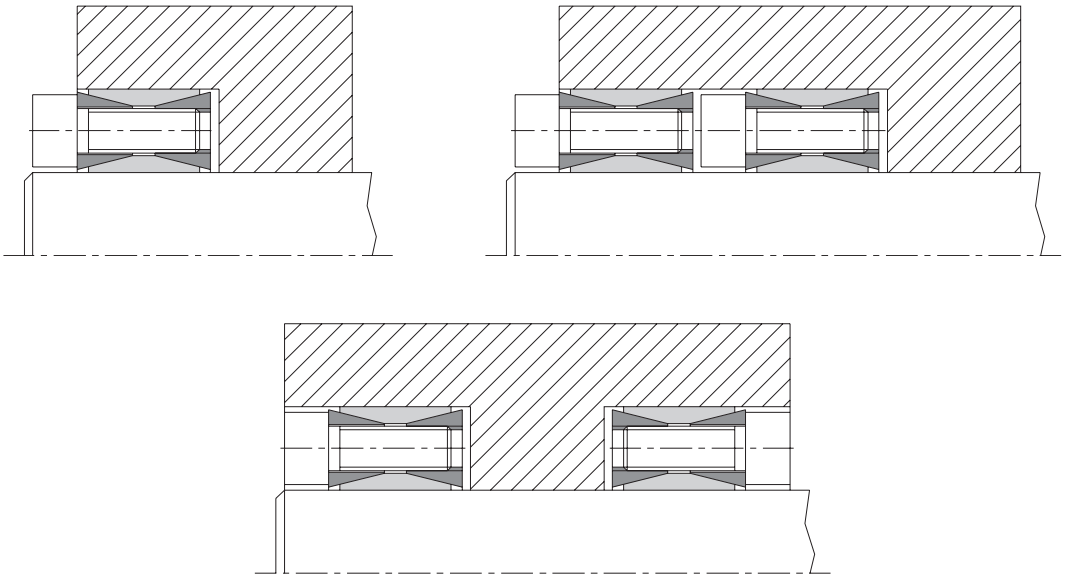

● Sizes of clamping elements available from stock.
[1] These are the maximum screw tightening torques. They can be reduced by a maximum of 40 % of the above-mentioned figures with T, F_{ax}, P_W and P_N decreasing proportionately.

Ordering example:

KTR 100	50	x	80
Series	Size of internal diameter d		Size of external diameter D

CLAMPEX® – KTR 100

	d x D [mm]	Dimensions [mm]			Clamping screws DIN EN ISO 4762 - 12.9 μ_{total}=0.14				Transmittable torque or axial force		Surface pressure between clamping element		Weight [~kg]	Stock programme
		B	B_1	B_2	M	Length	Number z	T_A [Nm] 1)	T [Nm]	F_{ax} [kN]	Shaft P_W [N/mm²]	Hub P_N [N/mm²]		
NEW	17 x 47	26	20	17	M6	18	8	16	260	31	281	102	0,2	
	18 x 47	26	20	17	M6	18	8	16	280	31	270	103	0,2	
	19 x 47	26	20	17	M6	18	8	16	290	31	251	101	0,2	●
	20 x 47	26	20	17	M6	18	8	16	310	31	242	103	0,2	●
	22 x 47	26	20	17	M6	18	8	16	340	31	219	103	0,2	●
	24 x 50	26	20	17	M6	18	8	16	370	31	200	96	0,3	●
	25 x 50	26	20	17	M6	18	8	16	390	31	195	97	0,3	●
	28 x 55	26	20	17	M6	18	12	16	650	46	259	132	0,3	●
	30 x 55	26	20	17	M6	18	12	16	700	47	243	132	0,3	●
	32 x 60	26	20	17	M6	18	12	16	750	47	229	122	0,3	●
	35 x 60	26	20	17	M6	18	12	16	820	47	209	122	0,3	●
	38 x 65	26	20	17	M6	18	15	16	1100	58	238	139	0,4	●
	40 x 65	26	20	17	M6	18	15	16	1170	59	228	140	0,3	●
	42 x 75	32	24	20	M8	22	12	40	1670	80	251	141	0,6	●
	45 x 75	32	24	20	M8	22	12	40	1790	80	234	141	0,5	●
	48 x 80	32	24	20	M8	22	12	40	1900	79	219	131	0,6	●
	50 x 80	32	24	20	M8	22	12	40	1990	80	211	132	0,6	●
	55 x 85	32	24	20	M8	22	15	40	2740	100	240	155	0,6	●
	60 x 90	32	24	20	M8	22	15	40	2990	100	220	147	0,7	●
	65 x 95	32	24	20	M8	22	15	40	3240	100	203	139	0,8	●
	70 x 110	38	28	24	M10	25	15	78	5550	159	250	159	1,3	●
	75 x 115	38	28	24	M10	25	15	78	5950	159	234	152	1,2	●
	80 x 120	38	28	24	M10	25	15	78	6350	159	219	146	1,4	●
	85 x 125	38	28	24	M10	25	15	78	6740	159	206	140	1,4	●
	90 x 130	38	28	24	M10	25	15	78	7140	159	195	135	1,5	●
	95 x 135	38	28	24	M10	25	18	78	9000	189	220	155	1,6	●
	100 x 145	44	32	26	M12	30	15	135	11600	232	237	163	2,2	●
	110 x 155	44	32	26	M12	30	15	135	12750	232	215	153	2,3	●
	120 x 165	44	32	26	M12	30	16	135	14800	247	210	153	2,4	●
	130 x 180	50	38	34	M12	30	20	135	20150	310	186	134	3,5	●
	140 x 190	50	38	34	M12	30	22	135	23850	341	190	140	3,8	●
	150 x 200	50	38	34	M12	30	24	135	27850	371	193	145	4,0	●
	160 x 210	50	38	34	M12	30	26	135	32200	403	196	150	4,4	●
	170 x 225	58	44	38	M14	45	22	215	40300	474	195	147	5,7	●
	180 x 235	58	44	38	M14	45	24	215	46600	518	201	154	6,0	●
	190 x 250	66	52	46	M14	45	28	215	57300	603	183	139	8,0	●
	200 x 260	66	52	46	M14	45	30	215	71000	710	205	157	8,2	●
	220 x 285	72	56	50	M16	50	26	335	93200	847	204	158	11,0	●
	240 x 305	72	56	50	M16	50	30	335	117300	978	216	170	12,2	
	260 x 325	72	56	50	M16	50	34	335	144000	1108	226	181	13,2	
	280 x 355	84	66	60	M18	60	32	465	177700	1269	200	158	19,2	
	300 x 375	84	66	60	M18	60	36	465	214100	1427	210	168	20,5	
	320 x 405	98	78	72	M20	70	36	660	295800	1849	213	168	29,6	
	340 x 425	98	78	72	M20	70	36	660	314300	1849	200	160	31,1	
	360 x 455	112	90	84	M22	80	36	900	413300	2296	201	159	42,2	
	380 x 475	112	90	84	M22	80	36	900	436300	2296	191	153	44,0	
	400 x 495	112	90	84	M22	80	36	900	459300	2297	181	147	46,0	
	420 x 515	112	90	84	M22	80	40	900	535800	2551	192	156	50,0	
	440 x 545	130	102	96	M24	90	40	1130	647600	2944	185	149	64,6	
	460 x 565	130	102	96	M24	90	40	1130	677000	2943	177	144	67,4	
	480 x 585	130	102	96	M24	90	42	1130	741800	3091	178	146	71,0	
	500 x 605	130	102	96	M24	90	44	1130	809500	3238	179	148	72,6	
	520 x 630	130	102	96	M24	90	45	1130	861000	3312	176	145	80	
	540 x 650	130	102	96	M24	90	45	1130	894000	3311	169	141	82	
	560 x 670	130	102	96	M24	90	48	1130	989000	3532	174	146	85	
	580 x 690	130	102	96	M24	90	50	1130	1067000	3679	175	147	88	
	600 x 710	130	102	96	M24	90	50	1130	1103800	3679	169	143	91	
NEW	620 x 730	130	102	96	M24	90	52	1130	1186200	3826	171	145	93	
NEW	640 x 750	130	102	96	M24	90	54	1130	1271600	3974	172	146	96	
NEW	660 x 770	130	102	96	M24	90	56	1130	1359900	4121	173	148	99	
NEW	680 x 790	130	102	96	M24	90	56	1130	1401100	4121	167	144	102	
NEW	700 x 810	130	102	96	M24	90	60	1130	1545400	4415	174	151	104	
NEW	720 x 830	130	102	96	M24	90	60	1130	1589500	4415	169	147	107	
NEW	740 x 850	130	102	96	M24	90	62	1130	1688100	4562	170	148	110	
NEW	760 x 870	130	102	96	M24	90	64	1130	1789700	4710	171	150	113	
NEW	780 x 890	130	102	96	M24	90	65	1130	1865500	4783	169	149	116	
NEW	800 x 910	130	102	96	M24	90	66	1130	1942700	4857	168	147	118	
NEW	820 x 930	130	102	96	M24	90	68	1130	2051600	5004	169	149	121	
NEW	840 x 950	130	102	96	M24	90	70	1130	2163500	5151	169	150	124	
NEW	860 x 970	130	102	96	M24	90	72	1130	2278300	5298	170	151	127	
NEW	880 x 990	130	102	96	M24	90	74	1130	2396000	5445	171	152	129	
NEW	900 x 1010	130	102	96	M24	90	75	1130	2483600	5519	169	151	132	
NEW	920 x 1030	130	102	96	M24	90	76	1130	2572600	5593	168	150	135	
NEW	940 x 1050	130	102	96	M24	90	78	1130	2697700	5740	169	151	138	
NEW	960 x 1070	130	102	96	M24	90	80	1130	2825800	5887	169	152	140	
NEW	980 x 1090	130	102	96	M24	90	81	1130	2920700	5961	168	151	143	
NEW	1000 x 1110	130	102	96	M24	90	82	1130	3017100	6034	167	150	146	

Self-centering clamping element in a compact design





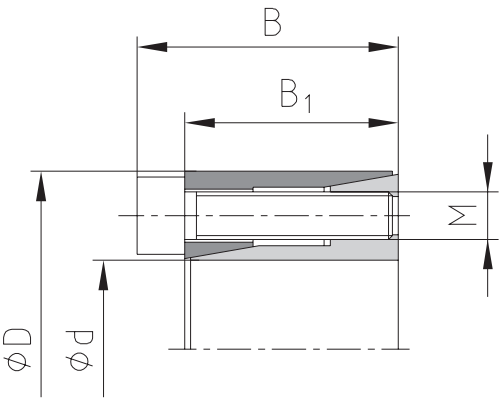

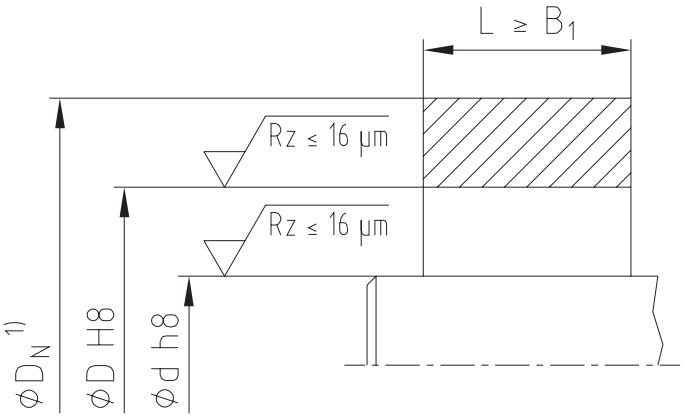

[1] Dimension D_N: for calculation see page 267-269.

Example of application of hub type

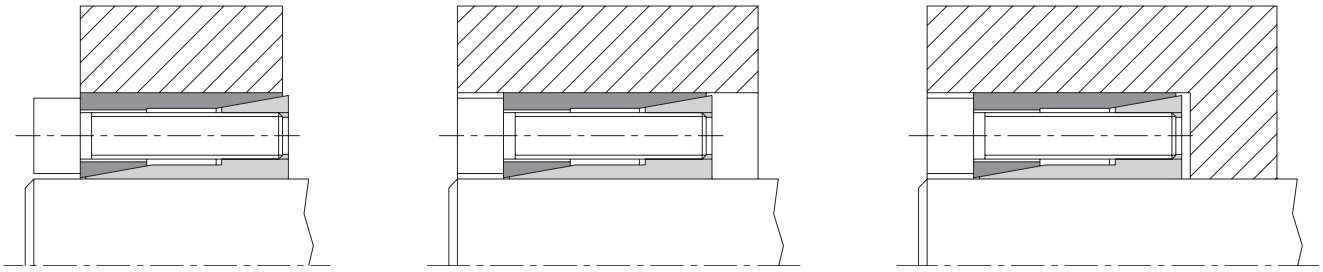

Ordering example:	KTR 105	8	x	18
	Series	Size of internal diameter d		Size of external diameter D

CLAMPEX® – KTR 105

d x D [mm]	Dimensions [mm]		Clamping screws DIN EN ISO 4762 - 12.9 μ_{total}=0.14				Transmittable torque or axial force		Surface pressure between clamping element		Weight [~kg]	Stock programme
	B	B1	M	Length	Number z	T_A [Nm] [1]	T [Nm]	F_{ax} [kN]	Shaft P_W [N/mm²]	Hub P_N [N/mm²]		
5 x 16	13,5	11	M2,5	10	3	1,2	5	2	177	55	0,01	
6 x 16	13,5	11	M2,5	10	3	1,2	6	2	147	55	0,01	●
6,35 x 16	13,5	11	M2,5	10	3	1,2	6	2	132	52	0,01	●
7 x 17	13,5	11	M2,5	10	3	1,2	8	2	144	59	0,01	●
8 x 18	13,5	11	M2,5	10	3	1,2	10	3	138	61	0,02	●
9 x 20	15,5	13	M2,5	12	4	1,2	15	3	140	63	0,02	●
9,53 x 20	15,5	13	M2,5	12	4	1,2	15	3	125	60	0,02	
10 x 20	15,5	13	M2,5	12	4	1,2	15	3	114	57	0,02	●
11 x 22	15,5	13	M2,5	12	4	1,2	18	3	113	56	0,02	●
12 x 22	15,5	13	M2,5	12	4	1,2	20	3	105	57	0,02	●
14 x 26	20	17	M3	16	4	2,1	35	5	105	57	0,04	●
15 x 28	20	17	M3	16	4	2,1	40	5	94	51	0,04	●
16 x 32	21	17	M4	16	4	4,9	70	9	132	66	0,07	●
17 x 35	25	21	M4	20	4	4,9	75	9	125	61	0,09	●
18 x 35	25	21	M4	20	4	4,9	80	9	119	61	0,09	●
19 x 35	25	21	M4	20	4	4,9	85	9	114	62	0,08	●
20 x 38	26	21	M5	20	4	9,7	150	15	153	81	0,1	●
22 x 40	26	21	M5	20	4	9,7	160	15	135	74	0,1	●
24 x 47	32	26	M6	25	4	16,5	250	21	154	78	0,2	●
25 x 47	32	26	M6	25	4	16,5	260	21	147	78	0,2	●
28 x 50	32	26	M6	25	6	16,5	440	31	198	111	0,2	●
30 x 55	32	26	M6	25	6	16,5	470	31	185	101	0,3	●
32 x 55	32	26	M6	25	6	16,5	500	31	173	100	0,25	●
35 x 60	37	31	M6	30	8	16,5	730	42	166	97	0,35	●
38 x 65	37	31	M6	30	8	16,5	800	42	155	90	0,4	●
40 x 65	37	31	M6	30	8	16,5	840	42	147	90	0,4	●
42 x 75	44	36	M8	35	6	40	911	43	125	70	0,7	●
45 x 75	44	36	M8	35	8	40	1300	58	155	93	0,6	●
48 x 80	44	36	M8	35	8	40	1824	76	191	115	0,7	
50 x 80	44	36	M8	35	8	40	1900	76	183	115	0,7	●

● Sizes of clamping elements available from stock.

[1] These are the maximum screw tightening torques. They can be reduced by a maximum of 40 % of the figures specified above with T, F_{ax}, P_W and P_N decreasing proportionally.

CLAMPEX® KTR 130 and KTR 131
Clamping elements

Self-centering clamping elements with a central clamping nut for easy assembly/disassembly

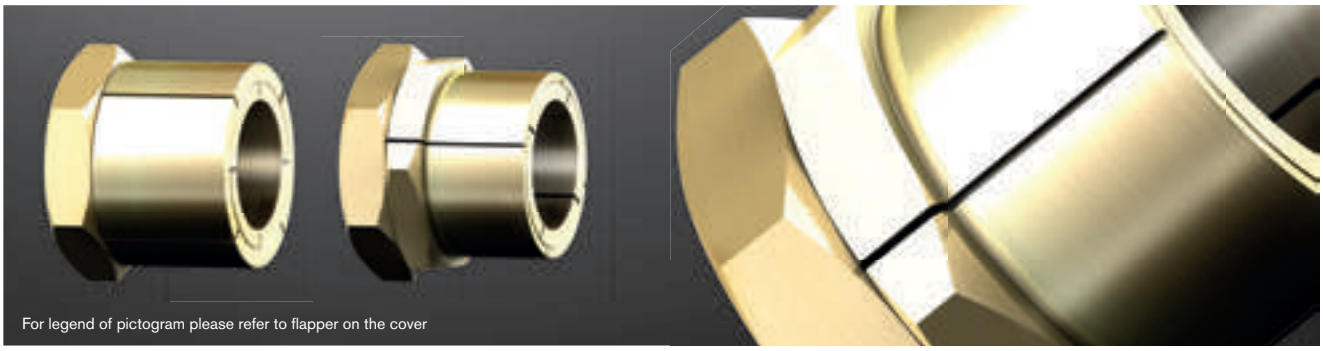



KTR 130

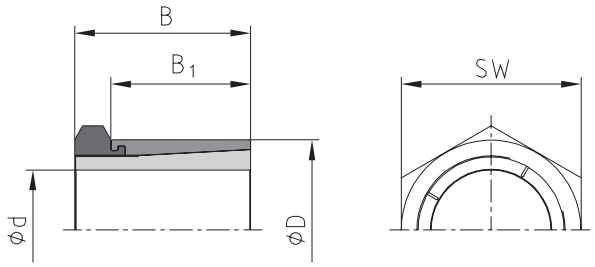

KTR 131

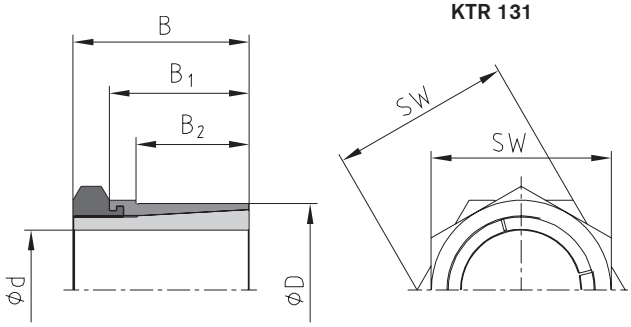

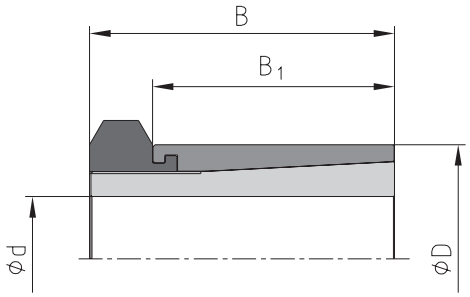

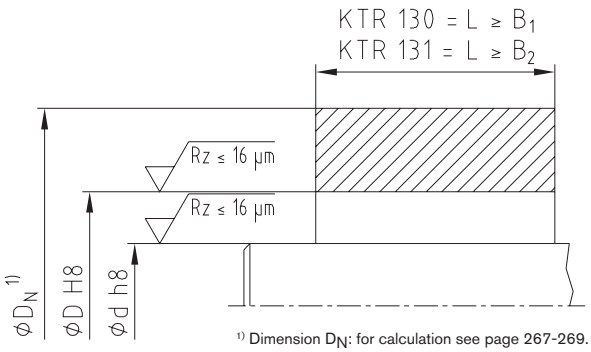

[1] Dimension D_N: for calculation see page 267-269.

Example of application of hub type

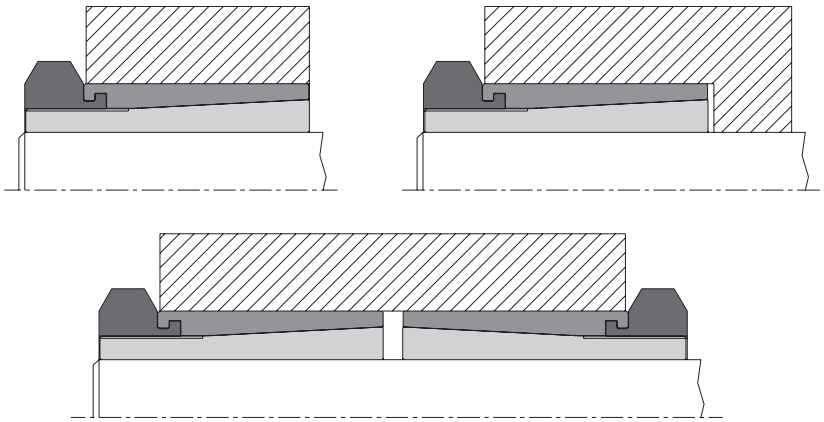

Ordering example:	KTR 130	18	x	35
	Series	Size of internal diameter d		Size of external diameter D

CLAMPEX® – KTR 130

d x D [mm]	Dimensions [mm]		Hexagon nut		Transmittable torque or axial force		Surface pressure between clamping element		Weight [~kg]	Stock programme
	B	B_1	Width across flats SW	T_A [Nm] 1)	T [Nm]	F_{ax} [kN]	Welle P_W [N/mm²]	Nabe P_N [N/mm²]		
5 x 14	19	15	14	10	10,1	4,0	264	96	0,02	●
6 x 14	19	15	14	10	12,1	4,0	220	96	0,02	●
8 x 16	22	17	17	17	23,4	5,8	179	91	0,02	●
9 x 20	24	19	22	35	43,2	9,7	248	112	0,04	●
10 x 20	24	19	22	35	48,6	9,7	223	112	0,05	●
12 x 22	24	19	22	44	65,3	10,9	206	117	0,05	●
14 x 26	28	22	27	65	93,0	13,3	178	99	0,08	●
15 x 26	28	22	27	65	99,0	13,3	166	99	0,08	●
16 x 26	28	22	27	65	106	13,3	156	99	0,07	●
18 x 35	36	27	36	161	223	24,8	224	125	0,2	●
19 x 35	36	27	36	161	235	24,8	212	125	0,2	●
20 x 35	36	27	36	161	248	24,8	201	125	0,2	●
22 x 42	41	30	46	250	349	31,8	197	110	0,3	●
24 x 42	41	30	46	250	381	31,8	180	110	0,3	●
25 x 42	41	30	46	250	397	31,8	173	110	0,3	●
30 x 47	44	33	50	355	605	40,4	162	110	0,4	●
32 x 55	51	38	55	490	764	47,8	166	102	0,6	
35 x 55	51	38	55	490	836	47,8	151	102	0,6	●
40 x 62	58	43	65	800	1329	66,5	152	98	0,8	●
45 x 65	63	48	65	900	1605	71,0	142	98	0,9	●
48 x 75	73	58	75	1290	2227	92,0	121	77	1,5	
50 x 75	73	58	75	1290	2320	92,0	116	77	1,4	●

● Sizes of clamping elements available from stock.
1) These are the maximum screw tightening torques. They can be reduced by a maximum of 40 % of the figures specified above, with T, F_{ax}, P_W and P_N decreasing proportionally.

CLAMPEX® – KTR 131

d x D [mm]	Dimensions [mm]			Hexagon nut/counter nut		Transmittable torque or axial force		Surface pressure between clamping element		Weight [~kg]	Stock programme
	B	B_1	B_2	Width across flats SW	T_A [Nm] 1)	T [Nm]	F_{ax} [kN]	Welle P_W [N/mm²]	Nabe P_N [N/mm²]		
5 x 12	19	15	9	14	10	10,1	4,0	264	119	0,02	●
6 x 12	19	15	9	14	10	12,1	4,0	220	119	0,02	●
8 x 14	22	17	11	17	17	23,4	5,8	179	121	0,02	●
10 x 18	24	19	12	22	35	48,6	9,7	221	127	0,04	●
12 x 20	24	19	12	22	44	65,3	10,9	206	128	0,04	●
14 x 24	28	22	15	27	65	93,0	13,3	178	107	0,08	●
15 x 24	28	22	15	27	65	99,0	13,3	166	107	0,07	●
16 x 24	28	22	15	27	65	106	13,3	156	107	0,07	●
18 x 30	36	27	17	36	161	223	24,8	224	145	0,2	●
19 x 30	36	27	17	36	161	235	24,8	212	145	0,2	●
20 x 30	36	27	17	36	161	248	24,8	201	145	0,15	●
22 x 38	41	30	20	46	250	349	31,8	197	122	0,35	●
24 x 38	41	30	20	46	250	381	31,8	180	122	0,3	●
25 x 38	41	30	20	46	250	397	31,8	173	122	0,3	●
30 x 42	44	33	23	50	355	605	40,4	162	123	0,35	●
32 x 50	51	38	28	55	490	764	47,8	166	112	0,55	●
35 x 50	51	38	28	55	490	836	47,8	151	112	0,5	●

● Sizes of clamping elements available from stock.
1) These are the maximum screw tightening torques. They can be reduced by a maximum of 40 % of the figures specified above, with T, F_{ax}, P_W and P_N decreasing proportionally.

CLAMPEX® KTR 150
Clamping elements

Not self-centering clamping element with minimum dimensions





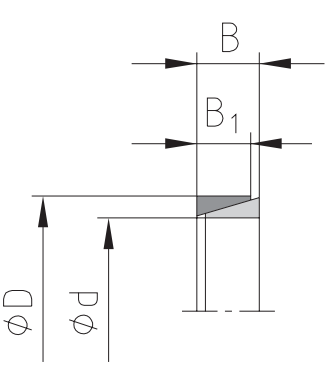

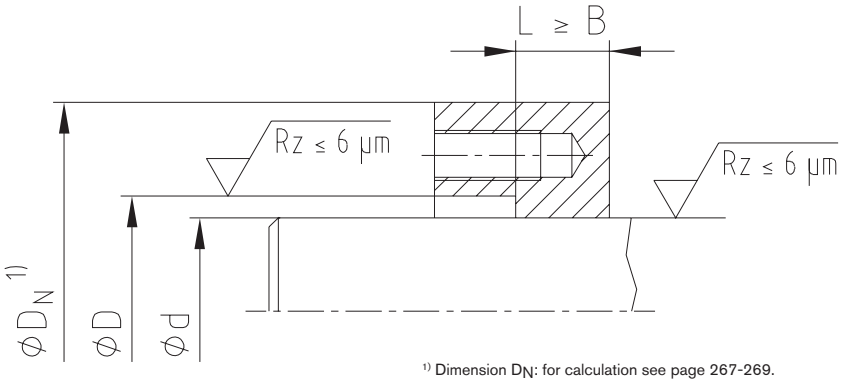

[1] Dimension D_N: for calculation see page 267-269.

Tolerances for d and D

d ≤ 38 mm = d **h6**/D **H7**

d > 38 mm = d **h8**/D **H8**

Example of application of hub type

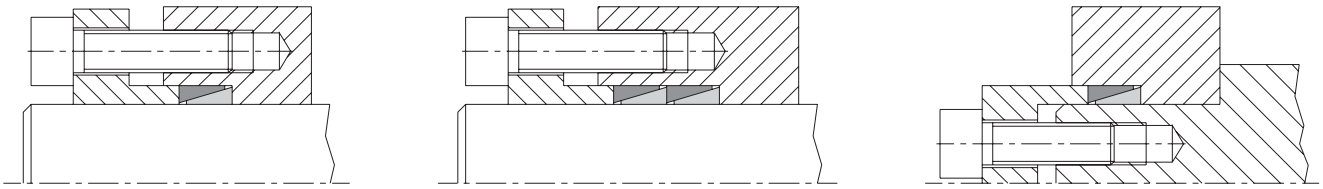

Up to four clamping elements can be installed in a series.

The torques rise as follows:

1 clamping element	$T = T_{catalogue} \times 1.00$
2 clamping elements	$T = T_{catalogue} \times 1.55$
3 clamping elements	$T = T_{catalogue} \times 1.85$
4 clamping elements	$T = T_{catalogue} \times 2.02$

Clamping flanges

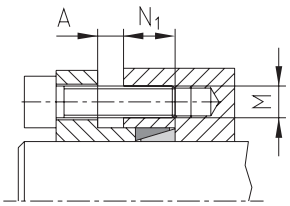

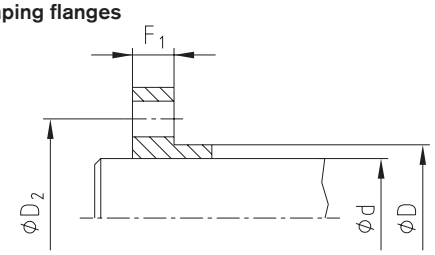

Dimensions of clamping flanges recommended:

N_1 [mm] ≥ 1,5 • B

D_2 [mm] = D + 12 +M

F_1 [mm] = M • 1.3 (with screws 8.8)

F_1 [mm] = M • 1.8 (with screws 10.9/12.9)

Ordering example:

KTR 150	60	x	68
Series	Size of internal diameter d		Size of external diameter D

CLAMPEX® – KTR 150

d x D [mm]	Dimensions [mm]		Distance dimension A [mm]				Clamping force required for clamping screws μ_{total}=0.14			Transmittable torque or axial force		Surface pressure between clamping element		Weight [~kg]	Stock programme
	B	B_1	Clamping elements				P_O [N]	P_S [N]	P_A = P_O + P_S [N]	T [Nm]	F_{ax} [kN]	Shaft P_W [N/mm²]	Hub P_N [N/mm²]		
			1	2	3	4									
6 x 9	4,5	3,7	3	3	3	4	0**	3	3	2	0,6	80	53	0,0015	●
7 x 10	4,5	3,7	3	3	3	4	0**	5	5	4	1	117	82	0,0014	●
8 x 11	4,5	3,7	3	3	3	4	0**	6	6	5	1	112	81	0,0015	●
9 x 12	4,5	3,7	3	3	3	4	8	8	16	8	1	142	106	0,0017	●
10 x 13	4,5	3,7	3	3	3	4	7	9	16	10	2	143	110	0,0018	●
12 x 15	4,5	3,7	3	3	3	4	7	8	15	11	1	110	88	0,0022	●
13 x 16	4,5	3,7	3	3	3	4	6	10	16	13	2	110	90	0,0023	●
14 x 18	6,3	5,3	3	4	4	5	11	15	26	22	3	112	87	0,0049	●
15 x 19	6,3	5,3	3	4	4	5	11	15	26	25	3	111	88	0,0053	●
16 x 20	6,3	5,3	3	4	4	5	10	15	25	26	3	102	81	0,0055	●
17 x 21	6,3	5,3	3	4	4	5	10	16	26	30	3	104	84	0,0058	●
18 x 22	6,3	5,3	3	4	4	5	9	17	26	33	3	102	83	0,0061	●
19 x 24	6,3	5,3	3	4	4	5	13	19	32	40	4	111	88	0,0078	●
20 x 25	6,3	5,3	3	4	4	5	12	20	32	44	4	110	88	0,0082	●
22 x 26	6,3	5,3	3	4	4	5	9	21	30	50	4	103	87	0,0072	●
24 x 28	6,3	5,3	3	4	4	5	8	26	34	68	5	118	101	0,0079	●
25 x 30	6,3	5,3	3	4	4	5	10	27	37	75	6	120	100	0,01	●
28 x 32	6,3	5,3	3	4	4	5	7	30	37	90	6	115	101	0,009	●
30 x 35	6,3	5,3	3	4	4	5	8	31	39	100	6	111	95	0,012	●
32 x 36	6,3	5,3	3	4	4	5	8	34	42	120	7	117	104	0,01	●
35 x 40	7	6,0	3	4	4	5	13	42	55	160	9	115	101	0,02	●
36 x 42	7	6,0	4	5	5	6	15	43	58	170	9	116	99	0,02	●
38 x 44	7	6,0	4	5	5	6	14	46	60	190	10	116	100	0,02	●
40 x 45	8	6,6	4	5	5	6	14	53	67	230	11	116	103	0,02	●
42 x 48	8	6,6	4	5	5	6	16	57	73	260	12	118	104	0,03	●
45 x 52	10	8,6	4	5	5	6	26	80	106	390	17	119	103	0,05	●
48 x 55	10	8,6	4	5	5	6	25	82	107	430	17	115	100	0,05	●
50 x 57	10	8,6	4	5	5	6	24	86	110	470	18	116	102	0,05	●
55 x 62	10	8,6	4	5	5	6	22	97	119	580	21	118	105	0,05	●
56 x 64	12	10,4	4	5	5	6	29	122	151	740	26	120	105	0,07	
60 x 68	12	10,4	4	5	6	7	27	129	156	840	28	119	105	0,07	●
63 x 71	12	10,4	4	5	6	7	26	134	160	920	29	118	105	0,08	●
65 x 73	12	10,4	4	5	6	7	25	142	167	1000	30	121	108	0,08	●
70 x 79	14	12,2	4	5	6	7	31	171	202	1300	37	115	102	0,11	●
71 x 80	14	12,2	4	5	6	7	31	181	212	1400	39	121	107	0,11	
75 x 84	14	12,2	4	5	6	7	34	184	218	1500	40	116	104	0,12	●
80 x 91	17	15,0	5	6	7	8	48	241	289	2100	52	116	102	0,12	●
85 x 96	17	15,0	5	6	7	8	45	260	305	2400	56	117	104	0,2	●
90 x 101	17	15,0	5	6	7	8	43	276	319	2700	60	118	105	0,2	●
95 x 106	17	15,0	5	6	8	9	41	290	331	3000	63	118	105	0,22	●
100 x 114	21	18,7	5	6	8	9	61	386	447	4200	84	119	105	0,4	●
110 x 124	21	18,7	5	6	8	9	65	393	458	4700	85	110	98	0,4	●
120 x 134	21	18,7	5	6	8	9	60	391	451	5100	85	100	90	0,5	●
130 x 148	28	25,3	6	7	9	11	96	573	669	8100	124	101	88	0,85	●
140 x 158	28	25,3	6	7	9	11	89	618	707	9400	134	101	89	0,91	●
150 x 168	28	25,3	6	7	9	11	84	674	758	11000	146	103	92	0,97	
160 x 178	28	25,3	6	7	9	11	79	833	912	14500	181	119	107	1,02	
170 x 191	33	30,0	7	8	10	12	118	1054	1172	19500	229	119	106	1,5	
180 x 201	33	30,0	7	8	10	12	112	1082	1194	21200	235	116	104	1,6	
190 x 211	33	30,0	7	9	10	12	106	1166	1272	24100	253	118	106	1,7	
200 x 224	38	34,5	7	9	11	13	133	1425	1558	31000	310	119	106	2,3	
210 x 234	38	34,5	7	9	11	13	127	1532	1659	35000	333	122	110	2,5	
220 x 244	38	34,5	7	9	11	13	122	1587	1709	38000	345	121	109	2,5	
230 x 257	43	39,5	7	9	12	14	165	1579	1744	39500	343	100	90	3,4	
240 x 267	43	39,5	7	9	12	14	158	1801	1959	47000	391	110	99	3,5	
250 x 280	48	44,0	8	10	13	16	188	1912	2100	52000	416	100	90	4,7	
260 x 290	48	44,0	8	10	13	16	181	1997	2178	56500	434	101	90	4,8	
270 x 300	48	44,0	8	10	13	16	174	2077	2251	61000	451	101	91	4,9	
280 x 313	53	49,0	9	11	14	17	205	2381	2586	72500	517	100	90	6,3	
290 x 323	53	49,0	9	11	14	17	221	2457	2678	77500	534	100	90	6,5	
300 x 333	53	49,0	9	11	14	17	214	2544	2758	83000	553	100	90	6,7	
320 x 360	65	59,0	10	15	20	25	291	3275	3566	114000	712	100	89	10,9	
340 x 380	65	59,0	10	15	20	25	275	3474	3749	128500	755	100	89	11,5	
360 x 400	65	59,0	10	15	20	25	261	3677	3938	144000	800	100	90	12,2	
380 x 420	65	59,0	10	15	20	25	269	3870	4139	160000	842	100	90	12,8	
400 x 440	65	59,0	10	15	20	25	256	4091	4347	178000	890	100	91	13,5	
420 x 460	65	59,0	10	15	20	25	244	4290	4534	196000	933	100	91	14,1	
440 x 480	65	59,0	10	15	20	25	234	4492	4726	215000	977	100	92	14,7	

● Sizes of clamping elements available from stock.
** Type with slot
Other sizes on request

P_A = Total force
P_O = Setting force
P_S = Clamping force

For continuously updated data please refer to our online catalogue at www.ktr.com

Self-centering clamping elements with a wide range of applications



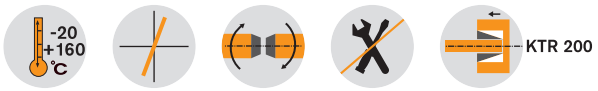

KTR 200

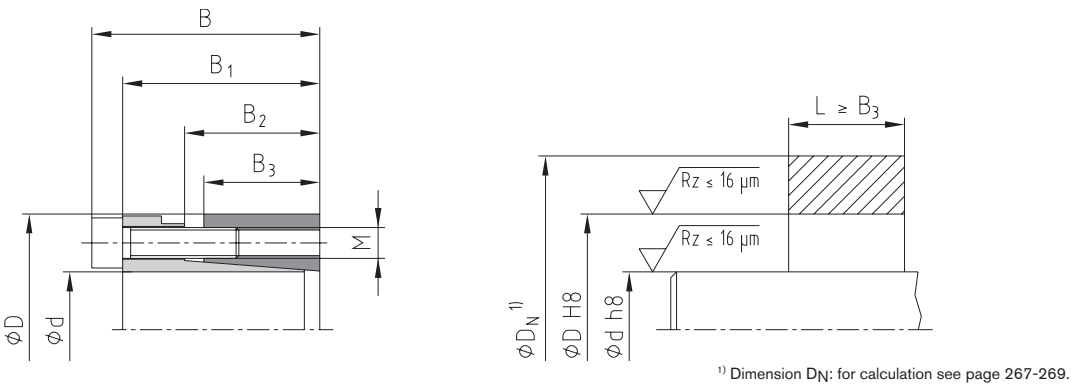

1) Dimension D_N: for calculation see page 267-269.

Example of application of hub type

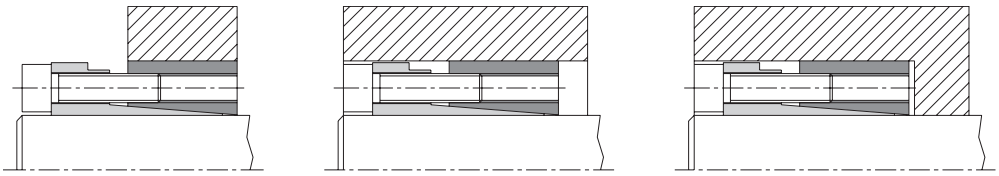

KTR 201

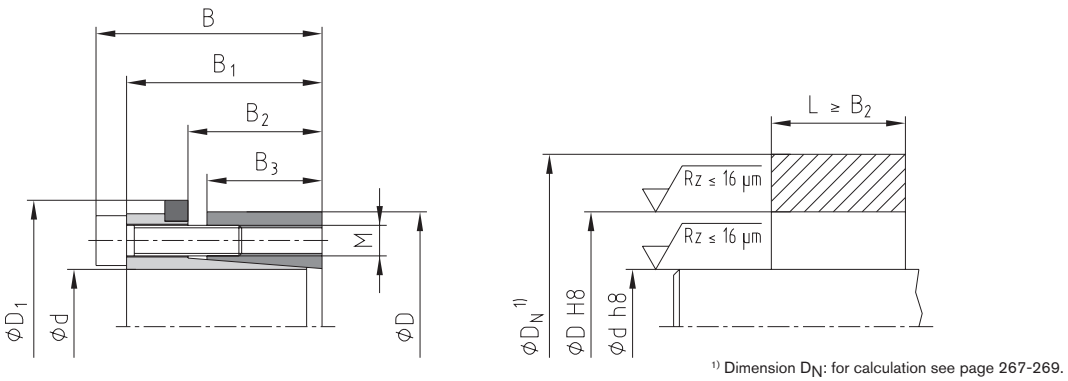

1) Dimension D_N: for calculation see page 267-269.

Example of application of hub type

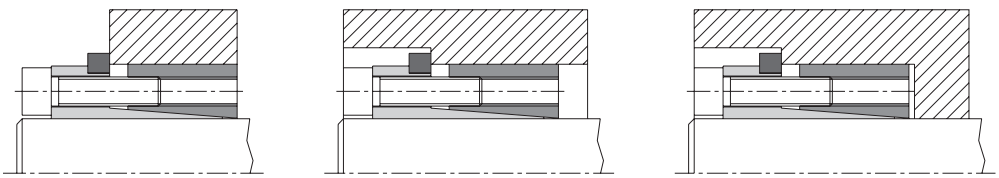

Ordering example:	KTR 200	40	x	65
	Series	Size of internal diameter d		Size of external diameter D

CLAMPEX® – KTR 200 and KTR 201

d x D [mm]	Dimensions [mm]					Clamping screws DIN EN ISO 4762 - 12.9 μ_{total}=0.14					KTR 200						KTR 201					
									T_A [Nm] [1]		Transmittable torque or axial force		Surface pressure between clamping element		Weight [~kg]	Stock programme	Transmittable torque or axial force		Surface pressure between clamping element		Weight [~kg]	Stock programme
	B	B_1	B_2	B_3	D_1	M	Length	z number	KTR 200	KTR 201	T [Nm]	F_{ax} [kN]	Shaft P_W [N/mm²]	Hub P_N [N/mm²]			T [Nm]	F_{ax} [kN]	Shaft P_W [N/mm²]	Hub P_N [N/mm²]		
20 x 47	48	42	31	26	53	M6	25	6	17	17	530	53	270	115	0,4	●	320	32	163	69	0,4	●
22 x 47	48	42	31	26	53	M6	25	6	17	17	580	53	245	114	0,4	●	360	33	152	71	0,4	●
24 x 50	48	42	31	26	56	M6	25	6	17	17	630	53	223	107	0,4	●	390	33	138	66	0,4	●
25 x 50	48	42	31	26	56	M6	25	6	17	17	660	53	215	108	0,4	●	400	32	131	65	0,4	●
28 x 55	48	42	31	26	61	M6	25	6	17	17	740	53	193	98	0,5	●	450	32	117	60	0,5	●
30 x 55	48	42	31	26	61	M6	25	6	17	17	790	53	179	98	0,5	●	490	33	111	61	0,5	●
32 x 60	48	42	31	26	66	M6	25	8	17	17	1150	72	229	122	0,6	●	690	43	137	73	0,6	●
35 x 60	48	42	31	26	66	M6	25	8	17	17	1300	74	217	126	0,5	●	750	43	125	73	0,5	●
38 x 65	48	42	31	26	71	M6	25	8	17	17	1300	68	184	107	0,6	●	820	43	116	68	0,6	●
40 x 65	48	42	31	26	71	M6	25	8	17	17	1400	70	179	110	0,6	●	860	43	110	67	0,6	●
42 x 75	59	51	35	30	81	M8	30	6	41	41	2000	95	200	112	1,0	●	1300	62	130	73	1,0	●
45 x 75	59	51	35	30	81	M8	30	6	41	41	2200	98	192	115	1,0	●	1400	62	122	73	1,0	●
48 x 80	59	51	35	30	86	M8	30	8	41	41	3200	133	246	147	1,1	●	1900	79	146	87	1,1	●
50 x 80	59	51	35	30	86	M8	30	8	41	41	3300	132	233	146	1,1	●	2000	80	141	88	1,1	●
55 x 85	59	51	35	30	91	M8	30	8	41	41	3600	131	210	136	1,2	●	2200	80	129	83	1,2	●
60 x 90	59	51	35	30	96	M8	30	8	41	41	3900	130	192	128	1,2	●	2400	80	118	79	1,2	●
65 x 95	59	51	35	30	101	M8	30	8	41	41	4300	132	180	123	1,3	●	2600	80	109	74	1,3	●
70 x 110	71	61	46	40	119	M10	30	8	83	83	7500	214	203	129	2,2	●	4600	131	125	79	2,3	●
75 x 115	71	61	46	40	124	M10	30	8	83	83	8000	213	189	123	2,3	●	5000	133	118	77	2,4	●
80 x 120	71	61	46	40	129	M10	30	8	83	83	8500	213	176	117	2,4	●	5200	130	108	72	2,6	●
85 x 125	71	61	46	40	134	M10	30	10	83	83	11400	268	209	142	2,6	●	7000	165	128	87	2,7	●
90 x 130	71	61	46	40	139	M10	30	10	83	83	12000	267	196	136	2,7	●	7400	164	121	84	2,8	●
95 x 135	71	61	46	40	144	M10	30	10	83	83	12600	265	185	130	2,8	●	7800	164	115	81	2,9	●
100 x 145	80	68	52	45	155	M12	35	8	145	145	15000	300	177	122	3,9	●	9800	196	116	80	4,1	●
110 x 155	80	68	52	45	165	M12	35	8	145	145	16500	300	161	114	4,2	●	10700	195	104	74	4,4	●
120 x 165	80	68	52	45	175	M12	35	10	145	145	22500	375	184	134	4,5	●	14600	243	120	87	4,7	●
130 x 180	80	68	52	45	188	M12	35	12	145	145	29000	446	202	146	5,5		19000	292	133	96	5,7	
140 x 190	90	76	58	50	199	M14	40	10	210	230	32000	457	173	128	6,6		23000	329	125	92	6,9	
150 x 200	90	76	58	50	209	M14	40	12	210	230	41000	547	193	145	6,9	●	30000	400	141	106	7,2	
160 x 210	90	76	58	50	219	M14	40	12	210	230	44000	550	182	139	7,4		32000	400	133	101	7,8	
170 x 225	90	76	58	50	234	M14	40	14	210	230	54500	641	200	151	8,6		39000	459	143	108	9,0	
180 x 235	90	76	58	50	244	M14	40	14	210	230	57500	639	188	144	9,1		41000	456	134	103	9,5	
NEW 190 x 250	90	76	58	50	259	M14	40	15	210	230	65000	684	191	145	10,6		46400	488	136	104	11,1	
NEW 200 x 260	90	76	58	50	269	M14	40	15	210	230	68000	680	180	139	11,2		48800	488	129	100	11,7	

● Sizes of clamping elements available from stock.

[1] These are the maximum screw tightening torques. They can be reduced by a maximum of 40 % of the figures specified above, with T, F_{ax}, P_W and P_N decreasing proportionally.

Self-centering clamping elements as a compact alternative to KTR 200/201

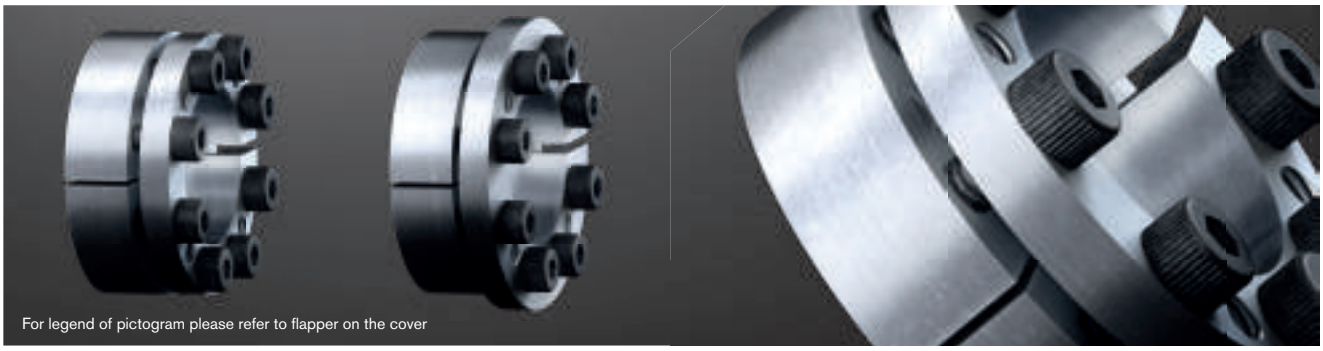

-20 +160 °C

KTR 203

KTR 203

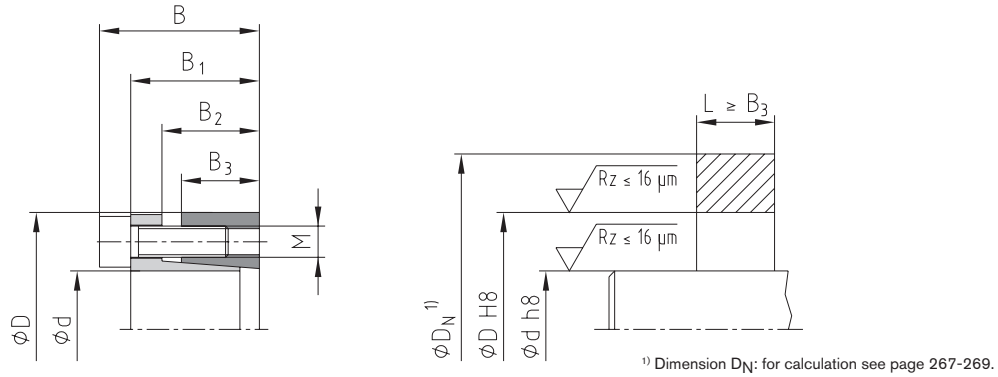

1) Dimension D_N: for calculation see page 267-269.

Example of application of hub type

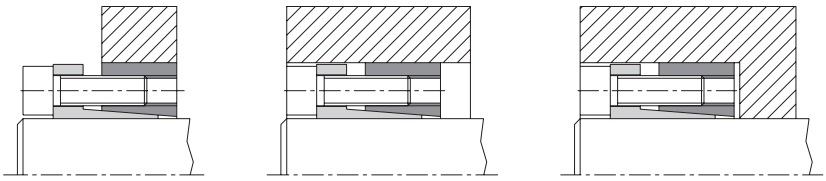

KTR 206

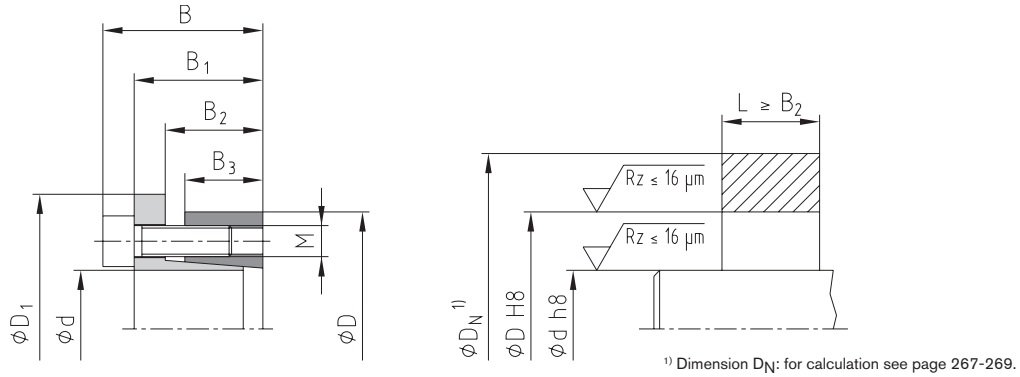

1) Dimension D_N: for calculation see page 267-269.

Example of application of hub type

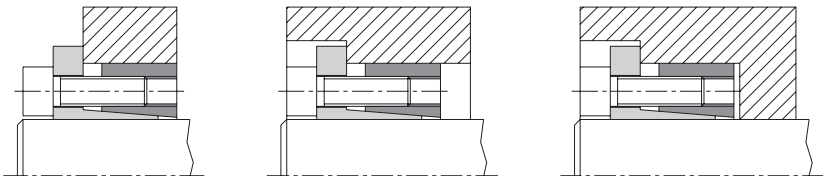

Ordering example:	KTR 203	40	x	65
	Series	Size of internal diameter d		Size of external diameter D

CLAMPEX® – KTR 203 and KTR 206

	d x D [mm]	Dimensions [mm]					Clamping screws DIN EN ISO 4762 - 12.9 μtotal=0.14					KTR 203						KTR 206					
												Transmittable torque or axial force		Surface pressure between clamping element				Transmittable torque or axial force		Surface pressure between clamping element			
		B	B_1	B_2	B_3	D_1	M	Length	z number	T_A [Nm] [1] KTR 203	T_A [Nm] [1] KTR 206	T [Nm]	F_{ax} [kN]	Shaft P_W [N/mm²]	Hub P_N [N/mm²]	Weight [~kg]	Stock programme	T [Nm]	F_{ax} [kN]	Shaft P_W [N/mm²]	Hub P_N [N/mm²]	Weight [~kg]	Stock programme
NEW	18 x 47	34	28	22	17	53	M6	20	6	14	17	370	41	356	136	0,3		290	32	279	107	0,3	
NEW	19 x 47	34	28	22	17	53	M6	20	6	14	17	390	41	337	136	0,3		300	32	259	105	0,3	
	20 x 47	34	28	22	17	53	M6	20	6	14	17	410	41	320	136	0,3	●	320	32	250	106	0,3	●
	22 x 47	34	28	22	17	53	M6	20	6	14	17	450	41	290	136	0,3	●	350	32	226	106	0,3	●
	24 x 50	34	28	22	17	56	M6	20	6	14	17	490	41	265	127	0,3	●	390	33	211	101	0,3	●
	25 x 50	34	28	22	17	56	M6	20	6	14	17	510	41	255	127	0,3	●	400	32	200	100	0,3	●
	28 x 55	34	28	22	17	61,4	M6	20	6	14	17	570	41	227	116	0,3	●	450	32	179	91	0,4	●
	30 x 55	34	28	22	17	61,4	M6	20	6	14	17	610	41	212	115	0,3	●	490	33	170	93	0,3	●
	32 x 60	34	28	22	17,5	67	M6	20	8	14	17	880	55	261	139	0,4	●	700	44	207	111	0,3	●
	35 x 60	34	28	22	17,5	67	M6	20	8	14	17	960	55	238	139	0,3	●	760	43	188	110	0,4	●
	38 x 65	34	28	22	17,5	72	M6	20	8	14	17	1000	53	210	123	0,4	●	820	43	172	101	0,5	●
	40 x 65	34	28	22	17,5	72	M6	20	8	14	17	1100	55	208	128	0,4	●	870	44	165	101	0,4	●
	42 x 75	41	33	25	20	84	M8	25	8	35	41	2200	105	331	185	0,6	●	1700	81	256	143	0,7	●
	45 x 75	41	33	25	20	84	M8	25	8	35	41	2400	107	314	189	0,6	●	1800	80	236	141	0,7	●
	48 x 80	41	33,5	24	20	89	M8	25	8	35	41	2500	104	288	173	0,7		1900	79	219	131	0,8	●
	50 x 80	41	33,5	24	20	89	M8	25	8	35	41	2600	104	276	172	0,7	●	2000	80	212	133	0,8	●
	55 x 85	41	33,5	24	20	94	M8	25	8	35	41	2900	105	254	165	0,7	●	2200	80	193	125	0,9	●
	60 x 90	41	33,5	24	20	99	M8	25	8	35	41	3100	103	228	152	0,8	●	2400	80	177	118	0,9	●
	65 x 95	41	33,5	24	20	104	M8	25	8	35	41	3400	105	213	146	0,8	●	2600	80	163	112	0,9	●
	70 x 110	50	40	29	24	119	M10	30	8	70	83	6000	171	271	172	1,5	●	4600	131	208	132	1,6	●
	75 x 115	50	40	29	24	124	M10	30	8	70	83	6400	171	252	164	1,6	●	5000	133	196	128	1,7	●
	80 x 120	50	40	29	24	129	M10	30	8	70	83	6800	170	235	157	1,7	●	5300	133	183	122	1,9	●
	85 x 125	50	40	29	24	134	M10	30	10	70	83	9000	212	275	187	1,8	●	7000	165	214	146	2,0	●
	90 x 130	50	40	29	24	139	M10	30	10	70	83	9600	213	262	181	1,9	●	7400	164	202	140	2,0	●
	95 x 135	50	40	29	24	144	M10	30	10	70	83	10200	215	250	176	2,0		7800	164	191	134	2,3	
	100 x 145	56	44	31	25,5	154	M12	30	8	115	145	12000	240	250	172	2,6	●	9700	194	202	139	2,8	●
	110 x 155	56	44	31	25,5	164	M12	30	8	115	145	13000	236	224	159	2,8		10700	195	184	131	3,1	●
	120 x 165	56	44	31	26	174	M12	30	9	115	145	16000	267	227	165	3,6		13100	218	186	135	3,2	●
	130 x 180	64	52	39	34	189	M12	30	12	115	145	23000	354	212	153	4,4		19000	292	175	127	4,6	●
	140 x 190	68	54	39	34	199	M14	40	9	185	230	25000	357	199	147	4,9		20500	293	163	120	5,0	
	150 x 200	68	54	39	34	209	M14	40	10	185	230	30000	400	208	156	5,2		24500	327	170	127	5,2	
	160 x 210	68	54	39	34	219	M14	40	12	185	230	38800	485	236	180	5,6		31300	391	191	145	5,6	
	170 x 225	78	64	49	44	234	M14	40	12	185	230	41300	486	172	130	6,9		33200	391	139	105	6,5	
	180 x 235	78	64	49	44	244	M14	40	12	185	230	43700	486	163	125	8,5		35000	389	130	100	8,5	
	190 x 250	78	64	49	43,5	259	M14	40	15	185	230	57700	607	195	148	9,0		46500	489	157	119	9,0	
	200 x 260	78	64	49	43,5	269	M14	40	15	185	230	60700	607	185	142	9,6		49000	490	149	115	9,6	
	220 x 285	88	72	57	50	294	M16	40	12	290	360	77300	703	169	131	13,4		57100	519	125	97	14,0	
	240 x 305	88	72	57	50	314	M16	40	15	290	360	105400	878	194	153	14,5		77800	648	143	113	15,1	
	260 x 325	88	72	57	50	334	M16	40	18	290	360	137000	1054	215	172	16,1		101200	778	159	127	16,2	
	280 x 355	102	84	66	60	364	M18	50	16	400	480	160300	1145	181	143	23,4		113300	809	128	101	25,6	
	300 x 375	102	84	66	60	384	M18	50	18	400	480	193200	1288	190	152	25,3		136500	910	134	107	25,5	
	320 x 405	121	101	81	74	414	M20	50	18	580	690	269300	1683	189	149	36,9		191000	1194	134	106	37,9	
NEW	340 x 425	121	101	81	74	434	M20	50	21	580	690	333800	1964	207	166	39,0		237000	1394	147	118	38,3	
NEW	360 x 455	138	116	93	86	464	M22	60	18	780	930	375700	2087	179	141	54,0		264000	1467	126	99	53,3	
NEW	380 x 475	138	116	93	86	484	M22	60	21	780	930	462700	2435	198	158	56,2		325000	1711	139	111	57,6	
NEW	400 x 495	138	116	93	86	504	M22	60	21	780	930	487000	2435	188	152	58,9		342000	1710	132	107	60,3	

● Sizes of clamping elements available from stock.

[1] These are the maximum screw tightening torques. They can be reduced by a maximum of 40 % of the figures specified above with T, F_{ax}, P_W and P_N decreasing proportionally.

Self-centering, combination of a hub Ø with various shaft Ø





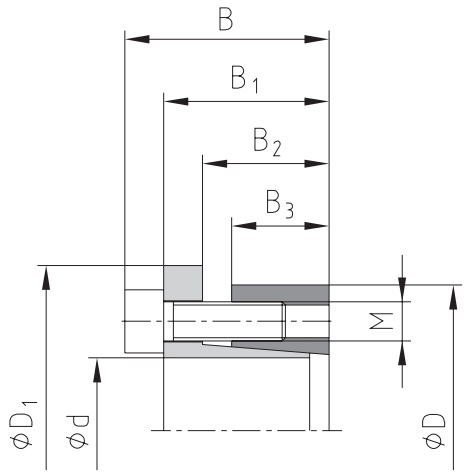

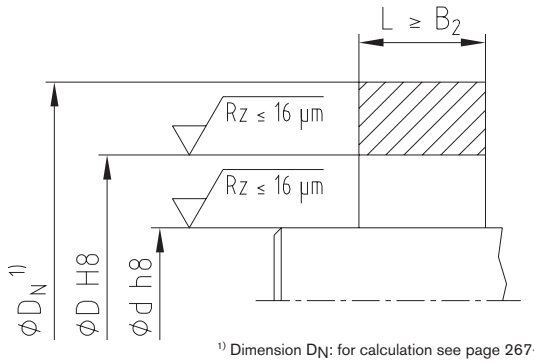

1) Dimension D_N: for calculation see page 267-269.

Example of application of hub type

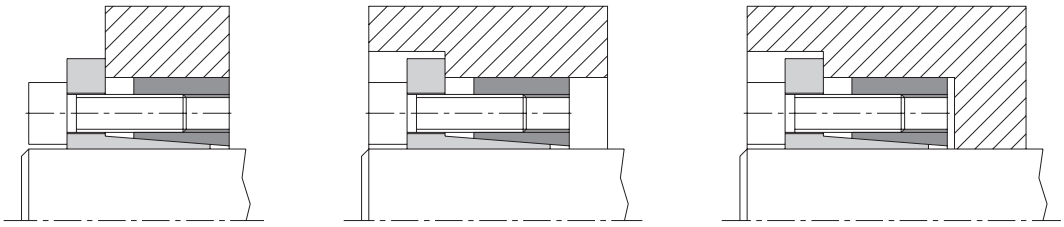

To fasten one size of hub on different shaft diameters

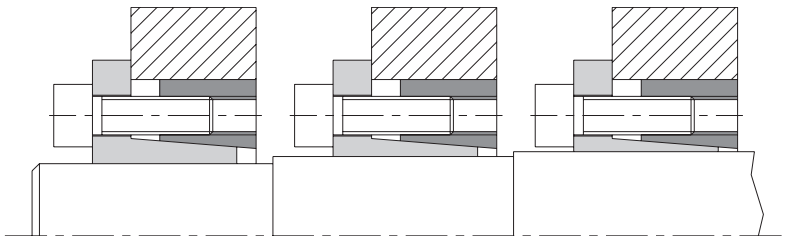

Ordering example:	KTR 225	28	x	65
	Series	Size of internal diameter d		Size of external diameter D

CLAMPEX® – KTR 225

d x D [mm]	Dimensions [mm]					Clamping screws DIN EN ISO 4762 - 12.9 µtotal=0.14				Transmittable torque or axial force		Surface pressure between clamping element		Weight [~kg]	Stock programme
	B	B_1	B_2	B_3	D_1	M	Length	Number z	T_A [1] [Nm]	T [Nm]	F_{ax} [kN]	Shaft PW [N/mm²]	Hub PN [N/mm²]		
14 x 55	38	30	22	17	62	M8	25	4	41	287	41	457	116	0,5	
16 x 55	38	30	22	17	62	M8	25	4	41	329	41	401	117	0,5	●
18 x 55	38	30	22	17	62	M8	25	4	41	370	41	356	117	0,5	●
19 x 55	38	30	22	17	62	M8	25	4	41	390	41	337	116	0,5	●
20 x 55	38	30	22	17	62	M8	25	4	41	410	41	320	116	0,5	●
22 x 55	38	30	22	17	62	M8	25	4	41	451	41	291	116	0,5	●
24 x 55	38	30	22	17	62	M8	25	4	41	492	41	267	116	0,4	●
25 x 55	38	30	22	17	62	M8	25	4	41	513	41	256	116	0,4	●
28 x 55	38	30	22	17	62	M8	25	4	41	575	41	229	117	0,4	●
30 x 55	38	30	22	17	62	M8	25	4	41	616	41	214	117	0,4	●
24 x 65	38	30	22	17	72	M8	25	5	41	616	51	334	123	0,7	●
25 x 65	38	30	22	17	72	M8	25	5	41	641	51	320	123	0,7	●
28 x 65	38	30	22	17	72	M8	25	5	41	718	51	286	123	0,6	●
30 x 65	38	30	22	17	72	M8	25	5	41	770	51	267	123	0,6	●
32 x 65	38	30	22	17	72	M8	25	5	41	821	51	250	123	0,6	●
35 x 65	38	30	22	17	72	M8	25	5	41	898	51	229	123	0,5	●
38 x 65	38	30	22	17	72	M8	25	5	41	975	51	211	123	0,5	●
40 x 65	38	30	22	17	72	M8	25	5	41	1026	51	200	123	0,5	●
30 x 80	41	33	25	20	88	M8	25	7	41	1077	72	317	119	1,1	
32 x 80	41	33	25	20	88	M8	25	7	41	1150	72	298	119	1,1	
35 x 80	41	33	25	20	88	M8	25	7	41	1257	72	272	119	1,0	
38 x 80	41	33	25	20	88	M8	25	7	41	1364	72	251	119	1,0	
40 x 80	41	33	25	20	88	M8	25	7	41	1436	72	238	119	0,9	●
42 x 80	41	33	25	20	88	M8	25	7	41	1509	72	227	119	0,9	
45 x 80	41	33	25	20	88	M8	25	7	41	1616	72	212	119	0,9	
48 x 80	41	33	25	20	88	M8	25	7	41	1723	72	198	119	0,8	
50 x 80	41	33	25	20	88	M8	25	7	41	1796	72	191	119	0,8	●

● Sizes of clamping elements available from stock.

[1] These are the maximum screw tightening torques. They can be reduced by a maximum of 40 % of the figures specified above, with T, F_{ax}, P_W and P_N being reduced proportionally.

Self-centering clamping element particularly suitable for thin-walled hubs





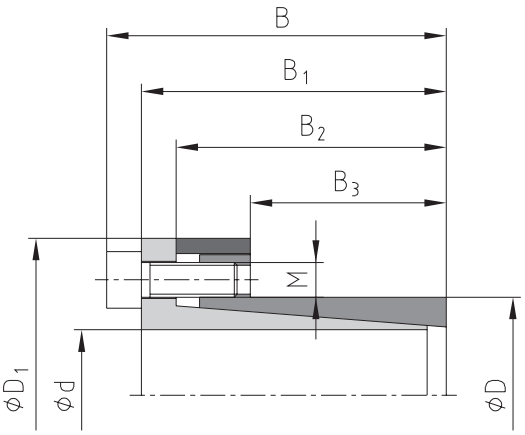

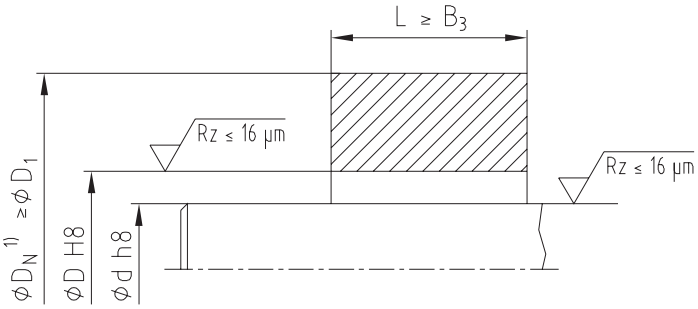

1) Dimension D_N: for calculation see page 267-269.

Example of application of hub type

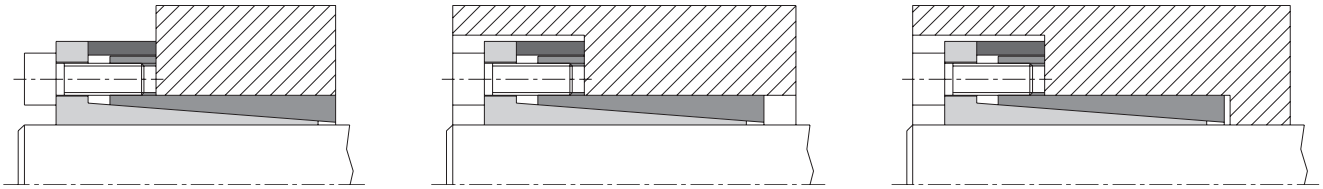

Ordering example:	KTR 250	28	x	39
	Series	Size of internal diameter d		Size of external diameter D

CLAMPEX® – KTR 250

d x D [mm]	Dimensions [mm]					Clamping screws DIN EN ISO 4762 - 12.9 µtotal=0.14				Transmittable torque or axial force		Surface pressure between clamping element		Weight [~kg]	Stock programme
	B	B_1	B_2	B_3	D_1	M	Length	z No. z	T_A [Nm] [1]	T [Nm]	F_{ax} [kN]	Shaft PW [N/mm²]	Hub PN [N/mm²]		
6 x 14	24,5	21,5	18,5	10	25	M3	10	4	2,6	11	4	162	69	0,05	●
8 x 15	29	25	21,5	11,5	27	M4	10	3	5,6	26	7	187	100	0,05	●
9 x 16	30	26	22,5	14	28	M4	10	4	5,6	37	8	173	97	0,06	●
10 x 16	30	26	22,5	14	29	M4	10	4	5,6	42	8	159	99	0,16	●
11 x 18	30	26	22,5	13,5	32	M4	10	4	5,6	50	9	162	99	0,18	●
12 x 18	30	26	22,5	13,5	32	M4	10	4	5,6	55	9	150	100	0,18	●
14 x 23	30	26	22,5	14	38	M4	10	6	5,6	100	14	193	118	0,20	●
15 x 24	42	36	28,5	16	44	M6	18	4	15	145	19	214	134	0,2	●
16 x 24	42	36	28,5	16	44	M6	18	4	15	155	19	201	134	0,3	●
NEW 17 x 25	42	36	28,5	16	45	M6	18	4	15	162	19	186	126	0,2	
NEW 17 x 26	44	38	31	18	47	M6	18	4	17	180	21	184	120	0,2	
18 x 26	44	38	31	18	47	M6	18	4	17	200	22	182	126	0,2	●
19 x 27	44	38	31	18	48	M6	18	4	17	210	22	171	121	0,3	●
20 x 28	44	38	31	18	49	M6	18	4	17	220	22	162	116	0,2	●
22 x 32	51	45	38	25	54	M6	18	4	17	250	23	110	75	0,3	●
24 x 34	51	45	38	25	56	M6	18	4	17	270	23	99	70	0,3	●
25 x 34	51	45	38	25	56	M6	18	4	17	280	22	95	70	0,3	●
28 x 39	51	45	38	25	61	M6	18	6	17	480	34	130	93	0,4	●
30 x 41	51	45	38	25	62	M6	18	6	17	510	34	120	88	0,4	●
32 x 43	51	45	38	25	65	M6	18	8	17	730	46	151	113	0,5	●
35 x 47	56	50	43	30	69	M6	18	8	17	800	46	115	86	0,5	●
38 x 50	56	50	43	30	72	M6	18	8	17	860	45	105	80	0,6	●
40 x 53	56	50	43	30	75	M6	18	8	17	900	45	99	75	0,6	●
42 x 55	65	57	49	32	78	M8	22	8	41	1800	86	169	129	0,9	●
45 x 59	73	65	57	40	85	M8	22	8	41	1900	84	124	95	1,0	●
48 x 62	78	70	62	45	87	M8	22	8	41	2000	83	102	79	1,0	●
50 x 65	78	70	62	45	92	M8	22	10	41	2600	104	123	94	1,3	●
55 x 71	83	75	67	50	98	M8	22	10	41	2900	105	102	79	1,5	●
60 x 77	83	75	67	50	104	M8	22	10	41	3100	103	91	71	1,7	●
65 x 84	83	75	67	50	111	M8	22	10	41	3400	105	85	66	1,9	●
70 x 90	101	91	80	60	119	M10	25	10	83	5800	166	105	81	2,9	●
75 x 95	101	91	80	60	126	M10	25	10	83	6200	165	97	77	2,3	●
80 x 100	106	96	85	65	131	M10	25	12	83	8000	200	102	82	3,3	●
85 x 106	106	96	85	65	137	M10	25	12	83	8500	200	96	77	3,6	●
90 x 112	106	96	85	65	143	M10	25	15	83	11200	249	113	91	3,9	●
95 x 120	106	96	85	65	153	M10	25	15	83	11800	248	107	84	4,5	
100 x 125	114	102	89	65	162	M12	30	12	145	14600	292	119	95	5,5	●
110 x 140	140	128	114	90	180	M12	30	12	145	16000	291	78	61	8,0	●
120 x 155	140	128	114	90	198	M12	30	12	145	17400	290	71	55	10,5	
130 x 165	140	128	114	90	208	M12	30	16	145	25000	385	87	69	11,9	

● Sizes of clamping elements available from stock.

[1] These are the maximum screw tightening torques. They can be reduced by a maximum of 40 % of the figures specified above, with T, F_{ax}, P_W and P_N decreasing proportionally.

CLAMPEX® KTR 400
Clamping elements

Self-centering clamping element with the highest transmission performance

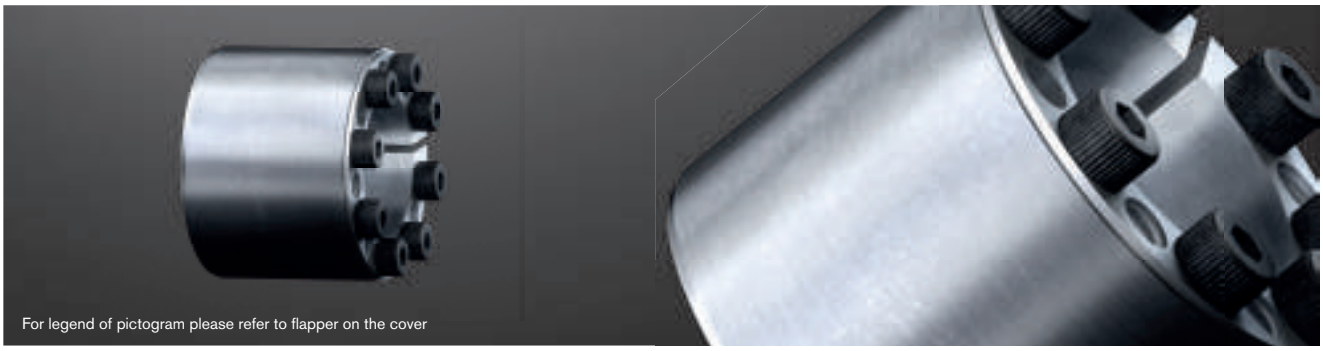

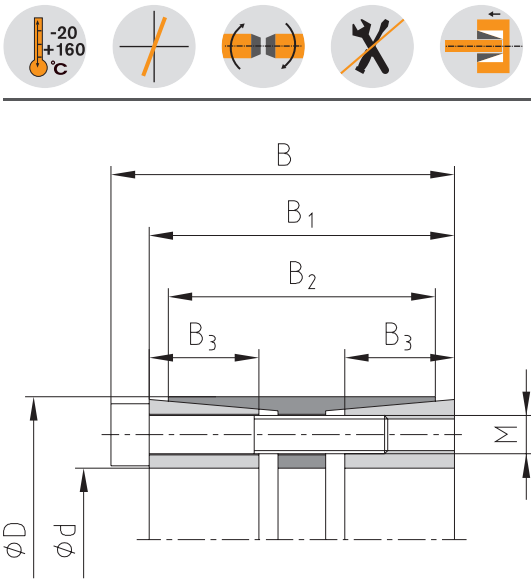

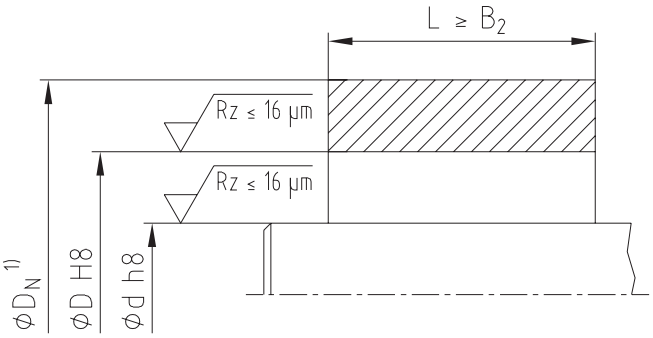

[1] Dimension D_N: for calculation see page 267-269.

Example of application of hub type

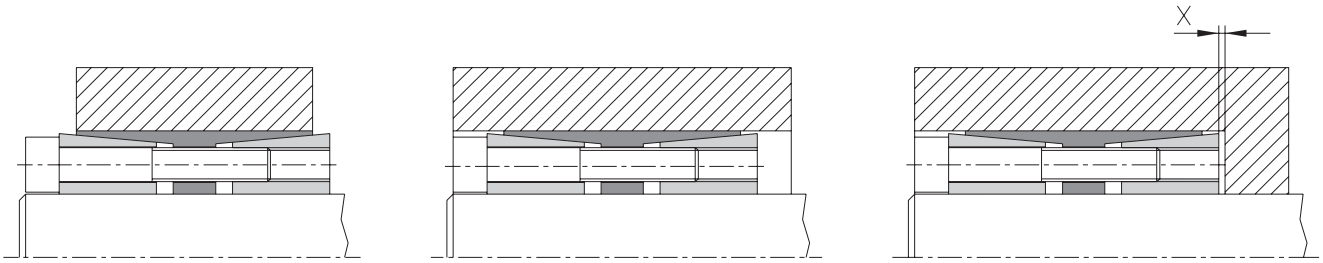

Formula to calculate space x left for disassembly:

$$x = \frac{B_1 - B_2}{2}$$

Ordering example:	KTR 400	100	x	145
	Series	Size of internal diameter d		Size of external diameter D

CLAMPEX® – KTR 400

d x D [1] [mm]	Dimensions [mm]				Standard applications in industry: Clamping screws DIN EN ISO 4762 - 12.9 μtotal=0.14				Transmittable torque or axial force		Surface pressure between clamping element		Applications with components subject to torsion and bending load: Clamping screws DIN EN ISO 4762 - 12.9 μtotal=0.14				Transmittable torque or axial force		Transmittable bending moment Mbperm. [Nm]	Surface pressure between clamping element		Weight [~kg]	Stock programme
	B	B_1	B_2	B_3	M	Number z	Length	T_A [2] [Nm]	T [Nm]	F_{ax} [kN]	Shaft PW [N/mm²]	Hub PN [N/mm²]	M	Number z	Length	T_A [Nm]	T [Nm]	F_{ax} [kN]		Shaft PW [N/mm²]	Hub PN [N/mm²]		
24 x 50	51	45	41	16	M6	6	35	17	700	58	202	92	M6	6	35	14	460	38	420	230	93	0,5	●
25 x 50	51	45	41	16	M6	6	35	17	730	58	194	92	M6	6	35	14	470	38	430	222	94	0,5	●
28 x 55	51	45	41	16	M6	8	35	17	1100	79	233	112	M6	8	35	14	740	53	490	257	110	0,5	●
30 x 55	51	45	41	16	M6	8	35	17	1180	79	217	112	M6	8	35	14	790	53	520	243	112	0,5	●
32 x 60	51	45	41	16	M6	8	35	17	1270	79	206	103	M6	8	35	14	830	52	560	230	104	0,8	●
35 x 60	51	45	41	16	M6	8	35	17	1390	79	188	104	M6	8	35	14	890	51	610	214	106	0,7	●
38 x 65	51	45	41	16	M6	10	35	17	1880	99	216	119	M6	10	35	14	1250	66	660	240	119	1,1	●
40 x 65	51	45	41	16	M6	10	35	17	1980	99	205	119	M6	10	35	14	1300	65	700	230	120	1,1	●
NEW 40 x 75	51	45	41	16	M8	8	35	41	2850	143	296	149	M8	8	35	35	2030	102	700	320	142	1,1	●
42 x 75	51	45	41	16	M8	8	35	41	3000	143	282	149	M8	8	35	35	2120	101	730	307	142	1,2	●
45 x 75	51	45	41	16	M8	8	35	41	3250	144	266	151	M8	8	35	35	2260	100	780	289	145	1,1	●
48 x 80	70	62	58	23	M8	8	55	41	3450	144	173	98	M8	8	55	35	2160	90	1700	202	101	1,5	●
50 x 80	70	62	58	23	M8	8	55	41	3600	144	166	98	M8	8	55	35	2220	89	1770	196	102	1,4	●
55 x 85	70	62	58	23	M8	8	55	41	3950	144	151	92	M8	8	55	35	2350	85	1950	182	98	1,5	●
60 x 90	70	62	58	23	M8	10	55	41	5400	180	173	109	M8	10	55	35	3380	113	2130	202	113	1,6	●
65 x 95	70	62	58	23	M8	10	55	41	5850	180	160	103	M8	10	55	35	3560	110	2310	190	109	1,7	●
70 x 110	86	76	70	28	M10	10	60	83	10200	291	197	118	M10	10	60	69	6620	189	3650	222	120	3,1	●
75 x 115	86	76	70	28	M10	10	60	83	10950	292	184	113	M10	10	60	69	6970	186	3920	210	117	3,3	●
80 x 120	86	76	70	28	M10	12	60	83	14000	350	207	130	M10	12	60	69	9210	230	4180	231	131	3,5	●
85 x 125	86	76	70	28	M10	12	60	83	15000	353	197	126	M10	12	60	69	9710	228	4440	220	129	3,6	●
90 x 130	86	76	70	28	M10	12	60	83	15800	351	185	121	M10	12	60	69	10000	222	4700	210	124	3,8	●
95 x 135	86	76	70	28	M10	12	60	83	16800	354	176	117	M10	12	60	69	10500	221	4960	201	122	4,0	●
100 x 145	110	98	92	35	M12	12	80	145	26000	520	197	121	M12	12	80	120	16850	337	8580	219	124	6,1	●
110 x 155	110	98	92	35	M12	12	80	145	28600	520	179	114	M12	12	80	120	18000	327	9440	203	118	6,6	●
120 x 165	110	98	92	35	M12	14	80	145	36300	605	191	124	M12	14	80	120	23350	389	10300	214	128	7,1	●
130 x 180	128	114	108	41	M14	12	90	230	46000	708	176	114	M14	12	90	190	29950	461	15300	201	119	10,0	●
140 x 190	128	114	108	41	M14	14	90	230	57800	826	191	126	M14	14	90	190	37200	531	16500	214	129	10,6	●
150 x 200	128	114	108	41	M14	16	90	230	70800	944	204	136	M14	16	90	190	46400	619	17700	226	139	11,2	●
160 x 210	128	114	108	41	M14	16	90	230	75500	944	191	130	M14	16	90	190	48600	608	18800	214	133	11,9	●
170 x 225	162	146	136	52	M16	14	110	355	95900	1128	169	114	M16	14	110	295	59100	695	32000	196	119	17,6	●
180 x 235	162	146	136	52	M16	15	110	355	108800	1209	171	117	M16	15	110	295	67500	750	33900	198	122	18,5	●
190 x 250	162	146	136	52	M16	16	110	355	122500	1289	173	117	M16	16	110	295	76100	801	35800	199	122	21,4	●
200 x 260	162	146	136	52	M16	16	110	355	128900	1289	164	113	M16	16	110	295	78600	786	37700	192	118	22,4	●
220 x 285	162	146	136	52	M16	18	110	355	171800	1562	181	120	M16	18	110	295	105000	955	41400	195	126	26,6	●
240 x 305	162	146	136	52	M16	20	110	355	208000	1733	184	125	M16	20	110	295	128000	1067	45200	198	130	28,7	●
260 x 325	166	150	134	55	M16	21	110	355	237000	1823	169	117	M16	21	110	295	142000	1092	51000	187	123	31,2	
280 x 355	197	177	165	66	M20	18	130	690	340000	2429	174	119	M20	18	130	580	208000	1486	81300	192	125	46,8	
300 x 375	197	177	165	66	M20	20	130	690	405000	2700	181	125	M20	20	130	580	252000	1680	87100	198	130	69,7	
320 x 405	197	177	165	66	M20	21	130	690	453000	2831	178	121	M20	21	130	580	280000	1750	92900	196	127	60,5	
340 x 425	197	177	165	66	M20	22	130	690	504900	2970	176	121	M20	22	130	580	311000	1829	98700	193	127	63,9	
360 x 455	224	203	190	76	M22	21	150	930	626000	3478	169	115	M22	21	150	780	381000	2117	138500	189	121	86,8	
380 x 475	224	203	190	76	M22	22	150	930	692000	3642	167	115	M22	22	150	780	420000	2211	146000	188	122	91,0	
400 x 495	224	203	190	76	M22	24	150	930	795000	3975	173	121	M22	24	150	780	489000	2445	154000	194	127	95,3	
420 x 515	224	203	190	76	M22	24	150	930	835000	3976	165	116	M22	24	150	780	505000	2405	161500	186	123	100	
440 x 535	224	203	190	76	M22	24	150	930	875000	3977	158	112	M22	24	150	780	517000	2350	169000	178	120	105	
460 x 555	224	203	190	76	M22	24	150	930	914000	3974	151	108	M22	24	150	780	530000	2304	177000	172	117	109	
480 x 575	224	203	190	76	M22	28	150	930	1113000	4638	169	121	M22	28	150	780	678000	2825	184500	189	128	114	
500 x 595	224	203	190	76	M22	28	150	930	1160000	4640	162	117	M22	28	150	780	692000	2768	192000	182	125	119	
520 x 615	224	203	190	76	M22	30	150	930	1292000	4969	167	122	M22	30	150	780	780000	3000	200000	186	129	122,5	
540 x 635	224	203	190	76	M22	30	150	930	1342000	4970	161	118	M22	30	150	780	799000	2959	207500	180	126	128	
560 x 655	224	203	190	76	M22	32	150	930	1484000	5300	165	122	M22	32	150	780	893000	3189	215500	184	129	131	
580 x 675	224	203	190	76	M22	32	150	930	1537000	5300	159	118	M22	32	150	780	912000	3145	223000	179	127	136	
600 x 695	224	203	190	76	M22	33	150	930	1640000	5467	159	118	M22	33	150	780	972000	3240	231000	179	127	139	

● Sizes of clamping elements available from stock.

[1] External ring from size 400 x 495 without slot.

[2] These are the maximum screw tightening torques. They can be reduced by a maxium of 40 % of the figures specified above, with T, F_{ax}, P_W and P_N decreasing proportionally.

Three-part external clamping set for applications on hollow shafts





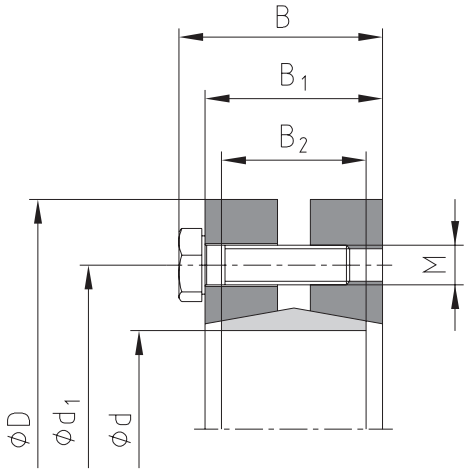

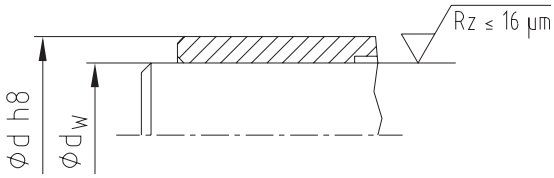

Tolerances for d_W

For d_W from 10 to 30 mm	**H6 / j6**
For d_W from 31 to 50 mm	**H6 / h6**
For d_W from 51 to 80 mm	**H6 / g6**
For d_W from 81 to 500 mm	**H7 / g6**

Bigger tolerances are generally available! Please contact us!

Example of application of hub type

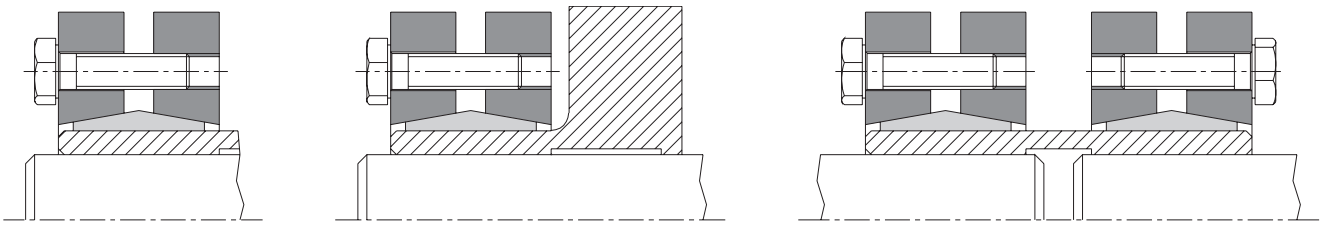

Ordering example:	KTR 603	44	x	80
	Series	Size of internal diameter d		Size of external diameter D

CLAMPEX® – KTR 603

d x D [mm]	Shaft diameter dw [mm]	Transmittable torque or axial force		Dimensions [mm]				Clamping screws DIN EN ISO 4014 - 10.9 µtotal=0.10				Surface pressure of clamping element/hollow shaft	Weight [~kg]	Stock programme
		T [Nm]	F_{ax} [kN]	B	B_1	B_2	d_1	M	Length	Number z	T_A [Nm]	P_H [N/mm²]		
	10	28	6											
14 x 38	11	38	7	14,5	11	9	24	M5	10	4	3,5	388	0,1	●
	12	50	8											
	12	50	8											
16 x 41	13	70	11	18,5	15	11	26	M5	14	5	4	310	0,2	●
	14	90	13											
	19	180	19											
24 x 50	20	210	21	22,5	19	14	36	M5	18	6	5	286	0,2	●
	21	250	24											
	24	310	26											
30 x 60	25	340	27	24,5	21	16	44	M5	18	6	6	233	0,3	●
	26	380	29											
	28	460	33											
36 x 72	30	590	39	27	23	18	52	M6	20	5	12	307	0,4	●
	31	630	41											
	32	630	39											
44 x 80	35	780	45	29	25	20	61	M6	22	7	12	317	0,6	●
	36	860	48											
	38	940	49											
50 x 90	40	1100	55	31	27	22	70	M6	22	8	12	289	0,8	●
	42	1300	62											
	42	1200	57											
55 x 100	45	1500	67	34	30	23	75	M6	25	8	12	252	1,1	●
	48	1900	79											
	48	1800	75											
62 x 110	50	2200	88	34	30	23	86	M6	25	10	12	279	1,3	●
	52	2400	92											
	50	2000	80											
68 x 115	55	2500	91	34	30	23	86	M6	25	10	12	255	1,4	●
	60	3100	103											
	55	2500	91											
75 x 138	60	3200	107	37,5	32	25	100	M8	30	7	30	273	1,8	●
	65	3900	120											
	60	3200	107											
80 x 145	65	3900	120	37,5	32	25	100	M8	30	7	30	256	2,6	●
	70	4600	131											
	65	4800	148											
85 x 155	70	6100	174	44,5	39	30	114	M8	35	10	30	285	3,9	
	75	7400	197											
	65	4700	145											
90 x 155	70	6000	171	44,5	39	30	114	M8	35	10	30	217	3,8	●
	75	7200	192											
	70	6900	197											
100 x 170	75	7500	200	49,5	44	34	124	M8	35	12	30	227	4,7	●
	80	9000	225											
	75	7200	192											
110 x 185	80	9000	225	56,5	50	39	136	M10	40	9	59	215	6,0	●
	85	11000	259											
	80	8500	213											
115 x 188	85	10000	235	56,5	50	39	141	M10	40	9	59	209	5,0	
	90	12000	267											
	80	10500	263											
120 x 215	85	13200	311	58,5	52	42	160	M10	40	12	59	271	5,9	
	90	14400	320											
	85	11000	259											
125 x 215	90	13000	289	58,5	52	42	160	M10	40	12	59	222	8,5	●
	95	15000	316											
	90	13700	304											
130 x 215	95	15800	333	58,5	52	42	160	M10	40	12	59	227	9,0	
	100	18200	364											
	95	15000	316											
140 x 230	100	17000	340	67,5	60	46	175	M12	45	10	100	209	11	
	105	20000	381											

● Sizes of clamping elements available from stock.
Other sizes on request.

Three-part external clamping set for applications on hollow shafts

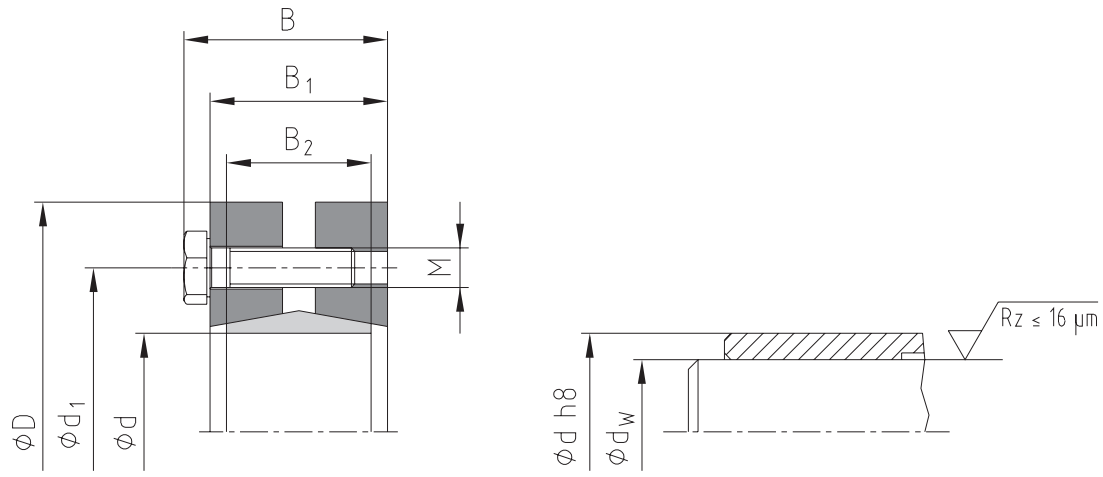

CLAMPEX® – KTR 603

	d x D [mm]	Shaft diameter dw [mm]	Transmittable torque or axial force		Dimensions [mm]				Clamping screws DIN EN ISO 4014 - 10.9 μtotal=0.10				Surface pressure of clamping element/hollow shaft	Weight [~kg]	Stock programme
			T [Nm]	F_{ax} [kN]	B	B_1	B_2	d_1	M	Length	Number z	T_A [Nm]	P_H [N/mm²]		
		105	20000	381											
	155 x 265	110	23000	418	71,5	64	50	192	M12	50	12	100	212	15	
		115	26000	452											
		110	22500	409											
NEW	160x 265	115	25500	443	71,5	64	50	192	M12	50	12	100	204	14	
		120	28600	477											
		115	36000	626											
	165 x 290	120	39000	650	81	71	56	210	M16	60	8	250	269	24	
		125	44000	704											
		120	31700	528											
NEW	170 x 290	125	35800	573	81	71	56	210	M16	60	8	250	216	24	
		130	40000	615											
		125	40000	640											
	175 x 300	130	44000	677	81	71	56	220	M16	60	8	250	253	16	
		135	49000	726											
		130	36800	566											
NEW	180 x 300	135	42000	622	81	71	56	220	M16	60	8	250	211	16	
		140	46000	657											
		135	55000	815											
	185 x 330	140	60000	857	96	86	71	236	M16	65	10	250	231	35	
		145	65000	897											
		140	53300	761											
NEW	190 x 330	145	58500	807	96	86	71	236	M16	65	10	250	201	35	
		150	63500	847											
		140	66000	943											
	195 x 350	150	76000	1013	96	86	71	246	M16	65	12	250	259	38	
		155	82000	1058											
		150	73700	983											
	200 x 350	155	79800	1030	96	86	71	246	M16	65	12	250	240	41	
		160	85800	1073											
		160	95000	1188											
	220 x 370	165	102000	1236	114	104	88	270	M16	80	15	250	216	54	
		170	110000	1294											
		170	120000	1412											
	240 x 405	180	140000	1556	121,5	109	92	295	M20	80	12	490	239	67	
		190	160000	1684											
		180	160000	1778											
NEW	250 x 405	190	180000	1895	120,5	108	92	295	M20	85	14	490	263	64	
		200	200000	2000											
		190	165000	1737											
	260 x 430	200	185000	1850	132,5	120	103	321	M20	90	14	490	225	82	
		210	204000	1943											

● Sizes of clamping elements available from stock.
Other sizes on request.

CLAMPEX® KTR 603
Clamping elements

	CLAMPEX® – KTR 603														
	d x D [mm]	Shaft diameter dw [mm]	Transmittable torque or axial force		Dimensions [mm]				Clamping screws DIN EN ISO 4014 - 10.9 µtotal=0.10				Surface pressure of clamping element/hollow shaft	Weight [~kg]	Stock programme
			T [Nm]	F_{ax} [kN]	B	B_1	B_2	d_1	M	Length	Number z	T_A [Nm]	P_H [N/mm²]		
		210	216000	2057											
	280 x 460	220	245000	2227	146,5	134	114	346	M20	100	16	490	217	102	
		230	270000	2348											
		230	274000	2383											
	300 x 485	240	296000	2467	154,5	142	122	364	M20	100	18	490	209	118	
		245	316000	2580											
		240	311000	2592											
	320 x 520	250	340000	2720	154,5	142	122	386	M20	100	20	490	219	131	
		260	375000	2885											
		250	352000	2816											
NEW	330 x 520	260	385000	2962	154,5	142	122	386	M20	100	22	490	224	126,1	
		270	420000	3111											
		250	389000	3112											
	340 x 570	260	422000	3246	168,5	156	134	408	M20	110	24	490	227	186	
		270	459000	3400											
		270	443000	3281											
NEW	350 x 580	280	480000	3429	174,5	162	140	432	M20	110	24	490	212	195	
		285	500000	3509											
		280	462000	3300											
	360 x 590	290	500000	3448	174,5	162	140	432	M20	110	24	490	204	204	
		300	530000	3533											
		290	570000	3931											
NEW	380 x 645	300	610000	4067	183	168	144	458	M24	120	20	840	224	239	
		310	660000	4258											
		300	625000	4167											
NEW	390 x 660	310	670000	4323	183	168	144	468	M24	120	21	840	229	260	
		320	720000	4500											
		315	671000	4260											
NEW	400 x 680	320	695000	4344	183	168	144	480	M24	120	21	840	222	280	
		330	745000	4515											
		330	782000	4739											
NEW	420 x 690	340	841000	4947	203	188	164	504	M24	130	24	840	211	316	
		350	902000	5154											
		340	805000	4735											
NEW	440 x 750	350	861000	4920	217	202	177	527	M24	140	24	840	190	408	
		360	920000	5111											
		360	1000000	5556											
NEW	460 x 770	370	1073000	5800	217	202	177	547	M24	140	28	840	210	420	
		380	1141000	6005											
		380	1175000	6184											
NEW	480 x 800	390	1250000	6410	228	213	188	570	M24	140	30	840	206	505	
		400	1312000	6560											
		400	1314000	6570											
NEW	500 x 850	410	1382000	6741	230	213	188	590	M27	150	24	1250	205	575	
		420	1460000	6952											

● Sizes of clamping elements available from stock.
Other sizes on request.

CLAMPEX® KTR 620
Clamping elements

Two-part external clamping set for applications on hollow shafts





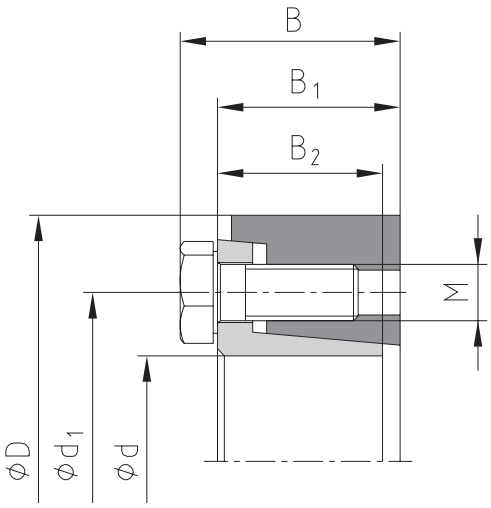

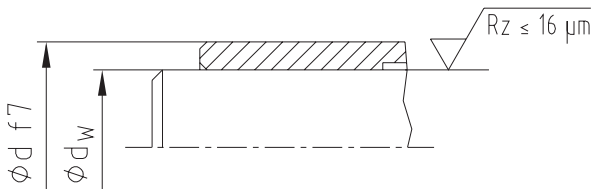

Tolerances for d_W

$d_W \leq Ø\ 160$ = h6/H7

$d_W > Ø\ 160$ = g6/H7

Bigger tolerances are generally available! Please contact us!

Example of application of hub type

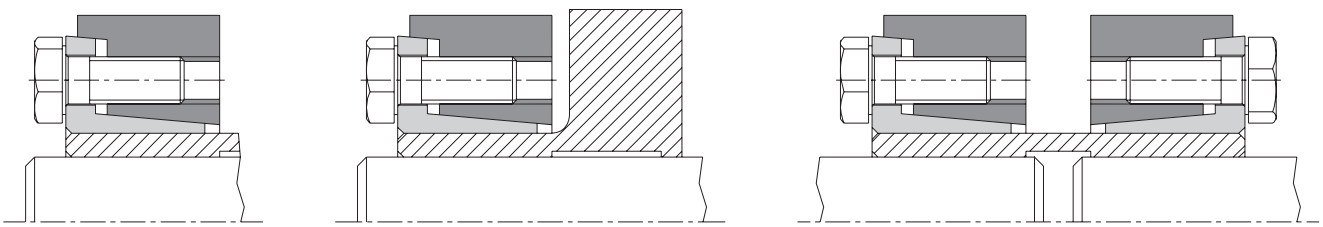

Ordering example:	KTR 620	55	x	100
	Series	Size of internal diameter d		Size of external diameter D

CLAMPEX® – KTR 620

	d x D [mm]	Shaft diameter d_W [mm]	Transmittable torque or axial force		Dimensions [mm]				Clamping screws DIN EN ISO 4017 - 12.91) µtotal=0.10				Surface pressure of clamping element/hollow shaft	Weight [~kg]	Stock programme
			T [Nm]	F_{ax} [kN]	B	B_1	B_2	d_1	M	Länge	z Anzahl	T_A [Nm]	P_H [N/mm²]		
	16 x 41	13	70	11	19,5	15,3	13,5	28	M6	12	3	13	254	0,1	
		14	90	13											
NEW	18 x 44	15	80	11	19,5	15,3	13,5	30	M6	12	4	13	222	0,1	
		16	110	14											
	20 x 47	17	150	18	19,5	15,3	13,5	32	M6	12	4	13	274	0,1	●
		18	175	19											
		19	165	17											
	24 x 50	20	215	22	22	18,22	16	36	M6	16	5	13	243	0,2	●
		22	280	25											
		20	200	20											
NEW	26 x 51,5	22	260	24	22	18,05	16	38	M6	16	5	13	238	0,2	
		24	330	28											
		24	370	31											
	30 x 60	25	420	34	24	20,26	18	44	M6	16	6	13	255	0,3	●
		26	465	36											
		27	480	36											
	36 x 72	30	650	43	27,5	22,1	20	52	M8	20	5	30	250	0,5	●
		33	835	51											
		27	480	36											
	38 x 72	30	645	43	27,5	22,1	20	54	M8	20	5	30	240	0,5	●
		33	765	46											
	40 x 80	34	830	49	29,5	24,22	22	61	M8	20	6	30	209	0,6	●
	44 x 80	35	770	44	29,5	24,22	22	61	M8	20	6	30	192	0,6	●
		37	880	48											
		38	1130	59											
	50 x 90	40	1260	63	31,5	26,1	23,5	68	M8	20	8	30	212	0,8	●
		42	1400	67											
		42	1300	62											
	55 x 100	45	1600	71	34,5	29	26	72	M8	20	8	30	195	1,1	●
		48	1900	79											
		48	1700	71											
	60 x 110	50	1950	78	34,5	29,25	26	80	M8	20	9	30	191	1,3	●
		52	2160	83											
		48	1700	71											
	62 x 110	50	1950	78	34,5	29,25	26	80	M8	20	9	30	189	1,3	●
		52	2160	83											
		50	1900	76											
	68 x 115	55	2500	91	35	29,4	26	86	M8	20	9	30	206	1,3	●
		60	3150	105											
		55	2700	98											
	75 x 138	60	3400	113	37,5	30,7	27	100	M10	25	10	60	211	2,3	●
		65	4100	126											
		60	3300	110											
	80 x 141	65	4100	126	37,5	31,1	27	104	M10	25	10	60	215	2,3	●
		70	4950	141											
		65	5500	169											
NEW	85 x 155	70	6400	183	44,5	38,2	34	114	M10	25	11	60	216	3,2	
		75	7300	195											
		65	5500	169											
	90 x 155	70	6600	189	44,5	38,2	34	114	M10	25	11	60	223	3,2	●
		75	7900	211											
		70	6200	177											
NEW	95 x 170	75	7400	197	50	43,45	39	124	M10	30	14	60	182	4,3	
		80	8600	215											
		70	6200	177											
	100 x 170	75	7400	197	50	43,45	39	124	M10	30	14	60	176	4,3	●
		80	8600	215											
		80	10500	263											
NEW	105 x 185	85	11800	278	56,5	49,1	43,5	136	M12	35	12	100	208	5,8	
		90	13700	304											
		80	10500	263											
	110 x 185	85	11800	278	56,5	49,1	43,5	136	M12	35	12	100	202	5,8	●
		90	13700	304											
		85	12500	294											
NEW	115 x 197	90	14100	313	60,5	53	48	147	M12	35	14	100	193	6,9	
		95	16000	337											
		85	12500	294											
	120 x 197	90	14100	313	60,5	53	48	147	M12	35	14	100	189	6,9	
		95	16000	337											

● Sizes of clamping elements available from stock.
[1] DIN EN ISO 4017-10.9 for size 16 x 41 to 20 x 47

Two-part external clamping set for applications on hollow shafts

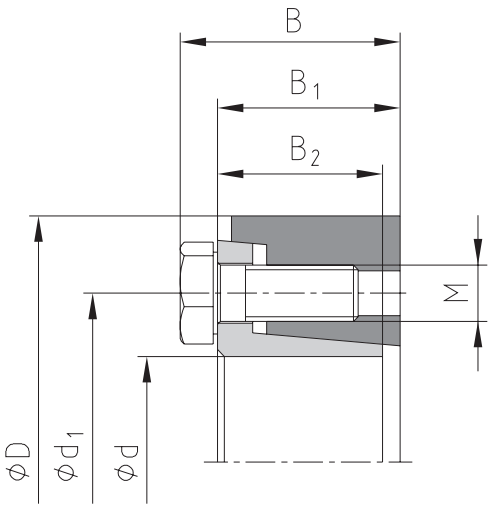

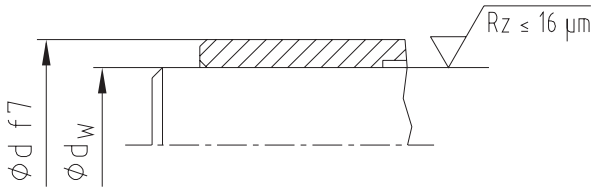

CLAMPEX® – KTR 620

	d x D [mm]	Shaft diameter d_w [mm]	Transmittable torque or axial force		Dimensions [mm]				Clamping screws DIN EN ISO 4017 - 12.9 μ_{total}=0.10				Surface pressure of clamping element/hollow shaft	Weight [~kg]	Stock programme
			T [Nm]	F_{ax} [kN]	B	B_1	B_2	d_1	M	Length	Number z	T_A [Nm]	P_H [N/mm²]		
		90	14500	322											
	125 x 215	95	16600	349	61	53,4	48	158	M12	35	14	100	196	8,7	●
		100	18800	376											
		95	17000	358											
NEW	130 x 215	100	18400	368	61	53,4	48	158	M12	35	14	100	187	9,4	
		110	22000	400											
		95	18400	387											
	130 x 230	100	20800	416	66,5	57,5	51	165	M14	40	12	160	213	10,8	●
		110	26200	476											
		95	18400	387											
NEW	135x 230	100	20800	416	66,5	57,5	51	165	M14	40	12	160	209	10,8	
		110	26200	476											
		100	19900	398											
	140 x 230	105	22200	423	67	57,8	51	172	M14	40	12	160	207	10,3	
		115	27800	483											
		110	27000	491											
NEW	150 x 263	120	32000	533	71	62,2	55	186	M14	40	14	160	202	15,2	
		125	36200	579											
		110	27000	491											
	155 x 263	120	32000	533	71	62,2	55	186	M14	40	14	160	199	15,2	
		125	36200	579											
		120	39000	650											
NEW	160 x 290	130	48000	738	78,5	68,5	61	198	M16	45	12	250	215	21,5	
		135	51000	756											
		120	39000	650											
	165 x 290	130	48000	738	78,5	68,5	61	198	M16	45	12	250	212	21,5	
		135	51000	756											
		130	46500	715											
NEW	170 x 300	140	53000	757	79	68,9	61	208	M16	50	14	250	212	22,5	
		145	59000	814											
		130	46500	715											
	175 x 300	140	53000	757	79	68,9	61	208	M16	50	14	250	209	22,5	●
		145	59000	814											
		140	66000	943											
NEW	180 x 320	150	76000	1013	95	85	77,5	222	M16	50	16	250	210	32,7	
		155	83000	1071											
		140	66000	943											
	185 x 320	150	76000	1013	95	85	77,5	222	M16	50	16	250	207	32,7	
		155	83000	1071											
		150	82000	1093											
NEW	190 x 340	160	91000	1138	98	87,7	77,5	238	M16	50	16	250	225	36,3	
		165	102000	1236											
		150	82000	1093											
NEW	195 x 340	160	91000	1138	98	87,7	77,5	238	M16	50	16	250	222	36,3	
		165	102000	1236											
		150	82000	1093											
	200 x 340	160	91000	1138	98	87,7	77,5	238	M16	50	16	250	219	36,3	
		165	102000	1236											

● Sizes of clamping elements available from stock.

CLAMPEX® KTR 620
Clamping elements

	CLAMPEX® – KTR 620														
	d x D [mm]	Shaft diameter d_W [mm]	Transmittable torque or axial force		Dimensions [mm]				Clamping screws DIN EN ISO 4017 - 12.92) µtotal=0.10				Surface pressure of clamping element/hollow shaft	Weight [~kg]	Stock programme
			T [Nm]	F_{ax} [kN]	B	B_1	B_2	d_1	M	Length	Number z	T_A [Nm]	P_H [N/mm²]		
		160	105000	1313											
	220 x 370	170	122000	1435	120	107,55	96,5	268	M20	60	15	480	205	53	
		180	138000	1533											
		170	125000	1471											
	240 x 405	180	145000	1611	123,5	111,1	98	288	M20	60	16	480	214	66	
		200	182000	1820											
		190	165000	1737											
	260 x 430	200	190000	1900	138	125,3	110,5	312	M20	60	16	480	202	82	
		220	238000	2164											
		210	220000	2095											
	280 x 460	220	245000	2227	152,5	140	121	334	M20	60	18	480	193	103	
		240	300000	2500											
		220	297000	2700											
	300 x 485	230	330000	2870	159	139,8	124	360	M24	70	16	840	205	120	
		250	399000	3192											
		240	331000	2758											
	320 x 520	250	365000	2920	160,5	141,6	124	380	M24	70	18	840	190	138	
		270	437000	3237											
		250	429000	3432											
	340 x 570	260	469000	3608	177,5	158,4	139	402	M24	70	18	840	195	189	
		280	556000	3971											
		270	545000	4037											
	360 x 590	280	592000	4229	182	163	143	424	M24	70	20	840	216	207	
		290	694000	4786											
		290	704000	4855											
NEW	390 x 650	300	760000	5067	191	169,2	148	454	M27	70	18	1250	216	249	
		320	879000	5494											
		320	827000	5169											
NEW	420 x 670	330	876000	5309	208,4	186,4	166	486	M27	70	20	1250	184	285	
		350	1000000	5714											
		340	1117000	6571											
NEW	440 x 710	350	1190000	6800	220	198	179	506	M27	70	21	1250	222	343	
		370	1345000	7270											
		360	1306000	7256											
NEW	460 x 750	370	1386000	7492	223	201	179	534	M27	70	21	1250	230	387	
		390	1554000	7969											
		370	950000	5135											
NEW	470 x 705	380	1000000	5263	241,6	219,6	200	538	M27	70	21	1250	151	340	
		400	1150000	5750											
		380	1557000	8195											
NEW	480 x 770	390	1648000	8451	247	223	201	552	M30	100	21	1650	223	449	
		410	1818000	8868											
		400	1653000	8265											
NEW	500 x 820	410	1725000	8415	241	217	198	572	M30	100	24	1650	214	515	
		430	1915000	8907											
		430	2048000	9526											
NEW	530 x 850	440	2154000	9791	262,3	238,3	216	606,5	M30	100	24	1650	208	585	
		460	2374000	10322											
		450	2306000	10249											
NEW	560 x 885	460	2419000	10517	266	242	220	632	M30	100	24	1650	212	636	
		480	2654000	11058											
		470	2735000	11638											
NEW	590 x 950	480	2863000	11929	281,5	257,5	236	664	M30	100	28	1650	211	805	
		500	3128000	12512											
		500	3150000	12600											
NEW	620 x 960	520	3396000	13062	307	283	258	706	M30	100	28	1650	201	853	
		540	3689000	13663											
		530	3636000	13721											
NEW	660 x 1020	550	3942000	14335	319	293	267	748	M33	130	28	2250	199	993	
		570	4261000	14951											
		560	4189000	14961											
NEW	700 x 1085	580	4520000	15586	318,5	292,5	263	788	M33	130	28	2250	187	1112	
		600	4863000	16210											
		600	5281000	17603											
NEW	750 x 1100	620	5672000	18297	346	320	280	850	M33	130	32	2250	202	1111	
		650	6287000	19345											
		640	6091000	19034											
NEW	800 x 1230	660	6511000	19730	359	333	296	900	M33	130	32	2250	202	1589	
		700	7394000	21126											

● Sizes of clamping elements available from stock.
[2)] DIN EN ISO 4014- 12.9 for size 660 x 1020 to 800 x 1230

Rigid shaft coupling to connect two shaft ends





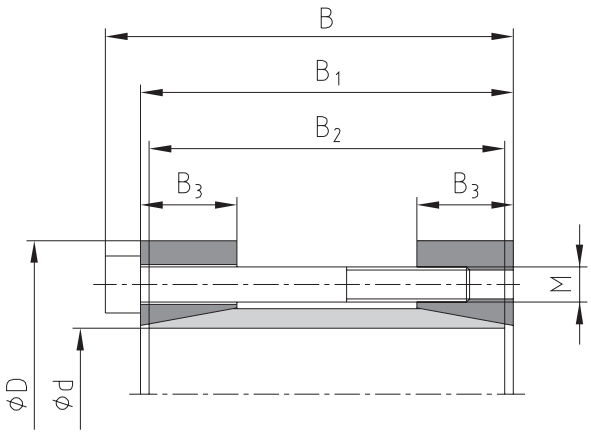

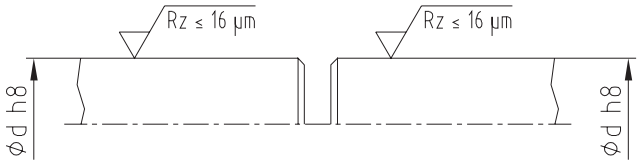

Example of application

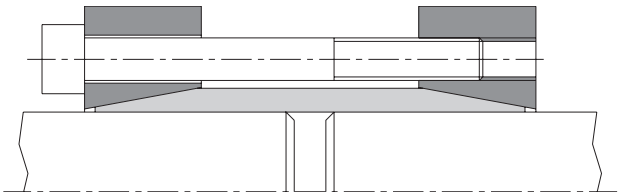

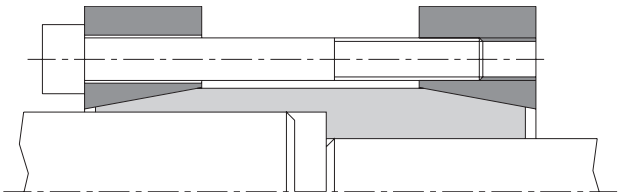

Type on request

Ordering example:	KTR 700	35	x	75
	Series	Size of internal diameter d		Size of external diameter D

CLAMPEX® – KTR 700

d x D [mm]	Dimensions [mm]				Clamping screws DIN EN ISO 4762 - 12.9 µtotal=0.14				Transmittable torque or axial force		Surface pressure of clamping element/ hollow shaft	Weight [~kg]	Stock programme
	B	B_1	B_2	B_3	M	Length	Number z	T_A [Nm]	T [Nm]	F_{ax} [kN]	P_W [N/mm²]		
10 x 35	42	38	36	15	M4	30	6	5,5	62	12	219	0,2	
11 x 35	42	38	36	15	M4	30	6	5,5	66	12	193	0,2	
12 x 35	42	38	36	15	M4	30	6	5,5	72	12	177	0,2	
14 x 35	42	38	36	15	M4	30	6	5	76	11	137	0,2	
15 x 45	56	50	47	15	M6	45	4	17	160	21	252	0,4	
16 x 45	56	50	47	15	M6	45	4	17	170	21	235	0,4	
17 x 45	56	50	47	15	M6	45	4	17	180	21	220	0,4	●
18 x 50	56	50	47	15	M6	45	4	17	190	21	207	0,5	
19 x 50	56	50	47	15	M6	45	4	17	200	21	196	0,4	
20 x 50	56	50	47	15	M6	45	4	17	220	22	195	0,4	●
22 x 55	66	60	57	18	M6	55	6	17	360	33	219	0,5	
24 x 55	66	60	57	18	M6	55	6	17	390	33	200	0,6	
25 x 55	66	60	57	18	M6	55	6	17	400	32	189	0,6	●
28 x 60	66	60	57	18	M6	55	6	17	390	28	147	0,8	
30 x 60	66	60	57	18	M6	55	6	17	420	28	138	0,7	●
32 x 75	83	75	72	20	M8	70	4	41	610	38	158	0,1	
35 x 75	83	75	72	20	M8	70	4	41	670	38	145	1,3	●
38 x 75	83	75	72	20	M8	70	4	41	730	38	134	1,2	
40 x 75	83	75	72	20	M8	70	4	41	760	38	126	1,2	●
42 x 85	93	85	81	22	M8	80	6	41	1170	56	160	1,8	
45 x 85	93	85	81	22	M8	80	6	41	1260	56	150	1,7	
48 x 90	93	85	81	22	M8	80	6	41	1360	57	142	1,9	
50 x 90	93	85	81	22	M8	80	6	41	1400	56	135	1,8	●
55 x 95	93	85	81	22	M8	80	8	41	2000	73	159	2,0	
60 x 100	93	85	81	22	M8	80	8	41	2260	75	151	2,2	●
65 x 105	93	85	81	22	M8	80	8	41	2500	77	143	2,6	
70 x 115	110	100	96	35	M10	80	8	83	3300	94	102	4,1	
75 x 120	110	100	96	35	M10	80	8	83	3500	93	94	4,3	
80 x 125	110	100	96	35	M10	80	7	75	3900	98	92	4,5	
90 x 136	110	100	96	35	M10	80	8	75	5100	113	95	5,2	
100 x 158	132	120	116	40	M12	100	8	130	8350	167	111	6,0	

● Sizes of clamping elements available from stock.

Series on request

SPH Clamping sleeve

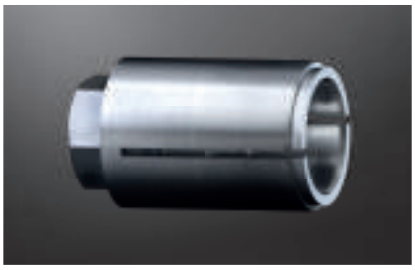

Self-centering

- Fast assembly and disassembly via one screw only
- Suitable for small hub dimensions
- Applications: sprockets, toothed belt pulleys that are mounted on the shaft end
- Please order dimension sheet M548658

SPB Clamping sleeve

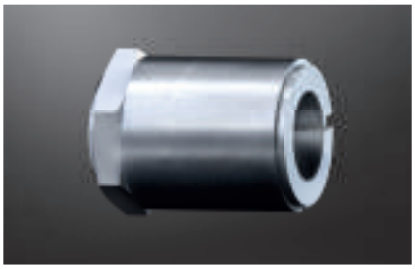

Self-centering

- Assembly via one central nut
- Suitable for small hub dimensions
- Applications: medical equipment, measuring and control technology, small gearboxes
- Please order dimension sheet M548677

KTR 401

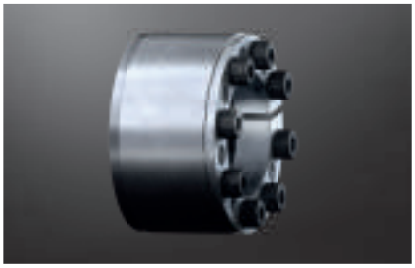

Self-centering, short design

- Clamping element for highest load
- Specifically suitable for vibratory torques
- Typical applications: flywheels, belt drums
- Smaller dimensions than with KTR 400
- Please order dimension sheet M367699

KTR 125 and KTR 125.1

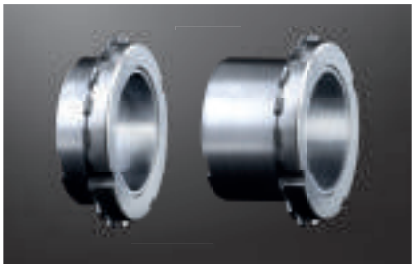

KTR 125
Not self-centering
Short design

KTR 125.1
Self-centering
Long design

- Clamping element for applications with low demands
- Very easy assembly
- Please order dimension sheet M367700

Large screw connections for easy and quick assembly

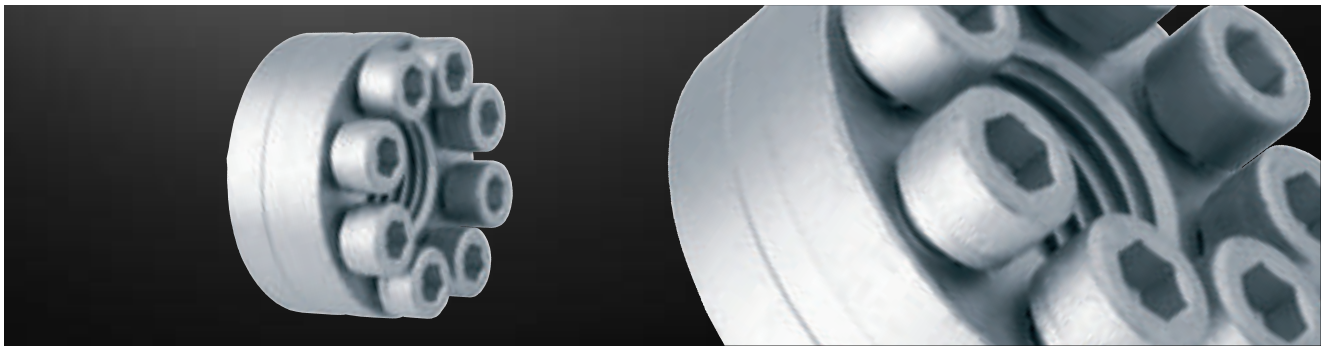

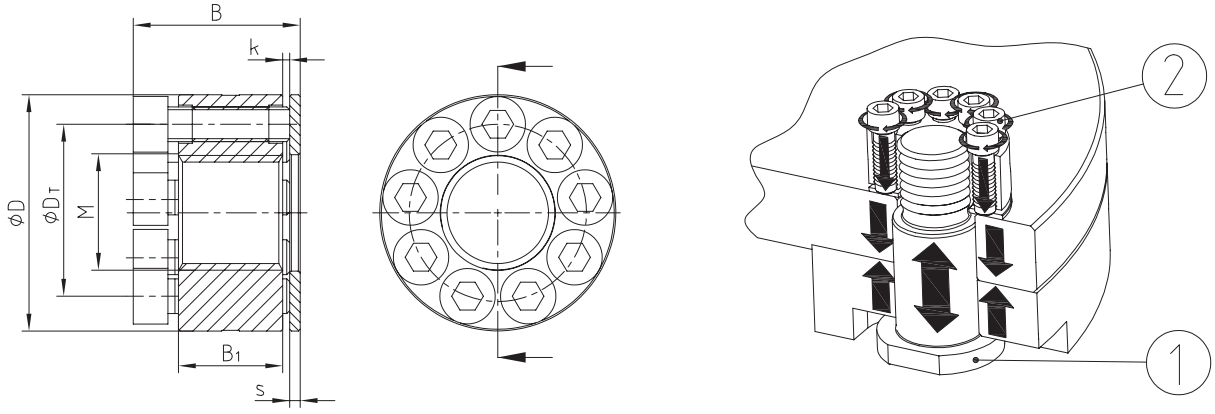

KTR clamping nuts												
Size	Dimensions [mm]						Thrust bolt item 2		Property class 8.8 screw pos. 1		Property class 10.9 screw pos. 1	
	D	D_T	B	B_1	s	k	DIN EN ISO 4762	No. z	Tightening torque * [Nm]	Prestress [N]	Tightening torque * [Nm]	Prestress [N]
M24 x 3,0	52	39	36,0	20	3,0	1 - 2	M8	8	21	174000	30	249000
M27 x 3,0	57	42	41,0	25	3,0	1 - 2	M8	9	24	224000	30	280000
M30 x 3,5	65	48	43,0	25	3,0	1 - 2	M10	8	41	274000	60	401000
M33 x 3,5	68	51	48,0	30	3,0	1 - 2	M10	9	45	338000	60	451000
M36 x 4,0	80	58	50,0	30	3,0	1 - 2	M12	8	71	396000	105	586000
M42 x 4,5	86	64	55,0	35	3,0	1 - 2	M12	10	78	544000	105	732000
M48 x 5,0	90	72	60,0	40	3,0	1 - 2	M12	11	94	721000	105	806000
M52 x 5,0	100	79	66,5	42	4,5	1 - 2	M12	13	95	862000	105	952000
M56 x 5,5	108	83	75,5	45	4,5	1 - 2	M16	9	210	1001000	250	1192000
M60 x 5,5	112	86	80,5	48	4,5	1 - 2	M16	10	215	1139000	250	1325000
M64 x 6,0	120	92	84,0	52	8,0	1 - 2	M16	11	225	1311000	250	1457000
M72 x 6,0	142	107	98,0	58	8,0	1 - 2	M20	10	400	1696000	490	2077000
M80 x 6,0	164	122	103,0	64	8,0	1 - 2	M20	12	420	2137000	490	2493000

* each screw item 2

Used on a 100 kNm test bench bottle

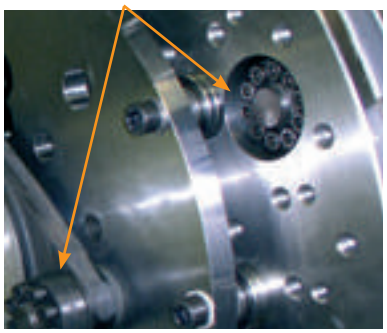

Used on couplings for wind power stations

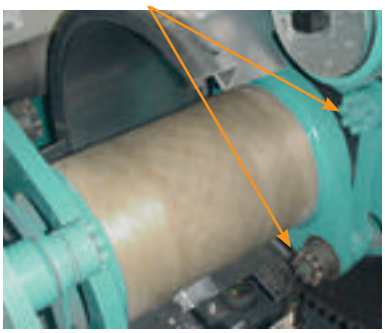

Available as a complete unit including setscrew

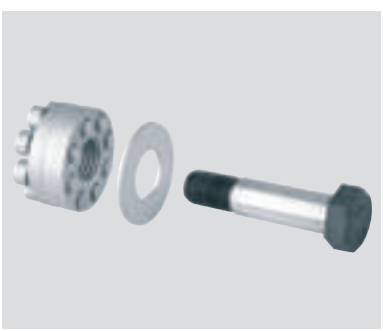

Ordering example:	KTR clamping nut	M33 x 3,5
	Description	Size

Selection and sizing according to DIN 808 with plain/needle bearing

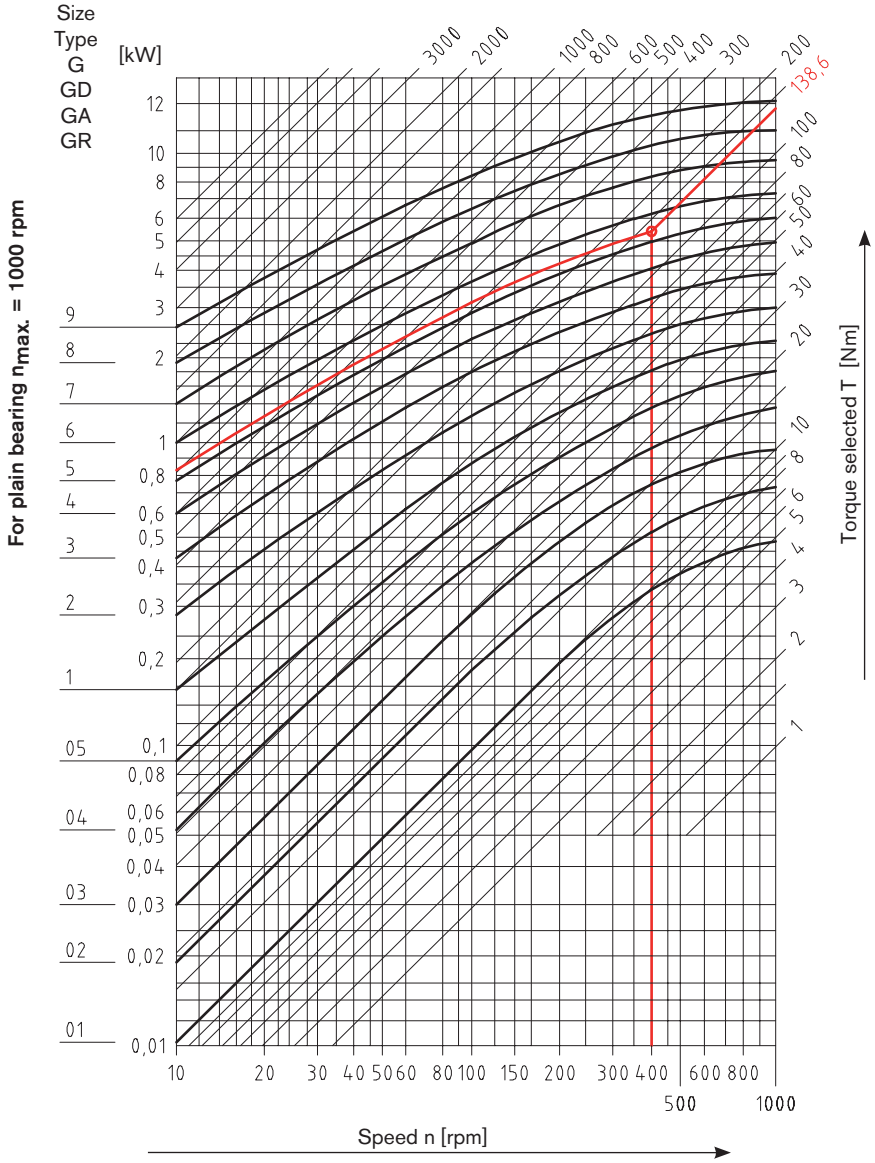

Selection of type G, GD, GA, GR (max. 1000 rpm) [1)]

The selection of precision joints with plain bearing is based on the driving torque considering a correction value which depends on the diffraction angle α and the operating speed.
For extendable joints the overall length and the speed need to be considered for sizing in addition (please consult with KTR's engineering department).

$$\text{Driving torque } M_t \text{ [Nm]} = 9550 \bullet \frac{\text{power [kW]}}{\text{speed [rpm]}}$$

$$\text{Torque selected T [Nm]} = \text{driving tortque} \bullet \text{correcting value}$$

Additional review:

$$^{1)}\ \text{Diffraction angle [°]} \bullet \text{speed [rpm]} \leq 40{,}000$$

Diffraction angle [α]	5°	10°	15°	20°	25°	30°	35°	40°	45°
Correction value	0,8	1,00	1,25	1,5	1,8	2,2	2,6	3,3	4,0

Details given:

Driving torque Mt	63 Nm	
Diffraction angle	30°	➔ Correction value for diffraction angle 2.2
Operating speed	400 rpm	

$$\text{Torque selected T [Nm]} = 63 \text{ Nm} \bullet 2.2 \rightarrow 138.6 \text{ Nm}$$

Selection based on table : Joint size 6

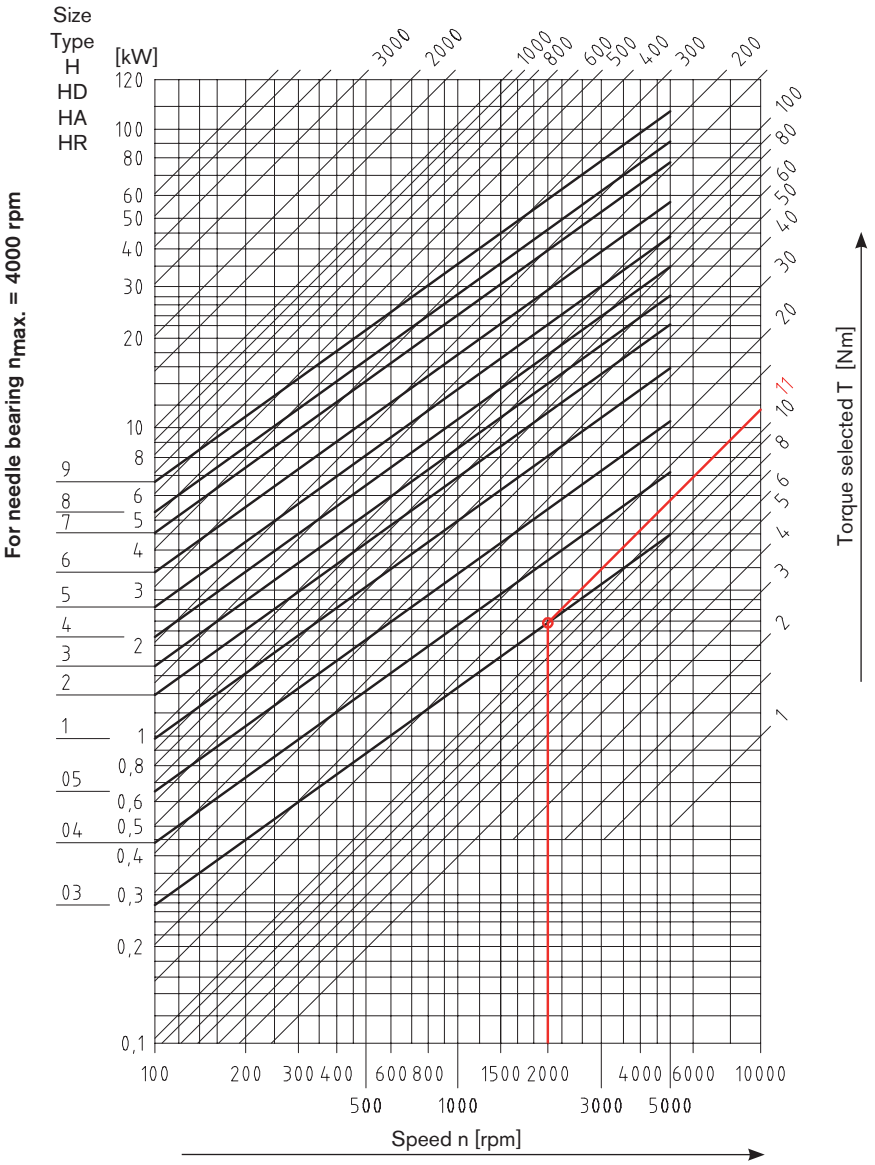

Selection of type H, HD, HA, HR (max. 4000 rpm) [1)]

The precision joints with needle bearing are selected based on the driving torque considering a correction value depending on the articulation angle α and the operating speed.
For extendable joints the overall length and the speed need to be considered for sizing in addition (please consult with KTR's engineering department).

$$\text{Driving torque Mt [Nm]} = 9550 \bullet \frac{\text{power [kW]}}{\text{speed [rpm]}}$$

$$\text{Torque selected T [Nm]} = \text{driving torque} \bullet \text{correction value}$$

Additional review:

$$^{1)}\,\text{Diffraction angle [°]} \bullet \text{speed [rpm]} \leq 40{,}000$$

Diffraction angle [α]	5°	10°	15°	20°	25°	30°	35°	40°	45°
Correction value	0,8	1,00	1,1	1,25	1,4	2,0	2,5	3,3	4,0

Details given:

Driving torque Mt	8,8 Nm	
Diffraction angle	20°	→ Correction value for diffraction angle 1.25
Operating speed	2000 rpm	

$$\text{Torque selected T [Nm]} = 8.8\ \text{Nm} \bullet 1.25 \bullet 11\ \text{Nm}$$

Selection based on table: joint size 03

According to DIN 808 with plain bearing





Precision single joint G

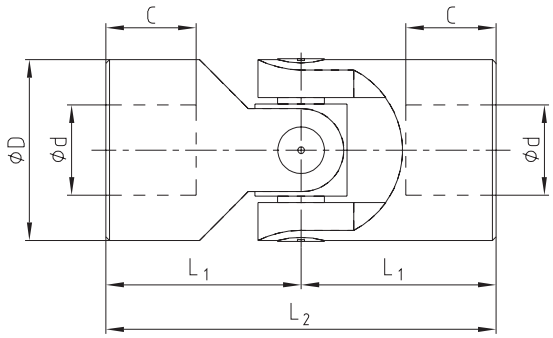

Precision double joint GD

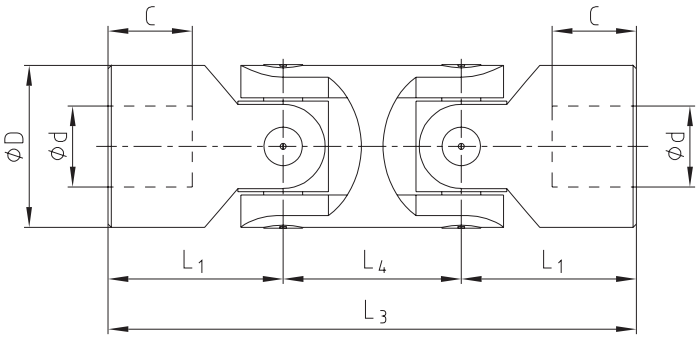

Finish bores:

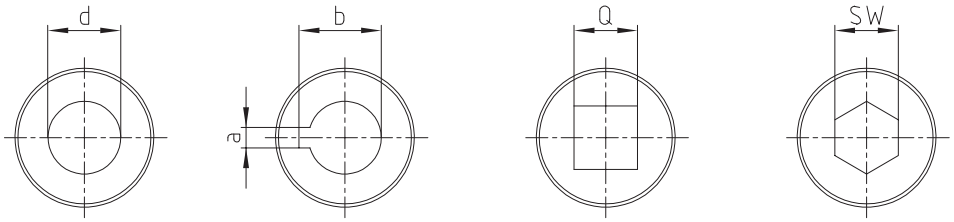

Type G and GD															
Types and size														Weight [kg]	
Size G	DIN description G	Size GD	DIN description GD	d [H7]	D	L_2	L_1	C	L_4	L_3	a [JS9]	b	Q [H10]	SW [H10]	G	GD
01 G	E6 x 16-G	01 GD	D6 x 16-G	6	16	34	17	8	22	56	2	7,0	6	6	0,05	0,08
02 G	E8 x 16-G	02 GD	D8 x 16-G	8	16	40	20	11	22	62	2	9,0	8	8	0,05	0,08
03 G	E10 x 22-G	03 GD	D10 x 22-G	10	22	48	24	12	26	74	3	11,4	10	10	0,10	0,15
04 G	E12 x 25-G	04 GD	D12 x 25-G	12	25	56	28	13	30	86	4	13,8	12	12	0,16	0,25
05 G	E14 x 28-G	05 GD	D14 x 28-G	14	28	60	30	14	36	96	5	16,3	14	14	0,20	0,40
1 G	E16 x 32-G	1 GD	D16 x 32-G	16	32	68	34	16	37	105	5	18,3	16	16	0,30	0,45
2 G	E18 x 36-G	2 GD	D18 x 36-G	18	36	74	37	17	40	114	6	20,8	18	18	0,45	0,70
3 G	E20 x 42-G	3 GD	D20 x 42-G	20	42	82	41	18	47	129	6	22,8	20	20	0,60	1,00
4 G	E22 x 45-G	4 GD	D22 x 45-G	22	45	95	47,5	22	50	145	6	24,8	22	22	0,95	1,55
5 G	E25 x 50-G	5 GD	D25 x 50-G	25	50	108	54	26	55	163	8	28,3	25	25	1,20	2,00
6 G	E30 x 58-G	6 GD	D30 x 58-G	30	58	122	61	29	68	190	8	33,3	30	30	1,85	2,90
6 G1	E32 x 58-G	6 GD1	D32 x 58-G	32	58	130	65	33	68	198	10	35,3	30	30	2,00	3,00
7 G	E35 x 70-G	7 GD	D35 x 70-G	35	70	140	70	33	72	212	10	38,3	-	-	3,15	4,75
8 G	E40 x 80-G	8 GD	D40 x 80-G	40	80	160	80	38	85	245	12	43,3	-	-	4,60	7,20
9 G	E50 x 95-G	9 GD	D50 x 95-G	50	95	190	95	46	100	290	14	53,8	-	-	7,60	12,0

Ordering example:	04 G	Ø12	Ø12 Nute DIN
	Size and type of joint	Finish bore (H7)	Finish bore (H7) feather keyway acc. to DIN 6885 sheet 1 (JS9)

According to DIN 808 with needle bearing





Precision single joint H

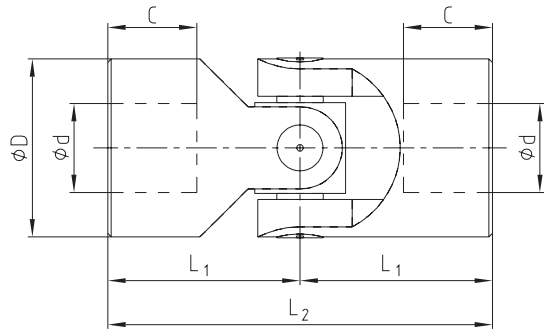

Precision double joint HD

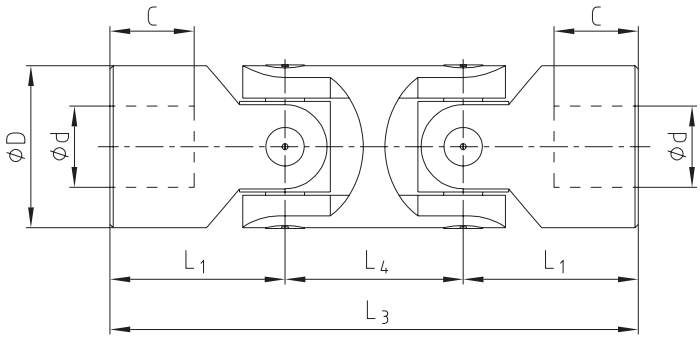

Finish bores:

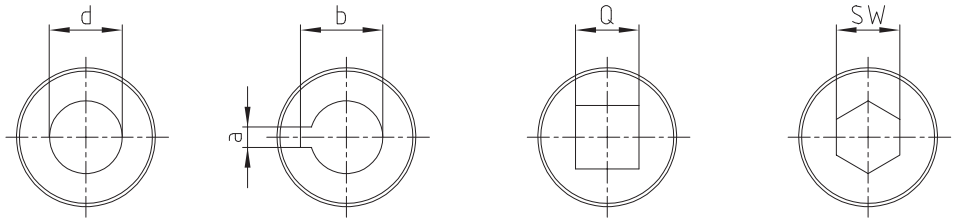

Type H and HD																
Types and size				Dimensions [mm]											Weight [kg]	
Size H	DIN description to H	Size HD	DIN description HD	d [H7]	D	L_2	L_1	C	L_4	L_3	a [JS9]	b	Q [H10]	SW [H10]	H	HD
03 H	E10 x 22-W	03 HD	D10 x 22-W	10	22	48	24	12	26	74	3	11,4	10	10	0,10	0,15
04 H	E12 x 25-W	04 HD	D12 x 25-W	12	25	56	28	13	30	86	4	13,8	12	12	0,16	0,25
05 H	E14 x 28-W	05 HD	D14 x 28-W	14	28	60	30	14	36	96	5	16,3	14	14	0,20	0,40
1 H	E16 x 32-W	1 HD	D16 x 32-W	16	32	68	34	16	37	105	5	18,3	16	16	0,30	0,45
2 H	E18 x 36-W	2 HD	D18 x 36-W	18	36	74	37	17	40	114	6	20,8	18	18	0,45	0,70
3 H	E20 x 42-W	3 HD	D20 x 42-W	20	42	82	41	18	47	129	6	22,8	20	20	0,60	1,00
4 H	E22 x 45-W	4 HD	D22 x 45-W	22	45	95	47,5	22	50	145	6	24,8	22	22	0,95	1,55
5 H	E25 x 50-W	5 HD	D25 x 50-W	25	50	108	54	26	55	163	8	28,3	25	25	1,20	2,00
6 H	E30 x 58-W	6 HD	D30 x 58-W	30	58	122	61	29	68	190	8	33,3	30	30	1,85	2,90
6 H1	E32 x 58-W	6 HD1	D32 x 58-W	32	58	130	65	33	68	198	10	35,3	30	30	2,00	3,00
7 H	E35 x 70-W	7 HD	D35 x 70-W	35	70	140	70	33	72	212	10	38,3	-	-	3,15	4,75
8 H	E40 x 80-W	8 HD	D40 x 80-W	40	80	160	80	38	85	245	12	43,3	-	-	4,60	7,20
9 H	E50 x 95-W	9 HD	D50 x 95-W	50	95	190	95	46	100	290	14	53,8	-	-	7,60	12,0

Ordering example:	1 H	Ø16	Ø16 Nute DIN
	Size and type of joint	Finish bore (H7)	Finish bore (H7) feather keyway acc. to DIN 6885 sheet 1 (JS9)

According to DIN 808 with plain and needle bearing (extendable)



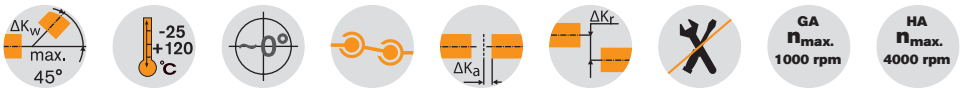

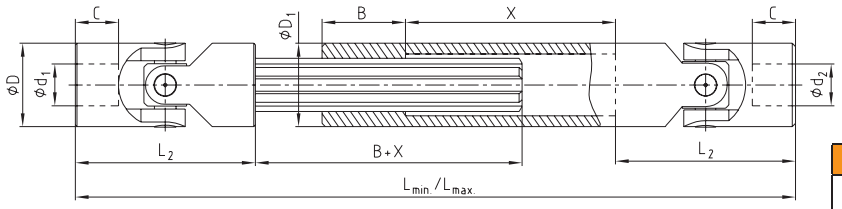

Preferred lengths									
Size	Dimensions [mm] $L_{min.}$ / $L_{max.}$								
03	140 170	160 200	180 240	230 330					
04	160 190	180 225	200 270	220 300	250 355	280 420	300 450		
05	170 200	180 220	200 260	220 300	250 350	280 420	300 450	350 550	400 650
1	190 220	210 250	240 320	250 350	275 390	300 430	380 590	400 630	
2	230 280	250 320	270 370	290 400	300 415	400 620	500 820		
3	250 300	270 340	290 380	320 440	380 560	420 640	500 800		
4	250 280	270 320	290 350	330 430	350 470	470 710			
5	295 345	310 375	350 450	380 500	420 590	460 660	500 745		
6	330 380	350 420	370 455	400 510	450 620	500 720	540 795		

Finish bores:

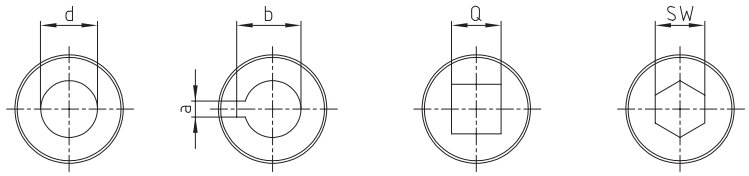

Type GA with plain bearing $n_{max.}$ = 1000 rpm and type HA with needle bearing $n_{max.}$ = 4000 rpm													
Size		Dimensions [mm]										Spline shaft	D_1
GA	HA	d_1, d_2 [H7]	D	L_2	C	$L_{min.}$ / $L_{max.}$ / X	B	a [JS9]	b	Q [H10]	SW [H10]		
01 GA	-	6	16	34	8	← as specified by the customer →	25	2	7,0	6	6	SW8	16
02 GA	-	8	16	40	11	← →	25	2	9,0	8	8	SW8	16
03 GA	03 HA	10	22	48	12	← →	30	3	11,4	10	10	11 x 14 Z6	22
04 GA	04 HA	12	25	56	13	← →	40	4	13,8	12	12	13 x 16 Z6	26
05 GA	05 HA	14	28	60	14	← →	40	5	16,3	14	14	13 x 16 Z6	29
1 GA	1 HA	16	32	68	16	← →	40	5	18,3	16	16	16 x 20 Z6	32
2 GA	2 HA	18	36	74	17	← →	40	6	20,8	18	18	18 x 22 Z6	37
3 GA	3 HA	20	42	82	18	← →	45	6	22,8	20	20	21 x 25 Z6	42
4 GA	4 HA	22	45	95	22	← →	45	6	24,8	22	22	23 x 28 Z6	47
5 GA	5 HA	25	50	108	26	← →	45	8	28,3	25	25	26 x 32 Z6	52
6 GA	6 HA	30	58	122	29	← →	50	8	33,3	30	30	32 x 38 Z8	58
7 GA	7 HA	35	70	140	33	← →	70	10	38,3	-	-	36 x 42 Z8	70
8 GA	8 HA	40	80	160	38	← →	80	12	43,3	-	-	42 x 48 Z8	80
9 GA	9 HA	50	95	190	46	← →	90	14	53,8	-	-	46 x 54 Z8	95

Calculation of mounting lengths L and X (stroke)

Hub $X \geq \frac{L_{max} - 2 \bullet L_2 - B}{2}$

$L_{min} \geq \frac{L_{max} + 2 \bullet L_2 + B}{2}$

Kleinstmaß $L_{min} = L_2 + B + X + L_2$

Ordering example:	3 GA	d_1 = Ø20	d_2 = Ø20 Nute DIN	550/650
	Size and type of joint	Finish bore (H7)	Finish bore (H7), feather keyway according to DIN 6885 sheet 1 (JS9)	Mounting length $L_{min.}$/$L_{max.}$

According to DIN 808 with plain bearing made of stainless steel 1.4301





Precision single joint X

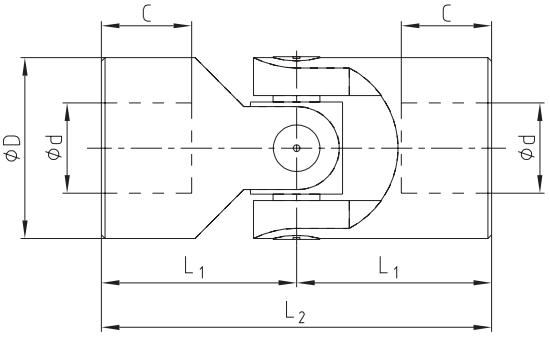

Precision double joint XD

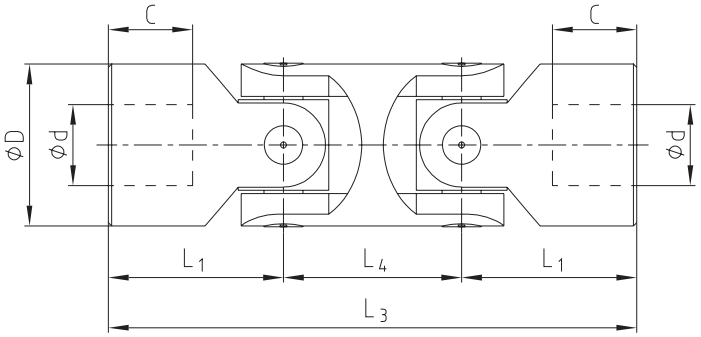

Finish bores:

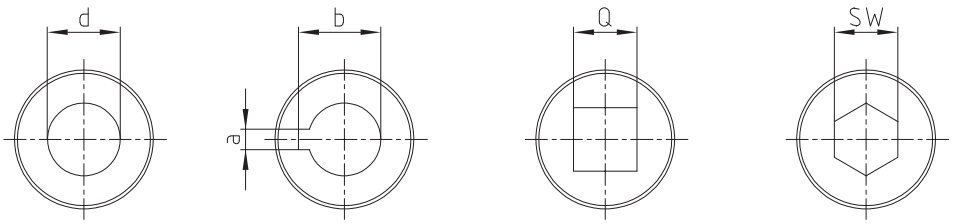

Type X and XD																
Types and size				Dimensions [mm]											Weight [kg]	
Size X	DIN description X	Size XD	DIN description XD	d [H7]	D	L_2	L_1	C	L_4	L_3	a [JS9]	b	Q [H10]	SW [H10]	X	XD
01 X	E6 x 16-G	01 XD	D6 x 16-G	6	16	34	17	8	22	56	2	7,0	6	6	0,05	0,08
02 X	E8 x 16-G	02 XD	D8 x 16-G	8	16	40	20	11	22	62	2	9,0	8	8	0,05	0,08
03 X	E10 x 22-G	03 XD	D10 x 22-G	10	22	48	24	12	26	74	3	11,4	10	10	0,10	0,15
04 X	E12 x 25-G	04 XD	D12 x 25-G	12	25	56	28	13	30	86	4	13,8	12	12	0,16	0,25
1 X	E16 x 32-G	1 XD	D16 x 32-G	16	32	68	34	16	37	105	5	18,3	16	16	0,30	0,45
3 X	E20 x 42-G	3 XD	D20 x 42-G	20	42	82	41	18	47	129	6	22,8	20	20	0,60	1,00
5 X	E25 x 50-G	5 XD	D25 x 50-G	25	50	108	54	26	55	163	8	28,3	25	25	1,20	2,00
6 X	E30 x 58-G	6 XD	D30 x 58-G	30	58	122	61	29	68	190	8	33,3	30	30	1,85	2,90

Ordering example:

04 X	Ø12	Ø12 Nute DIN
Size/type of joint	Finish bore (H7)	Finish bore (H7) feather keyway acc. to DIN 6885 sheet 1 (JS9)

Plain and needle bearing with quick locking

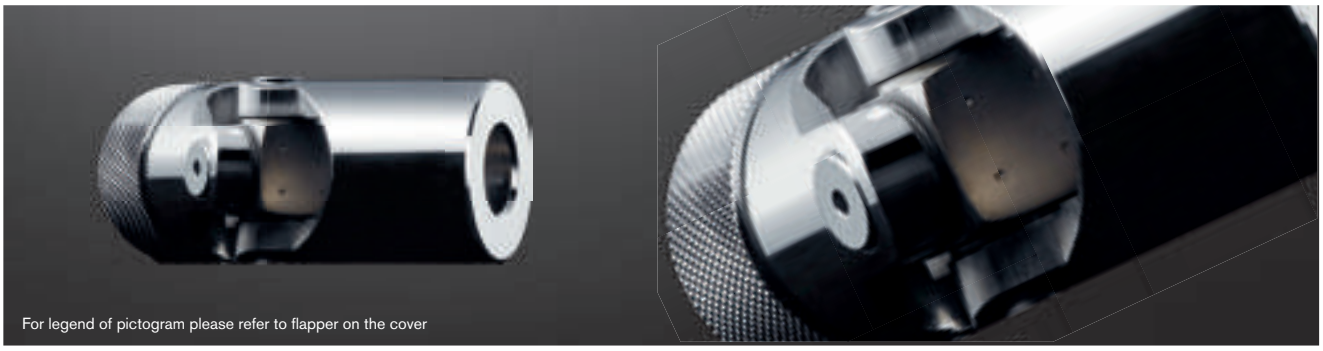



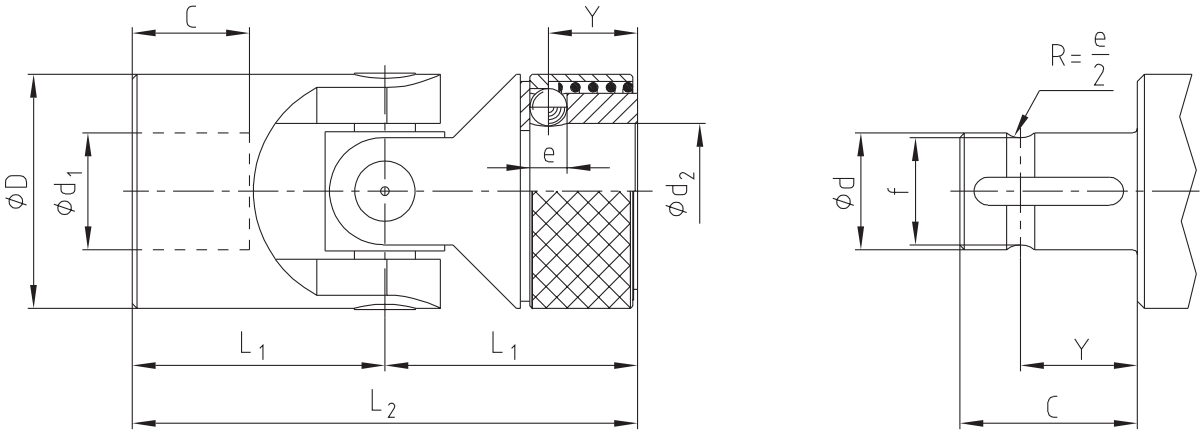

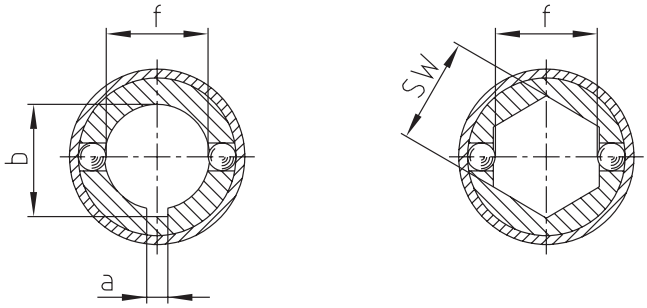

Type GR with plain bearing $n_{max.}$ = 1000 rpm and type HR with needle bearing $n_{max.}$ = 4000 rpm													
Size		Dimensions [mm]											Weight [kg]
GR	HR	d_1, d_2 [H7]	D	L_2	L_1	C	Y	e	f	a [JS9]	b	SW [H10]	
02 GR	-	8	16	52	26	14	9,5	3,5	6,3	2	9,0	8	0,05
03 GR	03 HR	10	22	62	31	17	11,5	4,0	8,7	3	11,0	10	0,12
04 GR	04 HR	12	25	74	37	21	13,5	4,0	11,0	4	13,3	12	0,19
05 GR	05 HR	14	25	74	37	21	13,5	4,0	13,0	5	15,3	14	0,17
1 GR	1 HR	16	32	86	43	24	14,0	6,35	14,8	5	18,3	16	0,34
2 GR	2 HR	18	36	96	48	28	19,0	8,0	16,0	6	20,8	18	0,48
3 GR	3 HR	20	42	108	54	31	19,0	8,0	18,0	6	22,8	20	0,76
4 GR	4 HR	22	45	120	60	34	20,5	10,0	20,0	6	24,8	22	0,97
5 GR	5 HR	25	50	132	66	38	20,5	10,0	23,0	8	28,3	25	1,3
6 GR	6 HR	30	58	166	83	49	25,0	10,0	28,0	8	33,3	30	2,13

Ordering example:	03 HR	d_1 = Ø10	d_2 = Ø10 Nute DIN
	Size and type of joint	Finish bore (H7)	Finish bore (H7) feather keyway acc. to DIN 6885 sheet 1 (JS9)

Protection bushings

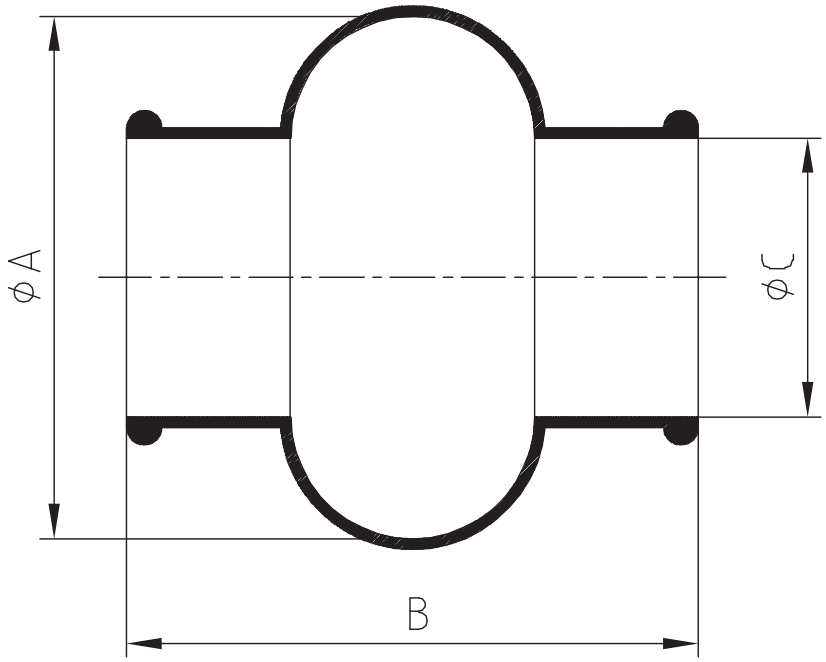

Protection bushings				
Size	Precision joints	A	B	C
M 01	01 G, 01 X	28	34	15
M 02	02 G, 02 X, 02 GR	32	40	16,5
M 03	03 G, 03 H, 03 GA, 03 HA, 03 X, 03 GR, 03 HR	40	45	20,5
M 04	04 G, 04 H, 04 GA, 04 HA, 04 X, 04 GR, 04 HR	48	50	24,5
M 05	05 G, 05 H, 05 GA, 05 HA, 05 GR, 05 HR	52	56	27,5
M 1	1 G, 1 H, 1 GA, 1 HA, 1 X, 1 GR, 1 HR	56	65	30,5
M 2	2 G, 2 H, 2 GA, 2 HA, 2 GR, 2 HR	66	72	35,5
M 3	3 G, 3 H, 3 GA, 3 HA, 3 X, 3 GR, 3 HR	75	82	40,0
M 4	4 G, 4 H, 4 GA, 4 HA, 4 GR, 4 HR	84	95	45,0
M 5	5 G, 5 H, 5 GA, 5 HA, 5 X, 5 GR, 5 HR	92	108	50,0
M 6	6 G, 6 G1, 6 H, 6 H1, 6 GA, 6 HA, 6 X, 6GR, 6 HR	100	122	56,0



Torque measuring technology

Torque measuring shafts
Types and operating description 310

DATAFLEX®
Type 16/10, 16/30, 16/50 312
Type 32/100, 32/300, 32/500 314
Type 42/1000 316
Type 70/3000, 70/5000 318
Type 110/10000, 110/20000 320
Type 140/50000 321
Connecting accessories 322

DATAFLEX® 16 **DATAFLEX® 32** **DATAFLEX® 42** **DATAFLEX® 70** **DATAFLEX® 110** **DATAFLEX® 140**



Properties of torque measuring shafts

DATAFLEX® 16, 32, 42, 70, 110 - High precision with each revolution



With the new size of DATAFLEX® 110 KTR extend their range of precision measuring shafts for bigger torques. Along with the established sizes of DATAFLEX® 16 to DATAFLEX® 75 measuring ranges from 10 Nm to 20,000 Nm are covered.
With the new series the torque is measured using the approved technology of wire strain gauges DMS while processing without contact with a revolution of 24 bit. Thus, the inaccuracy of torque measuring is reduced to less than 0.1 % of the measuring range. By integrating a high-resolution speed sensor the new series combines four measurements in one: Measuring the torque, speed, rotation angle and rotation direction is part of the standard equipment.

DATAFLEX® 140 - Patented technology at top prices



The DATAFLEX® torque measuring shafts size 140 measure the torque without contact and free from wear. Their secret is a patented measuring method sensing twisting of the torsion shaft by light quantity measurement. Here the light is directed through two disks the transparency of which changes proportionately to the torque. The overall electronics are installed in a stationary housing to make sure that no signals have to be transmitted by the rotating shaft and the torque is available completely with a high band width of 16 kHz. This allows to measure and analyze highly dynamic processes accurately.
The analog output values are available both as a voltage signal from 0 - 10 V and as a current signal from 4 - 20 mA. In addition a speed encoder is fitted as a standard providing a signal at a resolution of 60 pulses per revolution.

Couplings adjusted to every application



Matching with all series of DATAFLEX® we recommend to use the servo lamina coupling RADEX®-NC and the steel lamina coupling RADEX®-N. Together they form a compact solution which is easy to integrate while having a high stiffness. Basically it is also possible to use backlash-free, plug-in types of couplings such as ROTEX® GS or to fit an overload coupling.

Product finder of torque measuring shafts

						
Product	**DATAFLEX® 16**	**DATAFLEX® 32**	**DATAFLEX® 42**	**DATAFLEX® 70**	**DATAFLEX® 110**	**DATAFLEX® 140**
Maintenance-free	●	●	●	●	●	●
For rotating applications	●	●	●	●	●	●
Torque range T_{KN} [Nm]	10, 30, 50	100, 300, 500	1000	3000, 5000	10000, 20000	50000
Measuring inaccuracy [% of terminal value]	0,1	0,1	0,1	0,1	0,1	1
Torque output	-10 … 10 V	-10 … 10 V	-10 … 10 V	-10 … 10 V	0 … 10 V	0 … 10 V, 4 … 20 mA
Speed output						
Square wave signal [pulses / rev.]	2 x 360	2 x 720	2 x 720	2 x 450	2 x 720	1 x 60
DC - direct voltage signal [0 .. 10V]	●	●	●	●	●	●
Direction signal	●	●	●	●	●	–
Maximum speed [RPM]	10.000	7.500	6.500	4.000	3.000	2.000
Coupling recommended	RADEX®-NC 20, 25	RADEX®-N42, N60	RADEX®-N80	RADEX®-N90, N115	as specified	as specified
Connection housing DF2	●	●	●	●	●	●

Connection housing DF2 – All Inclusive



The connection housing DF2 can easily be combined with all DATAFLEX® torque measuring shafts disposing of a retainer for top hat rail assembly as well as terminal screws for an easy connection of external devices.
The following features save the purchase of expensive measuring amplifiers and converters:

- The torque output can be filtered over 5 steps so that short torque peaks in the display can be reduced.
- The pulsed outputs of the speed signals can be configured both for 5V (TTL) and 24V (HTL). This makes the outputs compatible with data logging boards and SPS controls.
- In parallel with the pulse signal an integrated frequency voltage converter supplies a DC voltage from 0 – 10 V proportionally to the speed, the scaling of which can be adapted individually. This makes an expensive counter superfluous so that the signal can either be processed as a voltage or displayed.
- A direction signal indicates the rotational direction of the drive (with DATAFLEX® 16, 32, 42, 70 and 110).

DATAFLEX® 16/10, 16/30, 16/50
Torque measuring shafts

For torques up to 50 Nm





General properties				
Type of DATAFLEX®	Torque T_{KN} [Nm]	Supply voltage [V]	Current consumption [mA]	Operating temperature range [°C]
16/10	-10 ... +10			
16/30	-30 ... +30	24 ±4	<100	0 ... 55
16/50	-50 ... +50			

Technical data of torque signal					Technical data of speed signal				
Type of DATAFLEX®	Inaccuracy [1, 2] [%]	Output voltage [V]	Band width [kHz]	Influence of temperature[1] [%/10 °C]	Resolution [pulses/rev.]	Number of channels	Square wave signal[3] [Vss]	Direct voltage signal[3] [V]	Direction signal [3] [V]
16/10									
16/30	<0,1	-10 ... 10	2	0,05	360	2, 90° versetzt	5/24	0 ... 10, skalierbar	5/24
16/50									

Mechanical data of torque measuring shaft										
Type of DATAFLEX®	Static load limit TK max [%] [1]	Breaking load TK break [%] [1]	Max. bending moment [Nm]	Max. radial force [N]	Max. axial force [kN]	Weight [kg]	Torsion spring stiffness C_T [Nm/rad]	Twisting angle with T_{KN} [°]	Mass moment of inertia [kgmm²]	Max. speed [rpm]
16/10			1,07	12	1,1		910	0,63		
16/30	150	300	3,2	37	2,3	0,7	2840	0,61	22,6	10000
16/50			5,3	61	3,1		4100	0,7		

Mechanical data of the combination of DATAFLEX® 16 and RADEX®-NC							
Type of DATAFLEX®	Coupling			Mechanical data of the combination			
	Size of RADEX®-NC	Clamping screw M		Mass moment of inertia [kgmm²]	Torsion spring stiffness C_T [Nm/rad]	Weight [kg]	Max. Drehzahl [1/min] [4]
		M	T_A [Nm]				
16/10	20	M6	10	177	860	1,30	
16/30	25	M8	25	416	2600	1,75	7500
16/50					3600	1,75	

[1] Referring to rated torque T_{KN}
[2] Errors in linearity incl. hysteresis
[3] See page 322: with connection housing DF2
[4] Higher speed on request; with high speeds please use coupling hubs balanced.

Ordering example:	DATAFLEX® 16/30	DF2	2 m, 5 m and 10 m	RADEX®-NC 25 EK Ø16/20-Ø16/30
	Type of measuring shaft with measuring range	Connection housing (is required)	Connection cable	If accessories are requested: coupling type, finish bores d/d_1-d/d_2

Components

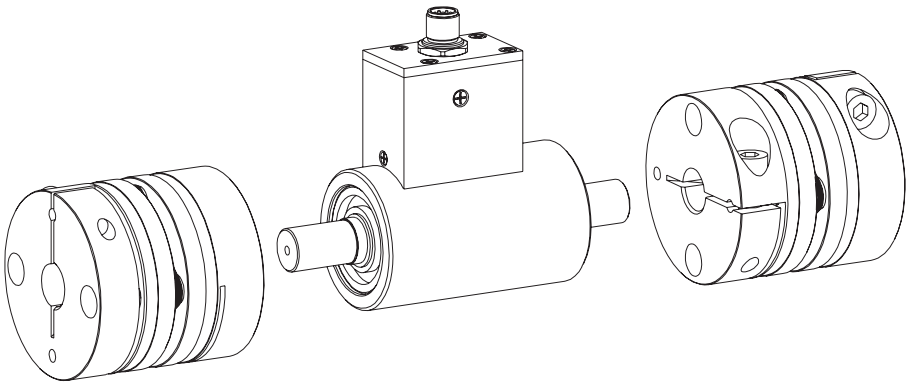

DATAFLEX® 16

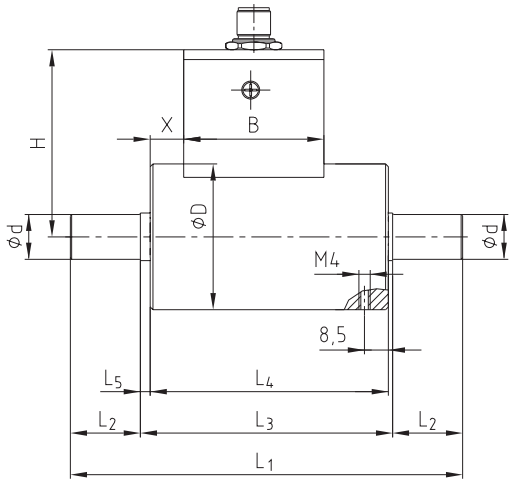

Combination of DATAFLEX® 16 with RADEX®-NC

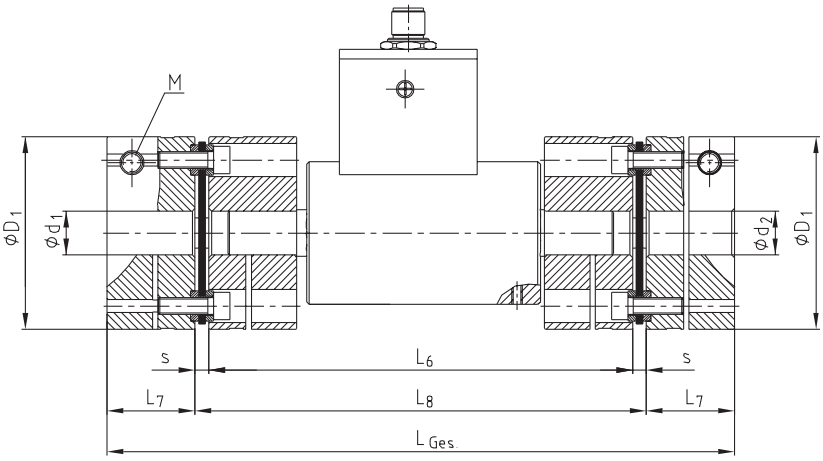

Dimensions [mm] of torque measuring shaft and coupling combination																		
Type of DATAFLEX®	d	D	L_1	L_2	L_3	L_4	L_5	H	B	X	RADEX®-NC Size	D_1	d_1/d_2 max	s	L_6	L_7	L_8	L_{Ges}
16/10	16	52	140	25	90	85	3,5	67	50	12	20	59	25	4	138	24	146	194
16/30											25	70	35	5	154	32	164	228
16/50																		

DATAFLEX® 32/100, 32/300, 32/500
Torque measuring shafts

For torques from 100 to 500 Nm





General properties				
Type of DATAFLEX®	Rated torque T_{KN} [Nm]	Supply voltage [V]	Current consumption [mA]	Operating temperature range [°C]
32/100	-100 ... +100			
32/300	-300 ... +300	24 ±4	<100	0 ... 55
32/500	-500 ... +500			

Technical data of torque signal					Technical data of speed signal				
Type of DATAFLEX®	Inaccuracy [1, 2] [%]	Output voltage [V]	Band width [kHz]	Influence of temperature [1] [%/10 °C]	Resolution [pulses/rev.]	Number of channels	Square wave signal [3] [Vss]	Direct voltage signal [3] [V]	Direction signal [3] [V]
32/100									
32/300	<0,1	-10 ... 10	2	0,05	720	2, 90° offset	5/24	0 ... 10, scalable	5/24
32/500									

Mechanical data of torque measuring shaft										
Type of DATAFLEX®	Static load limit $T_{K\,max}$ [%] [1]	Breaking load TK break [%] [1]	Max. bending moment [Nm]	Max. radial force [N]	Max. axial force [kN]	Weight [kg]	Torsion spring stiffness C_T [Nm/rad]	Twisting angle with T_{KN} [°]	Mass moment of inertia [kgmm²]	Max. speed [rpm]
32/100			11	110	5,0		18000	0,32	219	
32/300	150	300	32	320	10,4	1,9	46000	0,37	221	7500
32/500			53	530	14,6		60000	0,48	224	

Mechanical data of the combination of DATAFLEX® 32 and RADEX®-N								
Type of DATAFLEX®	Coupling				Mechanical data of the combination			
	Size of RADEX®-N	Thread for setscrew			Mass moment of inertia [kgmm²]	Torsion spring stiffness C_T [Nm/rad]	Weight [kg]	Max. speed [RPM] [4]
		G	t	T_A [Nm]				
32/100	42				5900	16000	6,95	7500
32/300	60	M8	20	10	17900	40000	11,65	6700
32/500						49000	11,70	

[1] Referring to rated torque T_{KN}
[2] Errors in linearity incl. hysteresis
[3] See page 322: with connection housing DF2
[4] Higher speed on request

Ordering example:	DATAFLEX® 32/300	DF2	2 m, 5 m and 10 m	RADEX®-N 60 NN Ø32/50NnD Ø32/60NnD
	Type of measuring shaft with measuring range	Connection housing (is required)	Connection cable	In case that accessories are requested: coupling type, finish bores d/d_1-d/d_2

Components

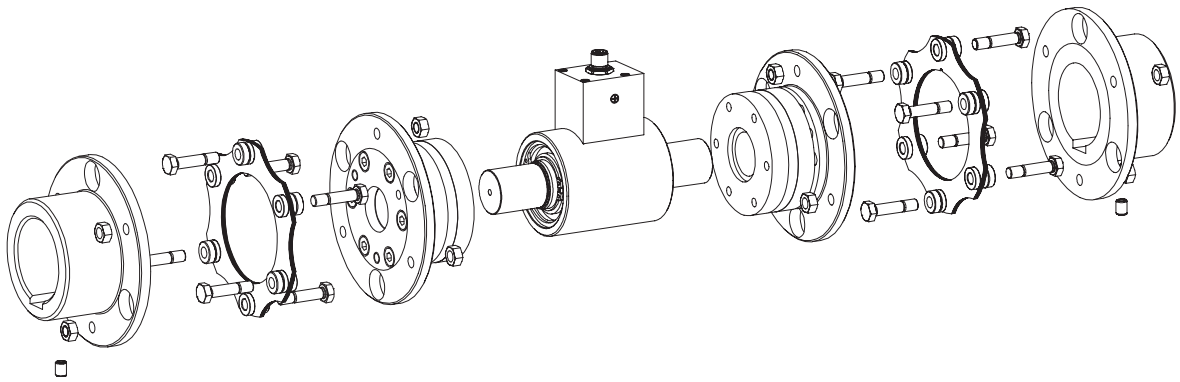

DATAFLEX® 32

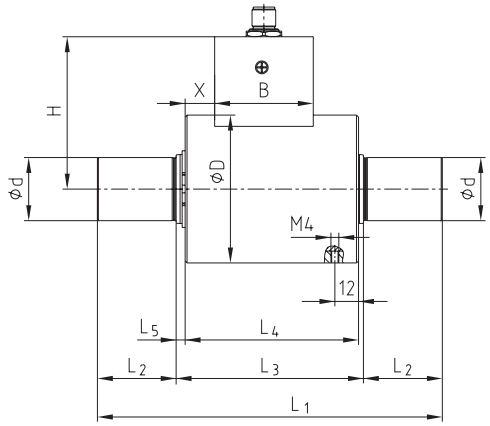

Combination of DATAFLEX® 32 with RADEX®-N

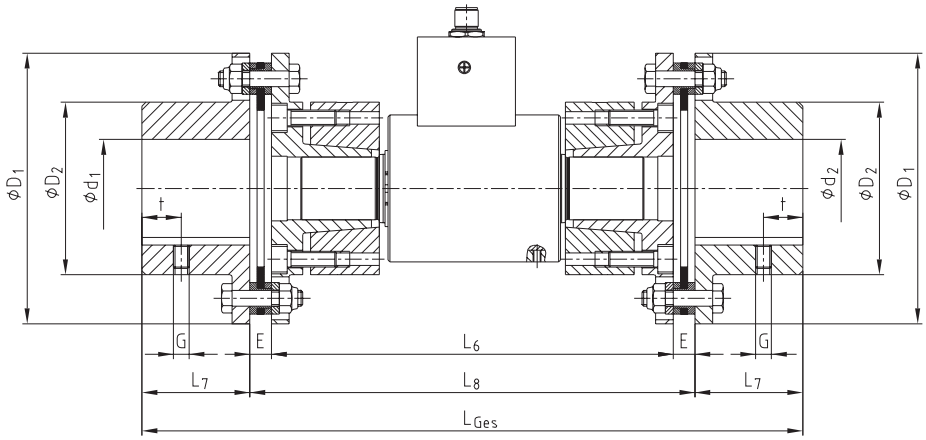

Dimensions [mm] of torque measuring shaft and coupling combination																		
Type of DATAFLEX®	d	D	L_1	L_2	L_3	L_4	L_5	H	B	X	RADEX®-N Size	D_1	D_2	d_1/ d_2 max.	E	L_6	L_7	L_8	L_{Ges}
32/100											42	104	68	42	10	185	45	205	295
32/300	32	75	175	40	95	88	4,5	77,3	50	15	60	138	88	60	11	205	55	227	337
32/500																			

DATAFLEX® 42/1000
Torque measuring shafts

For torques up to 1000 Nm





General properties				
Type of DATAFLEX®	Rated torque T_{KN} [Nm]	Supply voltage [V]	Current consumption [mA]	Operating temperature range [°C]
42/1000	-1000 ... +1000	24 ±4	<100	0 ... 55

Technical data of torque signal					Technical data of speed signal				
Type of DATAFLEX®	Inaccuracy,[2] [%]	Output voltage [V]	Band width [kHz]	Influence of temperature1) [%/10 °C]	Resolution [pulses/rev.]	Number of channels	Square wave signal[3] [Vss]	Direct voltage signal[3] [V]	Direction signal[3] [V]
42/1000	<0,1	-10 ... 10	2	0,05	720	2, 90° offset	5/24	0 ... 10, scalable	5/24

Mechanical data of torque measuring shaft										
Type of DATAFLEX®	Static load limit TK max [%] [1]	Breaking load TK break [%] [1]	Max. bending moment [Nm]	Max. radial force [N]	Max. axial force [kN]	Weight [kg]	Torsion spring stiffness C_T [Nm/rad]	Twisting angle with T_{KN} [°]	Mass moment of inertia [kgmm²]	Max. speed [rpm]
42/1000	150	300	107	780	24	3,43	132000	0,43	710	6500

Mechanical data of the combination DATAFLEX® 42 and RADEX®-N								
Type of DATAFLEX®	Coupling				Mechanical data of the combination			
	RADEX®-N Size	Thread for setscrew			Mass moment of inertia [kgmm²]	Torsion spring stiffness CT [Nm/rad]	Weight [kg]	Max. speed [RPM] [4]
		G	t	T_A [Nm]				
42/1000	80	M10	20	17	61000	107000	23,1	5100

[1] Referring to rated torque T_{KN}
[2] Errors in linearity incl. hysteresis
[3] See page 322: with connection housing DF2
[4] Higher speed on request

Ordering example:	DATAFLEX® 42/1000	DF2	2 m, 5 m and 10 m	RADEX®-N 80 NN Ø42/50NnD Ø42/60NnD
	Type of measuring shaft with measuring range	Connection housing (is required)	Connection cable	In case that accessories are requested: coupling type, finish bores d/d1-d/d2

Components

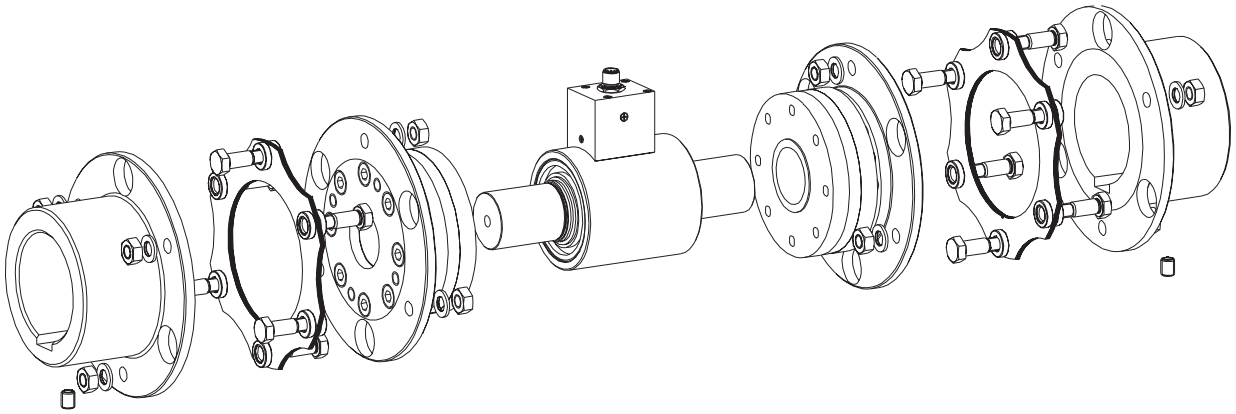

DATAFLEX® 42

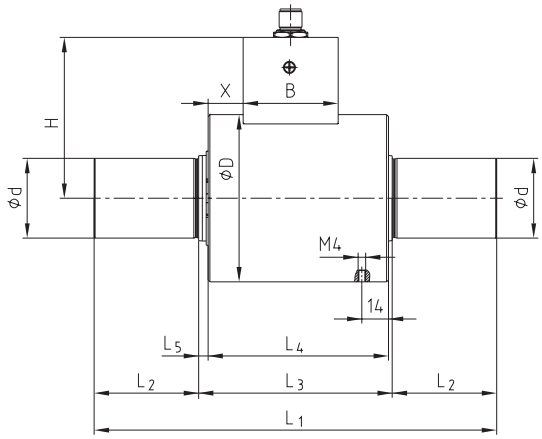

Combination of DATAFLEX® 42 with RADEX®-N

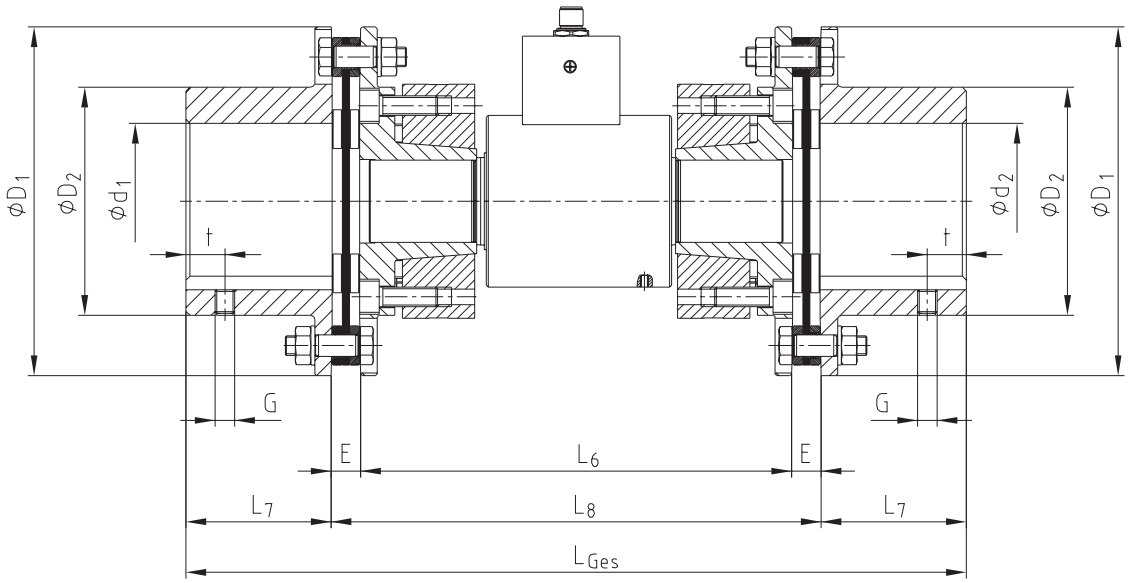

Dimensions [mm] of torque measuring shaft and coupling combination																			
Type of DATAFLEX®	d	D	L_1	L_2	L_3	L_4	L_5	H	B	X	RADEX®-N Size	D_1	D_2	d_1/ d_2 max	E	L_6	L_7	L_8	L_{tptal}
42/1000	42	88	212	55	102	95	5	84,7	50	18,5	80	179	117	80	14	222	75	250	400

DATAFLEX® 70/3000, 70/5000
Torque measuring shafts

For torques from 3000 to 5000 Nm





General properties				
DATAFLEX® type	Rated torque T_{KN} [Nm]	Supply voltage [V]	Current consumption [mA]	Operating temperature range [°C]
70/3000	-3000 … +3000	24 ±4	<100	0 ... 55
70/5000	-5000 … +5000			

Technical data of torque signal					Technical data of speed signal				
DATAFLEX® type	Inaccuracy [1] [%]	Output voltage [V]	Band width [kHz]	Influence of temperature [%/10°C]	Resolution [pulses/rev.]	Number of channels	Square wave signal [2] [Vss]	Direct voltage signal [2] [V]	Direction signal [2] [V]
70/3000	< 0,1	-10 ... 10	2	0,05	450	2, 90° versetzt	5/24	0 ... 10, skalierbar	5/24V
70/5000									

Mechanical data of torque measuring shaft										
DATAFLEX® type	Static load limit $T_{K\,max}$ [%] [1]	Breaking load T_K Breaking [%] [1]	Max. bending torque [Nm]	Max. radial force [N]	Max. axial force [kN]	Weight [kg]	Torsion spring stiffness C_T [Nm/rad]	Twisting angle with T_{KN} [°]	Mass moment of inertia [kgmm²]	Max. speed [rpm]
70/3000	150	300	320	1700	48	12,30	395000	0,44	7200	4000
70/5000			520	2800	66	12,45	500000	0,57	7300	

Mechanical data of the combination DATAFLEX® 70 and RADEX®-N								
DATAFLEX® Typ	Coupling				Mechanical data of the combination			
	RADEX®-N size	Thread for setscrew			Mass moment of inertia [kgmm²]	Torsion spring stiffness C_T [Nm/rad]	Weight [kg]	Max. speed [rpm] [4]
		G	t	T_A [Nm]				
70/3000	90	M12	25	40	155200	283000	44,7	4000
70/5000	115		30		470000	389000	77,6	3400

[1] Referring to rated torque T_{KN}
[2] See page 322: with connection housing DF2
[3] Higher speed on request

Ordering example:	DATAFLEX® 70/5000	DF2	2 m, 5 m and 10 m	RADEX®-N 115 NN Ø65/60NnD Ø65/70NnD
	Type of measuring shaft with measuring range	Connection housing (is required)	Connection cable	In case that accessories are requested: coupling type, finish bores d/d_1-d/d_2

Components

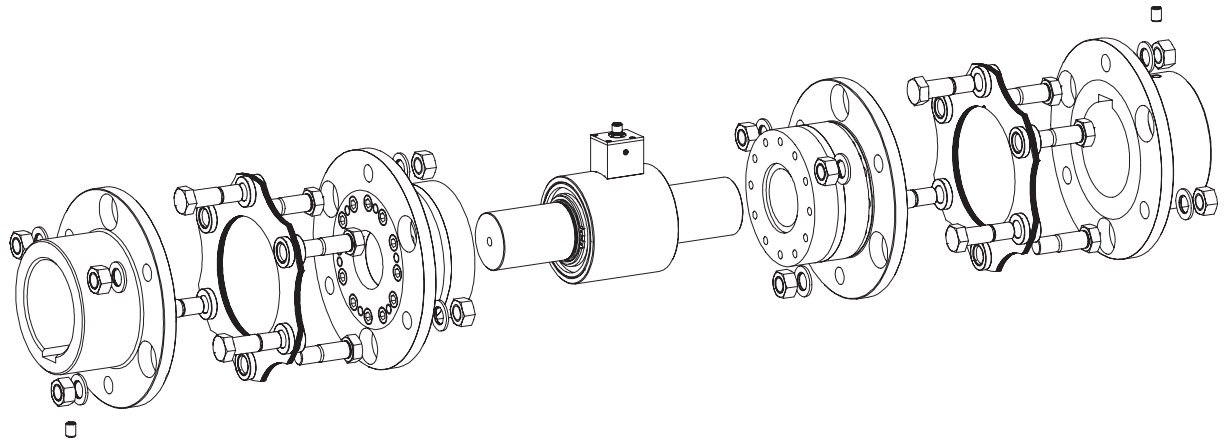

DATAFLEX® 70

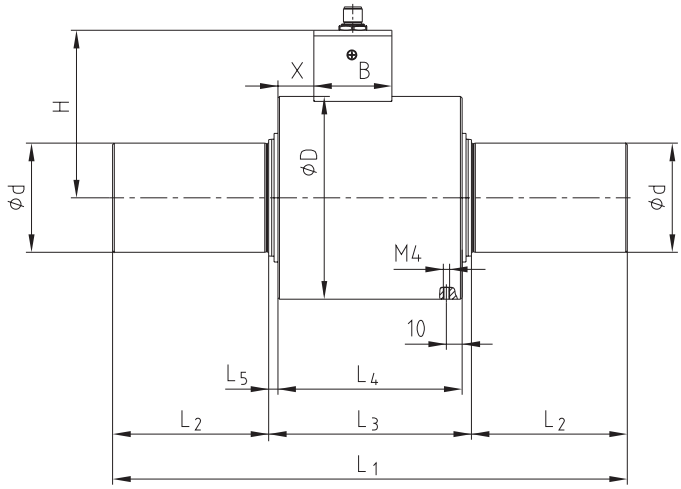

Combination of DATAFLEX® 70 with RADEX®-N

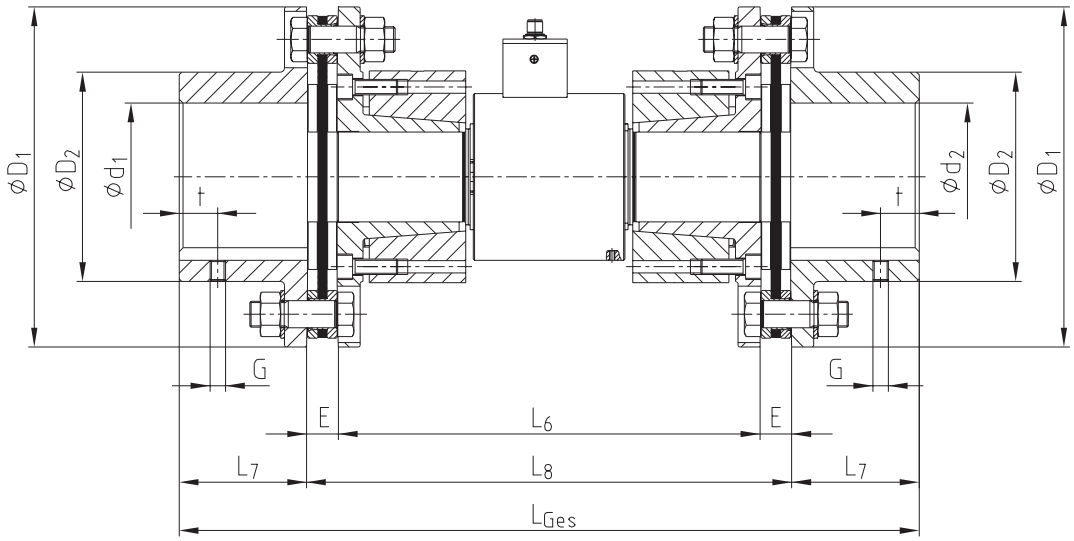

Dimensions [mm] of torque measuring shaft and coupling combination																
DATAFLEX® type	d	D	L_1	L_2	L_3	L_4	L_5	RADEX®-N Size	D_1	D_2	d_1/d_2 max	E	L_6	L_7	L_8	L_{tptal}
70/3000	70	130	330	100	130	118	6	N90	210	132	90	15	330	80	360	520
70/5000								N115	265	163	115	23		100	376	576

DATAFLEX® 110/10000, 110/20000
Torque measuring shafts

For torques from 10000 to 20000 Nm





DATAFLEX® 110

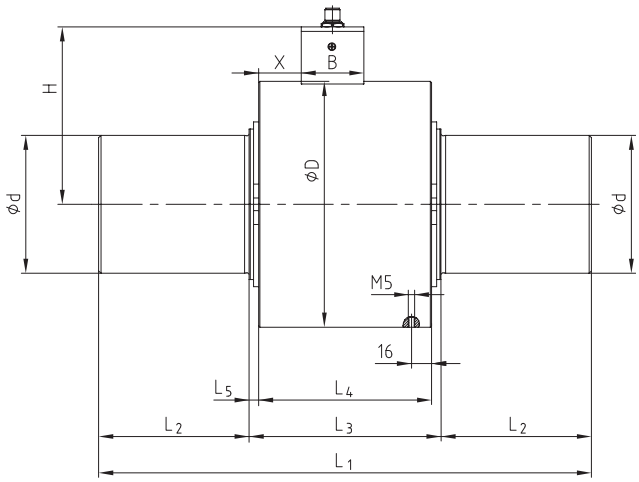

General properties				
Type of DATAFLEX®	Rated torque T_{KN} [Nm]	Supply voltage [V]	Current consumption [mA]	Operating temperature range [°C]
110/10000	- 10000 ... + 10000	24 ±4	<100	0 ... 55
110/20000	- 20000 ... + 20000			

Technical data of torque signal					Technical data of speed signal				
Type of DATAFLEX®	Inaccuracy [1] [%]	Output voltage [V]	Band width [kHz]	Influence of temperature [1] [%/10 °C]	Resolution [pulses/rev.]	Number of channels	Square wave signal [2] [Vss]	Direct voltage signal [2] [V]	Direction signal [2] [V]
110/10000	< 0,1	-10 ... +10	2	0,05	720	2, 90° versetzt	5/24	0 ... 10, scalable	5/24
110/20000									

Mechanical data of torque measuring shaft										
Type of DATAFLEX®	Static limit load T_K max [%] [1]	Breaking load T_K break [%] [1]	Max. bending torque [Nm]	Max. radial force [N]	Max. axial force [kN]	Weight [kg]	Torsion spring stiffness C_T [Nm/rad]	Twist angle with T_{KN} [°]	Mass moment of inertia [kgmm²]	Max. speed [rpm]
110/10000	150	300	1033	4700	106	35,72	2270000	0,25	0,0562	3000
110/20000	150	300	2037	9300	166	36,20	3550000	0,32	0,0569	3000

Dimensions [mm] of torque measuring shaft							
Type of DATAFLEX®	d	D	L_1	L_2	L_3	L_4	L_5
110/10000	110	196	393	120	153	138	7,5
110/20000	110	196	393	120	153	138	7,5

[1] Referring to rated torquet T_{KN}
[2] See page 322: with connection housing DF2
[3] Higher speed on request

Ordering example:

DATAFLEX® 110/10000	DF2	2 m, 5 m and 10 m
Type of measuring shaft with measuring range	Connection housing (is required)	Connection cable

DATAFLEX® 140/20000, 140/50000
Torque measuring shafts

For torques up to 50000 Nm

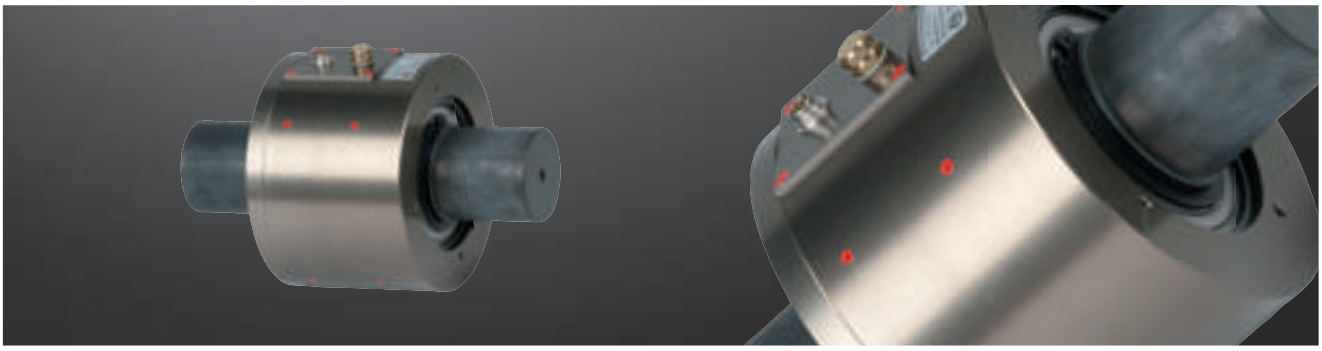



DATAFLEX® 140

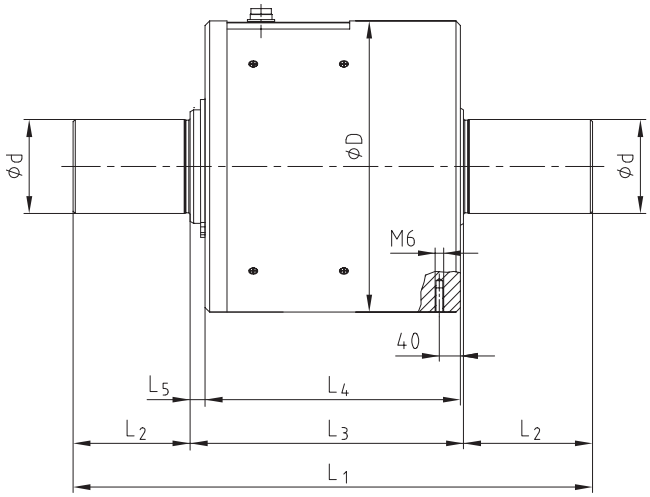

General properties				
Type of DATAFLEX®	Rated torque T_{KN} [Nm]	Supply voltage [V]	Current consumption [mA]	Operating temperature range [°C]
140/20000	-20000 ... +20000	24 ±4	<100	0 ... 55
140/50000	-50000 ... +50000			

Technical data of torque signal						Technical data of speed signal				
Type of DATAFLEX®	Inaccuracy [1] [%]	Output voltage [V]	Output current [mA]	Band width [kHz]	Influence of temperature [1] [%/10 °C]	Resolution [pulses/rev.]	Number of channels	Square wave signal [2] [Vss]	Direct voltage signal[2] [V]	Direction signal[2] [V]
140/20000	<±0,5	0 ... 10	4 ... 20	16	0,5	60	1	5/24	0 ... 10, scalable	–
140/50000										

Mechanical data of torque measuring shaft										
Type of DATAFLEX®	Static load limit T_K max [%] [1]	Breaking load T_K break [%] [1]	Max. bending moment [Nm]	Max. radial force [N]	Max. axial force [kN]	Weight [kg]	Torsion spring stiffness C_T [Nm/rad]	Twist angle with T_{KN} [°]	Mass moment of inertia [kgmm2]	Max. speed [rpm]
140/20000	150	300	2750	8000	100	73,9	3935000	0,30	170000	2000
140/50000			5500	16000	160	76,5	6750000	0,42	175000	

Dimensions [mm] of torque measuring shaft							
Type of DATAFLEX®	d	D	L_1	L_2	L_3	L_4	L_5
140/20000	140	280	486	140	206	191	13
140/50000							

[1] Referring to rated torque T_{KN}
[2] See page 322: with connection housing DF2

Ordering example:	DATAFLEX® 140/50000	DF2	2 m, 5 m and 10 m
	Type of measuring shaft with measuring range	Connection housing (is required)	Connection cable

Connection housing DF2 and connection cable

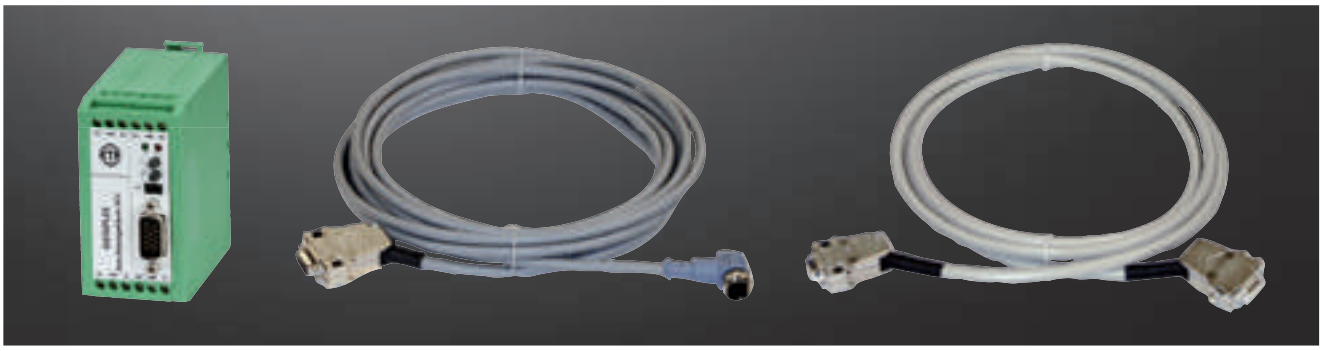

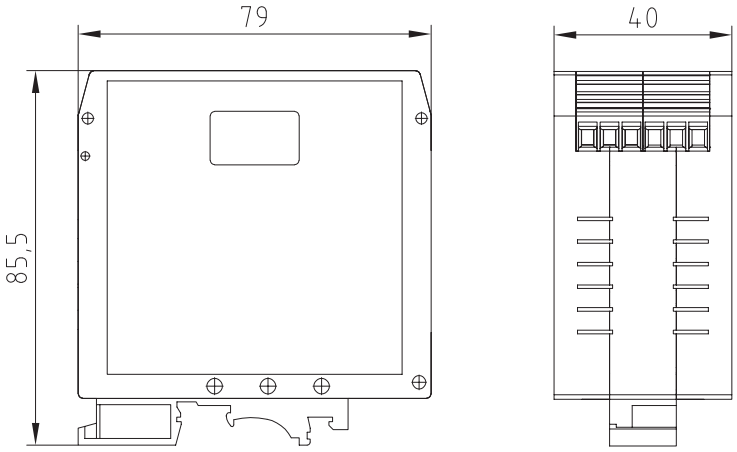

Connection cable and connection housing DF2							
Spider type	Operation	DATAFLEX 16	DATAFLEX 32	DATAFLEX 42	DATAFLEX 70	DATAFLEX 110	DATAFLEX 140
Connections DF2							
Input operating voltage							
24V	Supply voltage +	24 V DC ± 4V / 100mA max.					
GND	Supply voltage -						
Output of torque							
M-U	Voltage output +	-10 V … 10V					0 V … 10 V
GND	Mass of torque output						
M-I	Current output	-	-	-	-	-	4 mA … 20 mA
Pulsed output of speed							
N1	Pulsed output speed track 1	HTL, TTL (24V, 5V, 360 Imp./U.)	HTL, TTL (24V, 5V, 720 Imp./U.)	HTL, TTL (24V, 5V, 720 Imp./U.)	HTL, TTL (24V, 5V, 450 Imp./U.)	HTL, TTL (24V, 5V, 720 Imp./U.)	HTL, TTL (24V, 5V, 1 x 60 Imp./U.)
GND	Mass of pulsed output						
N2	Pulsed output speed track 2	HTL, TTL (24V, 5V, 360 Imp./U.)	HTL, TTL (24V, 5V, 720 Imp./U.)	HTL, TTL (24V, 5V, 720 Imp./U.)	HTL, TTL (24V, 5V, 450 Imp./U.)	HTL, TTL (24V, 5V, 720 Imp./U.)	–
Speed of direct voltage output							
R/L	Direction signal speed	HTL, TTL (24V, 5V, CW = 1)					–
GND	Mass of direct voltage output speed						
N-U	Voltage output speed	0 V … 10 V (scalable)					
Other connections / control elements							
T1	Sensor T1 connection	External sensor connection T1					
L1, L2	Signal LEDs	Condition monitoring					
T1, T2	Sensor T1, T2	Sensor for programming					
TP	Switch low pass	Filter for speed signal to be set in four stages					
Connection cable							
Lengths of connection cable		2, 5, 10 m, other lengths on request					

Notes

Summary of literature

No matter if a perfect drive, a brake that takes effect, space-saving cooling or accurate hydraulics is required, if on land, by sea or at an airy height - KTR's product portfolio is just as manifold as its applications. The following catalogues and leaflets provide for a survey. Available at www.ktr.com

Product catalogues









Industry leaflets





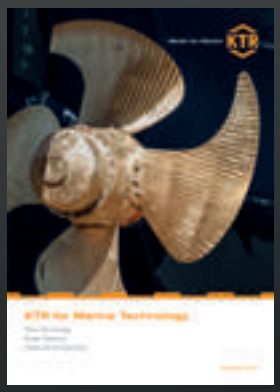









ATEX leaflet



Company leaflet



KTR Germany:

Headquarter:
KTR Systems GmbH
Carl-Zeiss-Straße 25
D-48432 Rheine
Phone: +49 5971 798-0
Fax: +49 5971 798-698 or 798-450
E-Mail: mail@ktr.com
Internet: www.ktr.com

KTR Brake Systems GmbH
Competence Center for Brake Systems
Zur Brinke 14
D-33758 Schloß Holte-Stukenbrock
Phone: +49 5207 99161-0
Mobile: +49 175 2650033
Fax: +49 5207 99161-11

Leiter Vertrieb Bremsen Wind
Jürn Edzards, Dipl.-Ing. (FH)
Zur Brinke 14
D-33758 Schloß Holte-Stukenbrock
Phone: +49 5207 99161-0
Mobile: +49 175 2650033
E-mail: j.edzards@ktr.com

Leiter Vertrieb Bremsen Industrie
Thomas Wienkotte, Dipl.-Ing. (FH)
Peter-Schumacher-Straße 102
D-50171 Kerpen
Phone: +49 2237 971796
Mobile: +49 172 5859448
E-mail: t.wienkotte@ktr.com

Außendienst Norddeutschland für Hydraulik-Komponenten
Gunnar Ehlers
Finkenstieg 4b
21629 Neu Wulmstorf
Mobile: +49 174 3301536
E-mail: g.ehlers@ktr.com

Außendienst Bayern, Baden-Württemberg und Österreich für Hydraulik-Komponenten
Klaus-Peter Sprödhuber
Hussengutstr.55
95445 Bayreuth
Phone: +49 921 16388991
Mobile: +49 172 1096496
E-Mail: k.sproedhuber@ktr.com

Schleswig-Holstein, Nord-Niedersachsen, Hamburg, Bremen
Martin Lau, Maschinenbautechniker
KTR, Ingenieurbüro Hamburg
Geschwister-Scholl-Allee 44
25524 Itzehoe
Phone: +49 4821 4050812
Mobile: +49 172 5310014
E-Mail: m.lau@ktr.com

NRW: Reg.-Bez.: Düsseldorf
Günter Enk, Dipl.-Ing.
KTR Ingenieurbüro Bocholt
Stormstraße 35
46397 Bocholt
Phone: +49 2871 227488
Mobile: +49 172 5355704
E-Mail: g.enk@ktr.com

Emsland, Mitte- und Süd-Niedersachsen, Ostwestfalen
Rainer Lüttmann
KTR Systems GmbH
Carl-Zeiss-Straße 25
48432 Rheine
Phone: +49 5971 798-340
Mobile: +49 172 5322164
E-Mail: r.luettmann@ktr.com

Ruhrgebiet, Siegerland, Hessen-Nord
René Pottmann, Maschinenbautechniker
KTR Ingenieurbüro Dortmund
Lindemannstraße 9
44137 Dortmund
Phone: +49 231 91259060
Mobile: +49 162 2186045
E-Mail: r.pottmann@ktr.com

Hessen, Rheinland-Pfalz, Saarland
Martin Dietrich, Ingenieur
KTR Ingenieurbüro Frankfurt
Im Mühlahl 6
61203 Reichelsheim
Phone: +49 6035 2077284
Mobile: +49 172 5329968
E-Mail: m.dietrich@ktr.com

Berlin, Mecklenburg-Vorpommern Südost, Sachsen-Anhalt, Brandenburg Thüringen Nord, Sachsen
Harald Scholze, Dipl.-Ing. (TU)
KTR Ingenieurbüro Wittenberg
August-Bebel-Straße 7
06886 Lutherstadt-Wittenberg
Phone: +49 3491 663526
Mobile: +49 172 5329887
E-Mail: h.scholze@ktr.com

Baden-Württemberg Nord
Eberhard Maier, Dipl.-Ing. (FH)
Hortensienweg 1
70374 Stuttgart, Sommerrain
Phone: +49 7116 5842957
Mobile: +49 172 5355056
E-Mail: e.maier@ktr.com

Baden-Württemberg Süd
Jochen Glöckler, Maschinenbautechniker
KTR Ingenieurbüro Balingen
Hölzlestraße 44
72336 Balingen
Phone: +49 7433 91381
Mobile: +49 172 5310049
E-Mail: j.gloeckler@ktr.com

Bayern-Nord, Thüringen Süd
Eduard Schadly, Ingenieur
KTR Ingenieurbüro Prebitz
In der Heide 27
95473 Prebitz-Engelmannsreuth
Phone: +49 9270 9666
Mobile: +49 172 5329967
E-Mail: e.schadly@ktr.com

Bayern-Süd, Baden-Württemberg Ost
Peter Benkard, Dipl.-Ing. (FH)
KTR Ingenieurbüro Adelsried
Am Mittelfeld 13
86477 Adelsried
Phone: +49 8293 960504
Mobile: +49 172 5313059
E-Mail: p.benkard@ktr.com

For all representatives and sales partners please refer to www.ktr.com.



KTR worldwide:

Algeria
KTR Alger
Algeria Business Center -
Pins Maritimes
DZ-16130 Alger Mohammadia
Phone: +213 661 92 24 00
E-mail: ktr-dz@ktr.com

Belgium/Luxemburg
KTR Benelux B. V. (Bureau Belgien)
Blancefloerlaan 167/22
B-2050 Antwerpen
Phone: +32 3 2110567
Fax: +32 3 2110568
E-mail: ktr-be@ktr.com

Brazil
KTR do Brasil Ltda.
Rua Jandaia do Sul 471 -
Bairro Emiliano Perneta
Pinhais - PR - Cep: 83324-040
Phone: +55 41 36 69 57 13
Fax: +55 41 36 69 57 13
E-mail: ktr-br@ktr.com

Chile
KTR Systems Chile SpA
Calle Bucarest 17
Oficina 33 Providencia
Santiago de Chile
Phone: +56 23 22 46 674
Mobile: +56 9 44 75 57 02
E-mail: ktr-cl@ktr.com

China
KTR Power Transmission Technology
(Shanghai) Co. Ltd.
Building 1005, ZOBON Business Park
999 Wangqiao Road
Pudong
Shanghai 201201
Phone: +86 21 58 38 18 00
Fax: +86 21 58 38 19 00
E-mail: ktr-cn@ktr.com

Czech Republic
KTR CR, spol. s. r. o.
Olomoucká 226
CZ-569 43 Jevícko
Phone: +420 461 325 014
E-mail: ktr-cz@ktr.com

Finland
KTR Finland OY
Tiistinniityntie 4
SF-02230 Espoo
PL 23
SF-02231 Espoo
Phone: +358 2 07 41 46 10
Fax: +358 2 07 41 46 19
E-mail: ktr-fi@ktr.com

France
KTR France S.A.R.L.
46–48 Chemin de la Bruyère
F-69570 Dardilly
Phone: +33 478 64 54 66
Fax: +33 478 64 54 31
E-mail: ktr-fr@ktr.com

India
KTR Couplings (India) Pvt. Ltd.,
T-36 / 37 / 38, MIDC Bhosari
Pune 411026
Phone: +91 20 27 12 73 22
Fax: +91 20 27 12 73 23
E-mail: ktr-in@ktr.com

Italy
KTR Systems GmbH
Sede Secondaria Italia
Via Giovanni Brodolini, 8
I – 40133 Bologna (BO)
Phone: +39 051 613 32 32
Fax: +39 02 700 37 570
E-mail: ktr-it@ktr.com

Japan
KTR Japan Co., Ltd.
Toei Bldg.2F, 6-1-8 Motomachi-dori
Chuo-ku, Kobe
650-0022 Japan
Phone: +81 7 89 54 65 70
Fax: +81 7 85 74 03 10
E-mail: ktr-jp@ktr.com

KTR Japan – Tokyo Office
1-11-6, Higashi-Ueno, Taito-Ku,
Tokyo 110-0015 Japan
(Takeno-building, 5F)
Japan
Phone: +81 3 58 18 32 07
Fax: +81 3 58 18 32 08

Korea
KTR Korea Ltd.
101, 978-10, Topyung-Dong
Guri-City, Gyeonggi-Do
471-060 Korea
Phone: +82 3 15 69 45 10
Fax: +82 3 15 69 45 25
E-mail: ktr-kr@ktr.com

Netherlands
KTR Benelux B. V.
Postbus 87
NL-7550 AB Hengelo (O)
Oosterveldsingel 3
NL-7558 PJ Hengelo (O)
Tel.: +31 74 2553680
Fax: +31 74 2553689
E-mail: ktr-nl@ktr.com

Norway
KTR Systems Norge AS
Fjellbovegen 13
N-2016 Frogner
Phone: +47 64 83 54 90
Fax: +47 64 83 54 95
E-mail: ktr-no@ktr.com

Poland
KTR Polska Sp. z o.o.
ul. Czerwone Maki 65
PL–30-392 Kraków
Phone: +48 12 267 28 83
Fax: +48 12 267 07 66
E-mail: ktr-pl@ktr.com

KTR Steel Construction Sp. z o.o.
ul. Kolejowa 1
46-040 Ozimek
Phone: +48 77 402 68 50
Fax: +48 77 465 11 36
E-mail: ks.ozimek@ks.com.pl

Russia
KTR RUS LLC
6 Verhnii Pereulok 12
Litera A, Office 229
194292 St. Petersburg
Phone: +7 812 383 51 20
Fax: +7 812 383 51 25
E-mail: ktr-ru@ktr.com
Internet: www.ktr.ru

South Africa
KTR Couplings SA (Pty) Ltd.
28 Spartan Road, Kempton Park,
GautengSpartan Ext. 21
Phone: +27 11 281 3801
Fax: +27 11 281 3812
E-mail: ktr-za@ktr.com

Spain
KTR Systems GmbH
Estartetxe, n° 5–Oficina 218
E-48940 Leioa (Vizcaya)
Phone: +34 9 44 80 39 09
Fax: +34 9 44 31 68 07
E-mail: ktr-es@ktr.com

Sweden
KTR Sverige AB
Box 742
S-191 27 Sollentuna
Phone: +46 86 25 02 90
Fax: +46 86 25 02 99
E-mail: info.se@ktr.com

Switzerland
KTR Systems Schweiz AG
Bahnstr. 60
CH-8105 Regensdorf
Phone: +41 4 33 11 15 55
Fax: +41 4 33 11 15 56
E-mail: ktr-ch@ktr.com

Taiwan
KTR Taiwan Ltd.
No.: 30-1, 36 Rd
Taichung Industry Zone
Taichung City
407 Taiwan (R. O. C.)
Phone: +886 4 23 59 32 78
Fax: +886 4 23 59 75 78
E-mail: ktr-tw@ktr.com

Turkey
KTR Turkey
Güç Aktarma Sistemleri San. ve Tic. Ltd.
Sti.
Kayışdagı Cad. No: 117/2
34758 Atasehir -İstanbul
Phone: +90 216 574 37 80
Fax: +90 216 574 34 45
E-mail: ktr-tr@ktr.com

United Kingdom
KTR U.K. Ltd.
Robert House
Unit 7, Acorn Business Park
Woodseats Close
Sheffield
United Kingdom, S8 0TB
Phone: +44 11 42 58 77 57
Fax: +44 11 42 58 77 40
E-mail: ktr-uk@ktr.com

USA
KTR Corporation
122 Anchor Road
Michigan City, Indiana 46360
Phone: +1 2 19 8 72 91 00
Fax: +1 2 19 8 72 91 50
E-mail: ktr-us@ktr.com



04/17 - Subject to technical modifications, errors excepted



Headquarter
KTR Systems GmbH
Carl-Zeiss-Str. 25
D-48432 Rheine
Phone: +49 5971 798-0
Fax: +49 5971 798-698 or 798-450
E-mail: mail@ktr.com
Internet: www.ktr.com

Made for Motion KTR

Legend of pictograms



Torsionally rigid



Light-weight



Protected against corrosion



Torsionally flexible

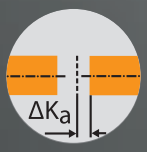

Axial compensation



Electrically insulating



Highly flexible



Angular compensation



Maximum speed



Damping vibrations



Radial compensation



No eddy current losses



Axial plug-in



Shiftable at standstill



Torque limiter slipping



Consider shaft distance



Double-cardanic



Torque limiter with synchronous ratching



Relatively short shaft distance



Radial disassembly

Easy to service



Torque limiter with idle rotation type



Maximum operating temperature



Standard drop-out center lengths available



Hardened surface



High speeds



Available in accordance with API



Accuracy X%



Backlash-free



Complying with ATEX
For details refer to our ATEX leaflet



Consider axial displacement



Shear type, separating, slipping



Maintenance-free

Certificates and Approvals

Being one of the first companies in the range of drive technology, KTR was certified in accordance with DIN EN ISO 9001 already in 1993.

Currently KTR products have been approved by numerous societies for standardization and classification being of international significance. Individual approvals by other societies can be implemented on request without fail.

